COMMITTEE WS-014

DR AS/NZS 3500.2:2017 Project ID: 104080-S1

Draft for Public Comment Australian/New Zealand Standard

LIABLE TO ALTERATION—DO NOT USE AS A STANDARD

BEGINNING DATE FOR COMMENT:	**5 October 2017**
CLOSING DATE FOR COMMENT:	**7 December 2017**

Important:
This PDF document comprises Public Comment DR AS/NZS 3500.2:2017 and an additional reference copy that has been prepared using an automated tool to indicate key differences between the current edition of AS/NZS 3500.2:2015 (as amended) and Public Comment DR AS/NZS 3500.2:2017. Standards Australia Limited accepts no responsibility arising out of or in connection with the reference copy. Standards Australia Limited does not warrant or represent that the differences indicated in the reference copy are accurate or complete or that the reference copy should be relied on for any particular purpose.
Readers should make their own assessment of the differences between the current edition of AS/NZS 3500.2:2015 (as amended) and Public Comment DR AS/NZS 3500.2:2017.
Public Comment DR AS/NZS 3500.2:2017 is the official version for comment.

Plumbing and drainage
Part 2: Sanitary plumbing and drainage
(Revision of AS/NZS 3500.2:2015)

Draft for Public Comment
Australian/New Zealand Standard

The committee responsible for the issue of this draft comprised representatives of organizations interested in the subject matter of the proposed Standard. These organizations are listed on the inside back cover.

Comments are invited on the technical content, wording and general arrangement of the draft.

To submit comments on this document you need to register on the Standards Hub Website at https://hub.standards.org.au/hub/public/listOpenCommentingPublication.action

Instructions and examples of comment submission are available on this site.

Comment must be via Hub. Any emails or forms sent to us by fax or mail will not be considered by the Committee when it reviews the Public Comment received.

Please place relevant clause numbers beside each comment.

Editorial matters (i.e. spelling, punctuation, grammar etc.) will be corrected before final publication.

The coordination of the requirements of this draft with those of any related Standards is of particular importance and you are invited to point out any areas where this may be necessary.

Please provide supporting reasons and suggested wording for each comment. Where you consider that specific content is too simplistic, too complex or too detailed please provide an alternative.

If the draft is acceptable without change, an acknowledgment to this effect would be appreciated.

Once you have registered and submitted your comments via the online form, your comments are automatically submitted to the committee for review.

Normally no acknowledgment of comment is sent. All comments received via the Standards Hub Website by the due date will be reviewed and considered by the relevant drafting committee. We cannot guarantee that comments submitted in other forms will be considered along with those submitted via the Standards Hub online form. Where appropriate, changes will be incorporated before the Standard is formally approved.

If you know of other persons or organizations that may wish to comment on this draft Standard, could you please advise them of its availability. Further copies of the draft are available from the Publisher SAI Global at *http://www.saiglobal.com/*

For information regarding the development of Standards contact:

Standards Australian Limited
GPO Box 476
Sydney NSW 2001
Phone: 02 9237 6000
Email: mail@standards.org.au
Website: www.standards.org.au

Standards New Zealand
PO Box 1473 Wellington 6140
Freephone: 0800 782 632
Phone: (04) 498 5900
Email: enquries@standards.govt.nz
Website: www.standards.govt.nz

For the sales and distribution of Standards including Draft Standards for public comment contact:

SAI Global Limited
Phone: 13 12 42
Email: sales@saiglobal.com
Website: www.saiglobal.com

Draft for Public Comment

STANDARDS AUSTRALIA/STANDARDS NEW ZEALAND

Committee WS-014—Plumbing and Drainage

Subcommittee WS-014-02—Plumbing and Drainage—Sanitary Plumbing

DRAFT

Australian/New Zealand Standard

Plumbing and drainage

Part 2: Sanitary plumbing and drainage

Revision of AS/NZS 3500.2:2015

To be AS/NZS 3500.2:201X

Comment on the draft is invited from people and organizations concerned with this subject. It would be appreciated if those submitting comment would follow the guidelines given on the inside front cover.

Important: Please read the instructions on the inside cover of this document for the procedure for submitting public comments

This document is a draft **Australian/New Zealand** Standard only and is liable to alteration in the light of comment received. It is not to be regarded as an **Australian/New Zealand** Standard until finally issued as such by Standards Australia/Standards New Zealand.

PREFACE

This Standard was prepared by the Joint Standards Australia/Standards New Zealand Committee WS-014, Plumbing and Drainage, to supersede AS/NZS 3500.2:2015.

The objective of this Standard is to provide installers with solutions to conform with—

(a) the National Construction Code (NCC), Volume Three: Plumbing Code of Australia (PCA); and

(b) the New Zealand Building Code (Clause G13 Foul water).

This Standard is part of a series for plumbing and drainage, as follows:

AS/NZS		
3500	Plumbing and drainage	
3500.0	Part 0:	Glossary of terms
3500.1	Part 1:	Water services
3500.2	Part 2:	Sanitary plumbing and drainage (this Standard)
3500.3	Part 3:	Stormwater drainage
3500.4	Part 4:	Heated water services

This revision includes changes to align the Standard with the NCC, Volume Three, Plumbing Code of Australia (PCA).

Some materials and products used in a sanitary plumbing and drainage system are provided with instructions for installation and use. While not a requirement of this Standard, or acceptable as an alternative to the requirements of this Standard, conformance with these instructions generally ensures that—

(i) the material or product is fit for the application;

(ii) the performance of the system is not degraded;

(iii) the durability of the material or product is not impaired; and

(iv) the manufacturer's warranty remains valid.

PROVISION FOR REVISION

This Standard necessarily deals with existing conditions, but is not intended to discourage innovation or to exclude materials, equipment and methods, which may be developed in future. Revisions will be made from time to time in view of such developments and amendments to this edition will be made only when absolutely necessary.

The terms 'normative' and 'informative' have been used in this Standard to define the application of the appendix to which they apply. A 'normative' appendix is an integral part of a Standard, whereas an 'informative' appendix is only for information and guidance.

Statements expressed in mandatory terms in notes to figures and tables are deemed to be requirements of this Standard.

Notes used in this Standard are of an advisory nature only and are used to give explanation or guidance to the user on either recommended considerations or technical procedures, or to provide an informative cross-reference to other documents or publications. Notes to clauses in this Standard do not form a mandatory part for conformance with this Standard.

This Standard includes a commentary on some of the clauses. The commentary directly follows the relevant clause, is designated by 'C' preceding the clause number and is printed in italics in a box. The commentary is for information and guidance and does not form part of the Standard.

CONTENTS

Page

STANDARDS AUSTRALIA/STANDARDS NEW ZEALAND

Australian/New Zealand Standard

Plumbing and drainage

Part 2: Sanitary plumbing and drainage

SECTION 1 SCOPE AND GENERAL

1.1 SCOPE

This Standard specifies requirements for the design and installation of sanitary plumbing and drainage from the fixtures to a sewer, common effluent system or an on-site wastewater management system, as appropriate. It applies to new installations as well as alterations, additions or repairs to existing installations.

Illustrations used in this Standard are diagrammatic only and have been chosen without prejudice.

This Standard also specifies requirements in accordance with the requirements of AS 2870, for flexible mechanical connections to be installed in all plastics pipe drainage systems and covers flexible connections, lagging and water ingress under the slab via trenches to accommodate a total range of differential soil movement for Classes M, M-D, H1, H1-D, H2, H2-D, E and E-D. Appendix E provides further information on classification of soils.

This Standard does not provide specific designs for Class P sites. A classification of P, by itself, will not usually provide sufficient information to enable an appropriate plumbing and drainage system design to be prepared. Additional information will usually be required, according to the nature of the factors leading to the P classification.

NOTES:

1 The pre-treatment of trade wastes is not specified in this Standard.

2 All sanitary plumbing and sanitary drainage installations for relocatable dwellings on long-term sites should conform with this Standard.

1.2 APPLICATION

1.2.1 Australia

This Standard shall be read in conjunction with the Plumbing Code of Australia (PCA) in Australia.

Where alternative Australian or New Zealand standards are referenced (e.g. AS 1345) the Australian Standard shall be used for Australia only.

For Australia, this Standard does not preclude the use of any design or method of installation, provided the completed system and installation meet the performance requirements of the PCA or BCA, as appropriate.

1.2.2 New Zealand

This Standard shall be read in conjunction with the New Zealand Building Code in New Zealand. This Standard may be used for conformance with the New Zealand Building Code, Paragraph G13, Foul water.

Where alternative New Zealand standards are referenced (e.g. NZS 5807), the New Zealand Standard shall be used for New Zealand only.

1.3 NORMATIVE REFERENCES

The following are the normative documents referenced in this Standard.

AS

1074	Steel tubes and tubulars for ordinary service
1345	Identification of the contents of pipes, conduits and ducts
1379	Specification and supply of concrete
1432	Copper tubes for plumbing, gasfitting and drainage applications
1478	Chemical admixtures for concrete, mortar and grout
1478.1	Part 1: Admixtures for concrete
1566	Copper and copper alloys—Rolled flat products
1589	Copper and copper alloy waste fittings
1604	Specification for preservative treatment
1064.1	Part 1: Sawn and round timber
1631	Cast grey and ductile iron non-pressure pipes and fittings
1646	Elastomeric seals for waterworks purposes
1657	Fixed platforms, walkways, stairways and ladders—Design, construction and installation
1741	Vitrified clay pipes and fittings with flexible joints—Sewer quality
2129	Flanges for pipes, valves and fittings
3501	Parallel screw threads of Whitworth form (BSW and BSF) and associated gauges and gauging practice
3517	Capillary fittings of copper and copper alloy for non-pressure sanitary plumbing applications
3571	Plastics piping systems—Glass-reinforced thermoplastics (GRP) systems based on unsaturated polyester (UP) resin
3571.1	Part 1: Pressure and non-pressure drainage and sewerage (ISO 10467:2004, MOD)
3600	Concrete structures
3688	Water supply and gas systems—Metallic fittings and end connectors
3795	Copper alloy tubes for plumbing and drainage applications
4139	Fibre-reinforced concrete pipes and fittings
4809	Copper pipe and fittings—Installation and commissioning

AS/NZS

1167	Welding and brazing—Filler metals
1167.1	Part 1: Filler metal for brazing and braze welding
1167.2	Part 2: Filler metal for welding
1260	PVC-U pipes and fittings for drain, waste and vent applications
1546	On-site domestic wastewater treatment units
1546.1	Part 1: Septic tanks
1546.2	Part 2: Waterless composting toilets
1546.3	Part 3: Aerated wastewater treatment systems
2032	Installation of PVC pipe systems

AS/NZS	
2033	Installation of polyethylene pipe systems
2280	Ductile iron pipes and fittings
2544	Grey iron pressure fittings
2648	Underground marking tape
2648.1	Part 1: Non-detectable tape
2878	Timber—Classification into strength groups
3500	Plumbing and drainage
3500.0	Part 0: Glossary of terms
3500.1	Part 1: Water services
3879	Solvent cements and priming fluids for PVC (PVC-U and PVC-M) and ABS and ASA pipes and fittings
4087	Metallic flanges for waterworks purposes
4331	Metallic flanges (series)
4401	Plastics piping systems for soil and waste discharge (low and high temperature) inside buildings—Polyethylene (PE)
4671	Steel reinforcing materials
4680	Hot-dip galvanized (zinc) coatings on fabricated ferrous articles
4936	Air admittance valves (AAVs) for use in sanitary plumbing and drainage systems
4999	PVC-U maintenance shafts
5065	Polyethylene and polypropylene pipes and fittings for drainage and sewerage applications
7671	Plastics piping systems for soil and waste discharge (low and high temperature) inside buildings—Polypropylene (PP) (ISO 7671:2003, MOD)
NZS	
3109	Concrete construction
3113	Specification for chemical admixtures for concrete
3124	Specification for concrete construction for minor works
3640	Chemical preservation of round and sawn timber
5807	Code of practice for industrial identification by colour, wording or other coding
7643	Code of practice for the installation of unplasticized PVC pipe systems
ISO	
7685	Plastics piping systems — Glass-reinforced thermosetting plastics (GRP) pipes — Determination of initial specific ring stiffness
9969	Thermoplastics pipes — Determination of ring stiffness
BS EN	
295	Vitrified clay pipe systems for drains and sewers
295-1	Requirements for pipes, fittings and joints

EN	
10088	Stainless steels
10088-1	Part 1: List of stainless steels
NZS/BS	
1387	Specification for screwed and socketed steel tubes and tubulars and for plain end steel tubes suitable for welding or for screwing to BS 21 pipe threads
ASTM	
A240/A240M	Standard Specification for Chromium and Chromium-Nickel Stainless Steel Plate, Sheet, and Strip for Pressure Vessels and for General Applications
A270/A270M	Standard Specification for Seamless and Welded Austenitic and Ferritic/Austenitic Stainless Steel Sanitary Tubing
ABCB	
NCC	National Construction Code (series)
NZBC	Clause G13 Foul Water
WMTS	
WMTS-518	Rehabilitation of existing Non Pressure Pipelines by the use of Cured In Place Pipe (CIPP)
WSAA	
WSA 117	Industry Standard for Acrilonitrile Butadiene Styrene (ABS) Compounds, Pipes and Fittings for Drainage and Sewerage

NOTE: Documents referenced for informative purposes are listed in the Bibliography.

1.4 DEFINITIONS

For the purpose of this Standard, the definitions given in AS/NZS 3500.0, the one below and those specific to vacuum drainage in Section 16 apply:

1.4.1 Flexible mechanical joint

A joint (or joints) that permits movement, expansion and/or contraction and/or rotation (or swivel) including axial rotation of the jointed pipes or fittings with sufficient degrees of freedom to accommodate any anticipated ground movements (or movements of the supporting structure), which results in having the ability to telescope and/or articulate (or swivel) and/or axially rotate as a response to differential ground movements.

1.4.2 Pressure attenuator

A device used as an alternative to relief venting to reduce positive air pressure pulses in discharge stacks.

1.4.3 Renovation

Work incorporating all or part of the original fabric of the pipeline, by means of which its current performance is improved.

1.4.4 Structural liner

A liner that has sufficient pipe ring stiffness as to be self-supporting and able to resist buckling due to ground water or soil loads in the absence of support from the host pipe.

1.4.5 Waffle raft

A stiffened raft with closely spaced ribs constructed on the ground and with slab panels suspended between ribs.

1.5 PLASTICS ABBREVIATIONS

The following plastics abbreviations are used in this Standard.

ABS	Acrylonitrile butadiene styrene
GRP	Glass-filament-reinforced thermosetting plastic
PP	Polypropylene
PP-R	Polypropylene random copolymer
PB	Polybutylene
PE-HD	High density polyethylene
PE-X	Cross-linked polyethylene
PVC-U	Unplasticized polyvinyl chloride
PVC-M	Modified polyvinyl chloride
PVC-O	Oriented polyvinyl chloride

1.6 MEASUREMENT OF PIPE LENGTH

For the purposes of this Standard, the length of a branch drain or discharge pipe shall be measured along the centre-line from the weir of the trap to the point of connection to a stack, graded discharge pipe, drain or other drainage trap as shown in Figure 1.6.

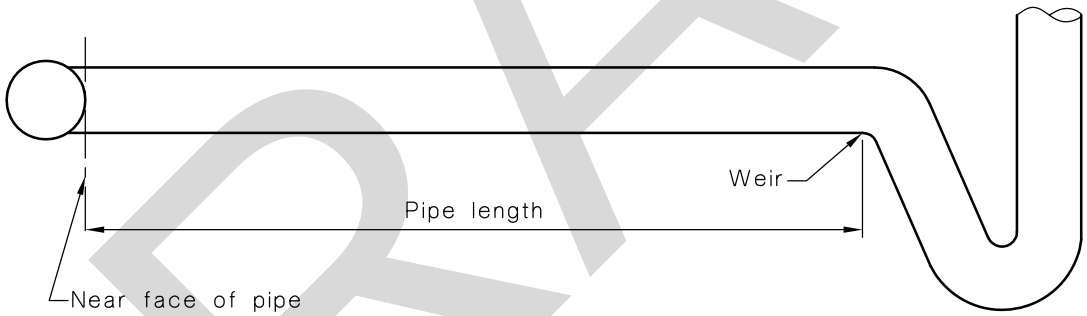

FIGURE 1.6 PIPE LENGTH—METHOD OF MEASUREMENT

1.7 PIPE GRADES

In this Standard, pipe grades are expressed as a percentage of vertical to horizontal distances.

1.8 EQUIVALENT PIPE SIZES

Nominal sizes of pipes and fittings quoted in this Standard are applicable to all materials listed in Appendix A, except for polyethylene (PE) and polypropylene (PP). Where the nominal size of a pipe or fitting is specified in this Standard, an equivalent pipe size, appropriate to polyethylene and polypropylene pipes and fittings, shall be selected from Table 1.8.

TABLE 1.8

EQUIVALENT SIZES FOR PE AND PP PIPES AND FITTINGS

Nominal size DN	Equivalent OD for PE and PP
32	32
40	40
50	50
65	63
80	90
100	110
125	125
150	160
225	250
300	315

SECTION 2 MATERIALS AND PRODUCTS

2.1 SCOPE OF SECTION

This Section specifies requirements for materials and products to be used in sanitary plumbing, vacuum drainage and drainage systems.

2.2 AUTHORIZATION

In Australia, certain materials and products require authorization for use in plumbing and drainage installations in accordance with the Plumbing Code of Australia (PCA). In New Zealand product authorization is not required.

NOTE: A database of authorized products is available from www.abcb.gov.au.

2.3 SELECTION AND USE OF MATERIALS AND PRODUCTS

Materials and products used in sanitary plumbing and drainage systems, and vacuum drainage, shall be selected to ensure they are fit for their intended purpose.

Pipes and fittings shall be selected from those listed in Appendix A.

Factors to be taken into account in the selection shall include, but are not to be limited to, the following:

(a) The type of usage likely to occur.

(b) The nature and temperature of the water to be conveyed and the risk of corrosion, degradation and leaching.

(c) The nature of the environment and the ground, and the possibility of chemical attack and permeation therefrom.

(d) The physical and chemical characteristics of the materials and products.

(e) Compatibility of materials and products.

(f) Frost protection in accordance with AS/NZS 3500.1.

(g) Accessibility, for inspection, service, repair and replacement.

NOTE: Information on some of the above items may be obtainable from the supplier or manufacturer of the material or product.

2.4 LIMITATIONS ON THE USE OF PIPES AND FITTINGS

2.4.1 General limitations

The following limitations shall apply to the use of pipes and fittings for plumbing and sanitary drainage installations:

(a) Bends in pipes shall be free from wrinkling and flattening.

(b) Pipes and fittings shall be protected from excessive ambient heat.

2.4.2 Metallic pipes and fittings

Metallic pipes and fittings shall conform with the following:

(a) Galvanized steel pipes and fittings shall not be—

(i) used for the conveyance of discharge from soil fixtures;

(ii) cement-lined;

(iii) bent; or

(iv) installed in inaccessible locations.

(b) Copper pipes and fittings shall not be used to convey—

(i) undiluted discharges from urinals, trade waste discharges that could have a deleterious effect on the copper (e.g. wastes from photographic equipment or cooling towers); or

(ii) the discharge from grease arrestors.

(c) Copper and copper alloy pipes shall not be bent on site beyond an offset angle of 10°, except that Type D copper shall not be bent.

(d) Copper alloy bends and junctions used at the base of stacks greater than 9 m in height shall be cast or hot-pressed.

(e) Austenitic stainless steel pipes and fittings shall be Types 304, 304L, 316 or 316L or EN 10088-1, Grade EN 1.4301 or Grade EN 1.4404.

(f) Stainless steel drains located below ground shall be Type 316 or EN 10088-1, Grade EN 1.4404.

2.4.3 Fabricated metallic pipes and fittings

Fabricated metallic pipes and fittings shall conform with the following:

(a) Copper alloy fittings other than junctions shall not be fabricated on site.

(b) All fabricated copper bends and junctions at the base of stacks up to 9 m in height shall be formed of Type B or heavier gauge copper.

(c) Stainless steel fittings and assemblies, including bending, shall not be fabricated on site.

2.4.4 Plastics pipes and fittings

Plastics pipes and fittings shall conform with the following:

(a) Plastics pipes and fittings of materials other than PVC shall be protected from direct sunlight.

NOTE: Examples of protection include sleeving with metal or plastics pipe or conduit, lagging or painting with UV resistant paint.

(b) Glass-filament-reinforced thermosetting plastic (GRP) pipes shall have a minimum pipe stiffness of 5000 N/m deflection per metre length when installed below ground.

2.4.5 Other materials—Pipes and fittings

Pipes and fittings other than metallic or plastics shall conform with the following:

(a) Fibre-reinforced concrete (FRC) pipes shall not be used in waste lines receiving trade waste discharges that could have a deleterious effect on the FRC (e.g. wastes from photographic equipment or cooling towers).

(b) Vitrified clay pipes and fittings shall conform with AS 1741 or BS EN 295-1.

Vitrified clay pipes and fittings shall not be used above ground except where installed as a riser connected to a fixture in accordance with Clause 3.8.3, or as a drain under buildings in accordance with Clause 4.3.2(b).

2.4.6 Pipes and fittings for pressure applications

Pipes and fittings for pressure applications shall conform with the pressure requirements of Section 2 of AS/NZS 3500.1.

2.4.7 Pipes and fittings for vacuum drainage systems

Materials and products used in vacuum drainage systems shall be in accordance with this Section and Section 16.

2.5 SHEET MATERIALS

2.5.1 Copper

Copper sheet shall be not inferior to alloy C12200 conforming with AS 1566.

2.5.2 Stainless steel

Stainless steel sheet shall not be inferior to Type 304 conforming with ASTM A240/A240M, and shall be not less than 1.2 mm thick.

2.6 JOINTS

2.6.1 Flanged joints

Flanged joints shall conform with—

(a) AS/NZS 2280 and AS/NZS 2544 for ductile iron and grey cast iron; or

(b) AS 2129, AS/NZS 4331 (series) or AS/NZS 4087 and be appropriate for the test pressure requirements of Section 15.

2.6.2 Elastomeric seals

Elastomeric seal materials shall conform with AS 1646.

Where an elastomeric seal gasket is provided in the line or in a fitting, it shall not be replaced with mastic or sealant compounds.

2.6.3 Silver brazing alloy

2.6.3.1 *Copper and copper alloys*

Silver brazing alloys for capillary jointing of copper and copper alloy pipes and fittings shall conform with the requirements for silver brazing alloys or copper phosphorus alloys of AS/NZS 1167.1 and contain a minimum of 1.8% silver and a maximum of 0.05% cadmium.

2.6.3.2 *Stainless steels*

Silver brazing alloys for capillary jointing of stainless steel pipes and fittings shall conform with AS/NZS 1167.1 and contain a minimum of 38% silver and a maximum of 0.05% cadmium.

2.6.4 Filler rods for stainless steel joints

Joints in stainless steel pipework larger than DN 25 shall be made using filler rods of low carbon stainless steel not greater than 2 mm in diameter, conforming with AS/NZS 1167.2.

2.6.5 Plastics

2.6.5.1 *Solvent cement and priming fluid*

Solvent cement and priming fluid used for jointing plastics pipes and fittings shall conform with AS/NZS 3879.

Solvent cement shall not be used without priming fluid.

NOTE: The colour of the priming fluid should be different from the colour of the solvent cement and the pipe to which it is applied. Generally, the priming fluid is pink, and the solvent cement is generally—

(a) for Type P PVC, green (Australia) or blue or gold (New Zealand);

(b) for Type N PVC, blue (Australia) or clear (New Zealand);

(c) for Type P ABS, grey; and

(d) for Type G, clear.

2.6.5.2 *High density polyethylene (PE-HD)*

Jointing of pipes and fittings shall be in accordance with AS/NZS 2033.

2.7 CONCRETE AND MORTAR

2.7.1 Concrete mix

Pre-mixed concrete shall conform with AS 1379 and shall have a minimum characteristic compressive strength of 20 MPa, as specified in AS 3600 or NZS 3109, NZS 3124.

Site-mixed concrete shall consist of cement, fine aggregate and coarse aggregate, all measured by volume, and shall have sufficient water added to make the mix workable. It shall have a minimum characteristic compressive strength of 20 MPa.

2.7.2 Cement mortar

Cement mortar shall consist of one part cement and two parts of fine aggregate measured by volume, properly mixed with the minimum amount of water necessary to render the mix workable.

Cement mortar that has been mixed and left standing for more than 1 h shall not be used.

2.7.3 Chemical admixtures

Chemical admixtures used in concrete shall conform with AS 1478.1 or NZS 3113.

2.7.4 Water for concrete and mortar

Water used for mixing concrete and cement mortar shall be free from amounts of matter that are harmful to the mixture, the reinforcement or any other items embedded within the concrete or mortar.

2.7.5 Steel reinforcement

Steel reinforcing materials used in concrete structures shall conform with AS/NZS 4671.

2.8 MISCELLANEOUS

2.8.1 Timber

Timber exposed to the weather shall be of durability Class 2 conforming with AS/NZS 2878 or shall be treated in accordance with AS 1604.1. In New Zealand, exposed timber shall be treated to H3 (CCA) in accordance with NZS 3640.

Timber in contact with the ground shall be durability Class 1 for Australia and H4 (CCA) for New Zealand.

2.8.2 Epoxy resins

Epoxy resins shall be compatible with the materials being joined.

2.8.3 Pipe bedding

Pipe bedding materials shall conform with Clause 5.4.

2.8.4 Backfill

Backfill material shall conform with Clause 5.5.

2.8.5 External protective coatings

External coatings used for the protection of drains installed in corrosive areas shall—

(a) be impervious to the passage of moisture;

(b) be resistant to the external corrosive environment;

(c) be resistant to abrasion by the surrounding fill; and

(d) not contain any material that could cause corrosion to the underlying pipes or fittings.

NOTE: Polyethylene sleeving used to protect underground drains may require additional protection if installed in rock or in stony ground.

2.8.6 Fibreglass reinforced plastics tanks

Fibreglass-reinforced plastics tanks shall be manufactured in accordance with AS/NZS 1546.1.

SECTION 3 DRAINAGE DESIGN

3.1 SCOPE OF SECTION

This Section specifies requirements for the design of sanitary drainage systems.

NOTE: Vacuum drainage is covered in Section 16.

3.2 LOCATION OF DRAINS

3.2.1 General

Any drain located under or inside a building shall only serve fixtures within that building.

The plumbing and drainage system shall accommodate the range of differential soil movement in accordance with the soil movement classified on each individual site. Prior to the commencement of work, the site classification in accordance with AS 2870 shall be obtained.

These provisions are required for all Class M, M-D, H1, H1-D, H2, H2-D, E and E-D sites with nominal pipe sizes, up to 315 mm diameter in accordance with this Standard.

NOTES:

1 Drains should be located external to the building wherever practicable.

2 Pipes may be encased in concrete or in recesses in the slab when provided with flexible joints at the exterior of the edge beam/slab.

3.2.2 Site classification based on soil reactivity

Classification of sites where ground movement is predominantly due to soil reactivity under normal moisture conditions shall be classified based on the expected level of ground movement as nominated in AS 2870.

For classed M, H1, H2 and E further classification may be required, based on the depth of the expected moisture change. For sites with deep-seated moisture changes characteristics of dry climates and corresponding to a design depth of suction equal to or greater than 3 m, the classification shall be M-D, H1-D, H2-D or E-D as appropriate.

NOTES:

1 For example, M represents a moderately reactive site with shallow moisture changes and M-D represents a moderately reactive site with deep moisture changes.

2 Clauses which relate to a site classification apply to both shallow and deep moisture changes.

3.2.3 Plumbing and drainage requirements for buildings on sites with predicted differential ground

Plumbing and drainage for buildings on sites classified M, H1, H2, and E (for sites with predicted differential ground movements in the range of 21 mm to 200 mm) shall be in accordance with Table 3.2.2.

TABLE 3.2.2

TYPICAL SOIL CLASSIFICATION BY CHARACTERISTIC SURFACE MOVEMENT

Soil classification	Soil foundation	Characteristic surface movement (*ys*) mm
A	Most sand and rock sites with little or no ground movement from moisture changes	0
S	Slightly reactive clay sites, which may experience only slight ground movement from moisture changes	0–20
M	Moderately reactive clay sites, which may experience moderate ground movement from moisture changes	21–40
H1	Highly reactive clay sites, which may experience high ground movement from moisture changes	41–60
H2	Highly reactive clay sites, which may experience very high ground movement from moisture changes	61–75
E	Extremely reactive sites, which may experience extreme ground movement from moisture changes	76+
P	Applies to 'problem' sites (e.g. filled soil or potential to collapse). Special provisions apply.	As specified

Buildings on sites classified M, H1, H2, and E shall be provided with plumbing and drainage systems designed in accordance with the following:

(a) The base of trenches shall be sloped away from the building. Trenches shall be backfilled with clay in the top 300 mm within 1.5 m of the building. The clay used for backfilling shall be compacted.

NOTE: See Figure 3.2.2(A).

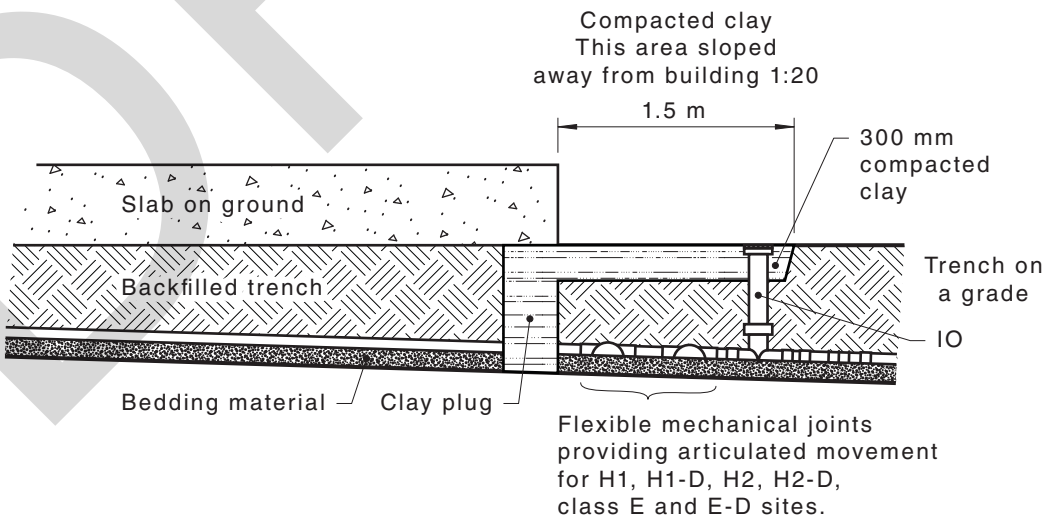

FIGURE 3.2.2(A) TYPICAL INSTALLATION OF CLAY PLUG

(b) Where plumbing and drainage pass under footing systems, there shall be a barrier to prevent the ingress of water. This shall be achieved by—

(i) backfilling the width of the trench to full depth with clay of thickness not less than 300 mm; or

(ii) installing a damp-proofing membrane conforming with AS 2870 across the cross-section of the trench, taped to the pipe with an inert waterproof tape and keyed into the sides and base of the trench.

NOTE: See Figure 3.2.2.(B).

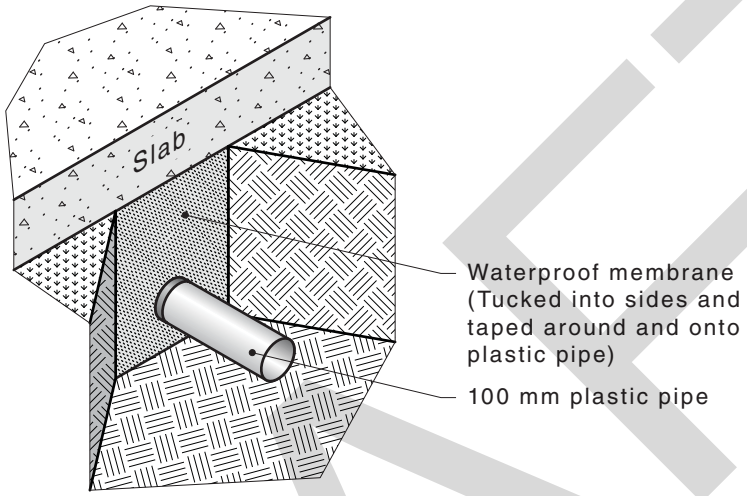

FIGURE 3.2.2.(B) TYPICAL INSTALLATION OF DAMP-PROOFING MEMBRANE

(c) Penetrations for plumbing and drainage pipework through beams of a raft and perimeter strip footings shall be avoided where practicable, but where necessary, shall be detailed to allow for movement as follows:

(i) Closed-cell polyethylene lagging shall be wrapped around all sanitary plumbing and drainage pipework at penetrations (excluding vertical).

(ii) Sanitary plumbing and drainage pipework shall be a minimum of 20 mm thick on Class M , Class H1 sites and 40 mm thick on Class H2 and Class E sites.

(d) Except for Class M sites, sanitary plumbing and drainage pipework attached to or emerging from underneath the building shall incorporate two flexible joints with a spacing between the joints not exceeding 2.5 times the pipe diameter, installed externally and commencing 1 m outside the footing. Such joints shall accommodate a total range of differential movement in any direction not less than the estimated characteristic surface movement of the site (*y*s).

The fittings or other devices that are provided to allow for the movement shall be set at the mid-position of their range of possible movement at the time of installation, to allow for movement equal to 0.5 of the maximum *y*s value specified as applicable to the site classification.

3.3 SIZE AND LENGTH OF DRAINS

3.3.1 Fixture unit loading

The size of a drain shall be determined by the number of fixture units and type of fixtures discharging into it. The fixture unit loading for each pipe size and grade shall not exceed the maximum specified in Table 3.3.1.

NOTE: Fixture unit ratings are given in Tables 6.2(A) and 6.2(B).

TABLE 3.3.1

MAXIMUM FIXTURE UNIT LOADING FOR VENTED DRAINS

Grade %	Nominal size of drain DN						
	65 (see Note 1)	80	100	125	150	225	300
5.00	60	215	515	1450	2920	11 900	26 900
3.35	36	140	345	1040	2200	9490	21 800
2.50	25	100	255	815	1790	8060	18 700
2.00	×	76	205	665	1510	7090	16 600
1.65	×	61	165	560	1310	6370	15 000
1.45	×	(50)	(140)	485	1160	5810	13 900
1.25	×	(42)	(120)	425	1040	5360	12 900
1.10	×	×	×	(380)	935	4970	12 100
1.00	×	×	×	(340)	855	4500	11 400
0.85	×	×	×	×	(725)	3850	10 300
0.65	×	×	×	×	(595)	3250	9090
0.50	×	×	×	×	×	×	7720
0.40	×	×	×	×	×	×	6780

NOTES:

1 DN 65 drains may be used as branch drains only, provided no soil fixtures (except urinals) are connected thereto.

2 '×' indicates that the combination of nominal size and grade is not acceptable.

3 Figures in brackets are the maximum fixture unit loadings for drains laid at reduced grades in accordance with Clause 3.4.2.

4 The regulatory authority may prescribe or approve the sizing and grading of any drain on the basis of observed peak flows for buildings of similar occupancy in lieu of the size determined as prescribed in this Standard.

3.3.2 Main drain

The minimum size of a main drain shall be DN 100.

3.3.3 Branch drains

The minimum size of a branch drain shall be DN 65.

3.3.4 Limitations on vented DN 80 branch drains

Not more than two water closet pans shall be connected to a vented DN 80 branch drain. Any discharge pipe from a bath or laundry trough connected to a DN 80 vented branch drain shall be DN 40.

3.3.5 Use of eccentric taper fitting

Where any fixture with a P-trap of DN 40 or DN 50 is connected to a DN 65 branch drain, the eccentric taper fitting used to make the connection shall be fitted immediately downstream of the fixture trap, as shown in Figure 3.3.5. The soffit of the fitting shall be in common alignment with the soffit of the pipe to which it is connected.

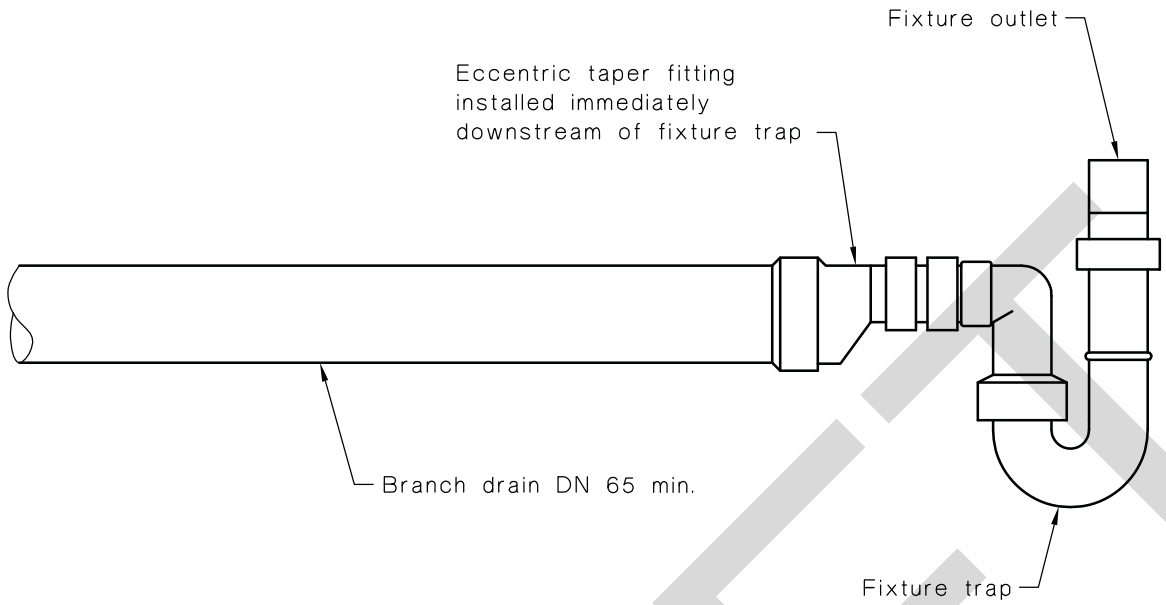

FIGURE 3.3.5 CONNECTION OF FIXTURE TRAPS (DN 40 OR DN 50) ON GRADE TO BRANCH DRAINS

3.3.6 Size change

A drain shall not diminish in size in the direction of flow.

3.3.7 Downstream of boundary trap

Drains downstream of a boundary trap shall be not smaller than DN 100.

3.3.8 Oversizing of drains

A drain shall not be increased in size unless the fixture unit loading is in excess of the maximum allowable for that size drain at a particular grade, as specified in Table 3.3.1.

3.3.9 Maximum length of fixture discharge pipes

The maximum length of fixture discharge pipe without venting shall be in accordance with Appendix C.

3.4 GRADES OF DRAINS

3.4.1 Minimum grade

The nominal minimum grade of vented and unvented drains shall be as given in Table 3.4.1.

TABLE 3.4.1

MINIMUM GRADE OF DRAINS

Nominal size DN	Minimum grade %
65	2.50
80	1.65
100	1.65*
125	1.25
150	1.00
225	0.65
300	0.40

* Except for drains from septic tanks, sewage treatment plants and unvented discharge pipes from tundishes, which may have a minimum grade of 1.00%.

NOTE: Appendix C provides a table for conversion of grades as a percentage to grades as a ratio.

3.4.2 Reduced grades

Where the minimum gradient, as specified in Table 3.4.1, cannot be obtained, drains may be laid at the reduced grades given in Table 3.4.2.

Where soil fixtures are connected, the fixture unit loading on the drain shall be not less than the appropriate value given in Table 3.4.2. If this loading cannot be achieved, provision shall be made for flushing the drain.

TABLE 3.4.2

MINIMUM FIXTURE UNIT LOADINGS FOR REDUCED GRADE DRAINS

Reduced grade %	Nominal size of drain, DN			
	80	100	125	150
1.45	9	10	—	—
1.25	10	18	—	—
1.10	×	×	27	—
1.00	×	×	38	—
0.85	×	×	×	75
0.65	×	×	×	160

NOTES:

1 '×' indicates that the combination of nominal size and grade is not acceptable.

2 '—' indicates that the grade is acceptable by Table 3.4.1 for this size (i.e. not reduced grade).

3 Appendix C provides a table for conversion of grades as a percentage to grades as a ratio.

3.4.3 Steep grades

Where it is necessary to install a drain on a grade between 20% and vertical, anchor blocks shall be installed—

(a) at the bend or junction at the top and bottom of the inclined drain; and

(b) at intervals not exceeding 3 m.

3.4.4 Anchor blocks

Anchor blocks for drains up to DN 150 shall be of reinforced concrete having two reinforcing rods of not less than 9 mm diameter. The reinforcing rods shall be bent to a radius that is 100 mm greater than the outside diameter of the pipe, as shown in Figure 3.4.4. Anchor blocks shall—

(a) be not less than 150 mm in thickness;

(b) extend across the full width and be firmly keyed into the sides of the trench;

(c) extend above the top of the pipe to a minimum height of 150 mm;

(d) extend below the base of the trench for a minimum depth of 150 mm; and

(e) not cover any flexible joint.

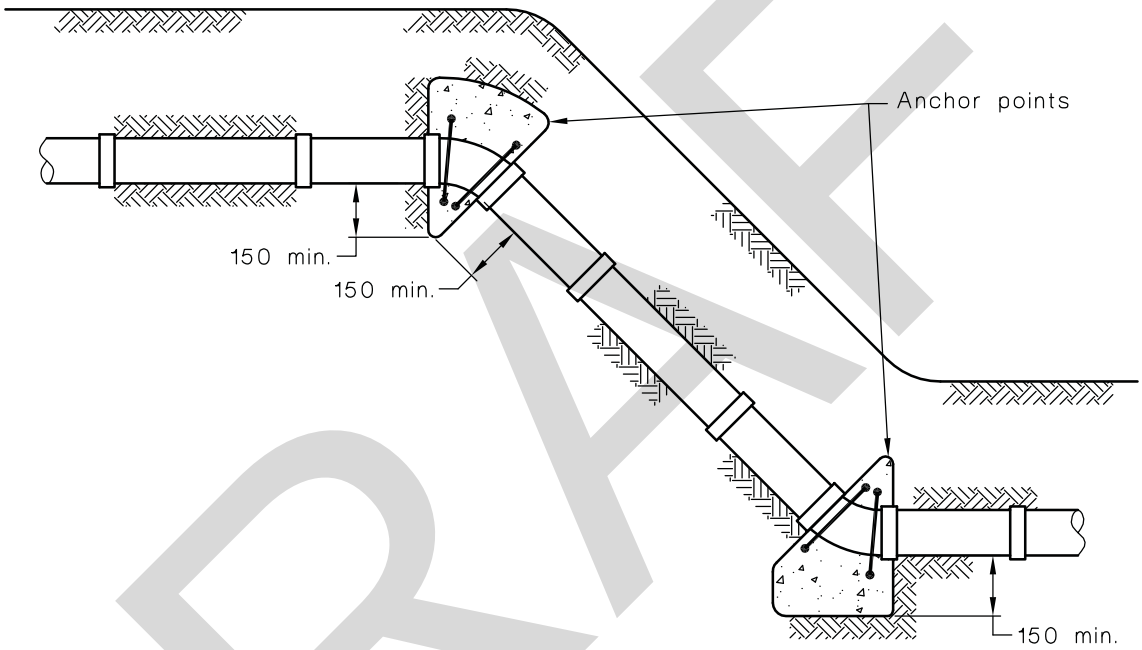

DIMENSIONS IN MILLIMETRES

FIGURE 3.4.4 ANCHORING OF DRAINS

3.5 LAYING OF DRAINS

3.5.1 General

Where a drain is to be located in an open cut trench that is in a road, easement, public place or the like, it shall be installed in accordance with the following:

(a) Where the full depth at the point of connection is not required to drain the property, a jump-up shall be installed either at the point of connection or within the property boundary.

(b) Where the presence of any obstacle prevents the drain from being laid at an even grade and with the required cover, the drain shall pass beneath the obstacle at an even grade with a jump-up only at the point of connection. Alternatively, a minimum clearance of 25 mm shall be provided between the obstacle and the drain, or an inclined section may be installed adjacent to the obstacle in the form of a graded jump-up with changes of direction not greater than 60°.

(c) The minimum cover of the drain shall be as specified in Table 3.7.2.

3.5.2 Easements and watercourses

Drains crossing an easement or a watercourse shall be installed in accordance with the following:

(a) The drain shall pass under or over any pipeline or closed conduit in the easement or under any open channel or watercourse.

(b) In an easement, a minimum clearance of 100 mm shall be maintained between an open channel, pipeline or conduit and the drain.

(c) No drain shall be laid through any such obstacle as outlined in Item (a).

(d) Where the drain is to pass over any obstacle as set out in Item (a), the drain shall have the minimum depth of cover specified in Clause 3.7.2.

3.6 PROXIMITY TO OTHER SERVICES

3.6.1 General

Where electrical conduit, wire, cable or consumer gas pipes, drains and other services are in existence, pipes shall be installed in accordance with the requirements of Clauses 3.6.2 to 3.6.8.

3.6.2 Separation from above-ground electrical conduit, wire, cable, consumer gas or water pipes

The separation shall be at least 100 mm between any discharge pipes and any above-ground—

(a) electrical conduit;

(b) electrical wire or cable;

(c) consumer gas pipes; or

(d) water services.

3.6.3 Separation from underground electrical supply cables or consumer gas pipes

The separation between any underground drain and an electrical supply cable shall be at least—

(a) 100 mm, provided the electrical supply cable is indicated along its length with orange marker tape conforming with AS/NZS 2648.1 and is mechanically protected; or

(b) 600 mm, where the electrical supply cable is neither indicated nor protected.

The separation between any underground drain and consumer gas pipes shall be at least—

(i) 100 mm provided the consumer gas pipe is indicated along its length with marker tape conforming with the requirements of AS/NZS 2648.1, laid 150 mm above the installed pipe and is mechanically protected; or

(ii) 600 mm, where the consumer gas pipe is neither indicated nor mechanically protected.

NOTES:

1 Mechanical protection is provided by any of the following:

(a) Concrete slabs.

(b) Continuous concrete pour.

(c) Bricks designed for protecting electrical supply cables.

2 For separation from a communication cable, see Clause 3.6.5.

3.6.4 Separation from underground electrical earthing electrode

For an electrical supply not exceeding 1000 V, the separation between any underground drain pipe and an electrical earthing electrode shall be at least 500 mm.

NOTE: For an electrical supply exceeding 1000 V, the relevant regulatory authorities should be contacted for a ruling.

3.6.5 Separation from underground communication cable

The separation between any underground drain and a communication cable shall be at least 100 mm.

3.6.6 Separation from other underground services

The separation between any underground drain and any other service other than electrical supply cables, consumer gas piping, communication service or water service shall be at least 100 mm or 300 mm from a stormwater drain exceeding DN 100.

NOTE: A typical shared trench is depicted in Figure 3.6.6.

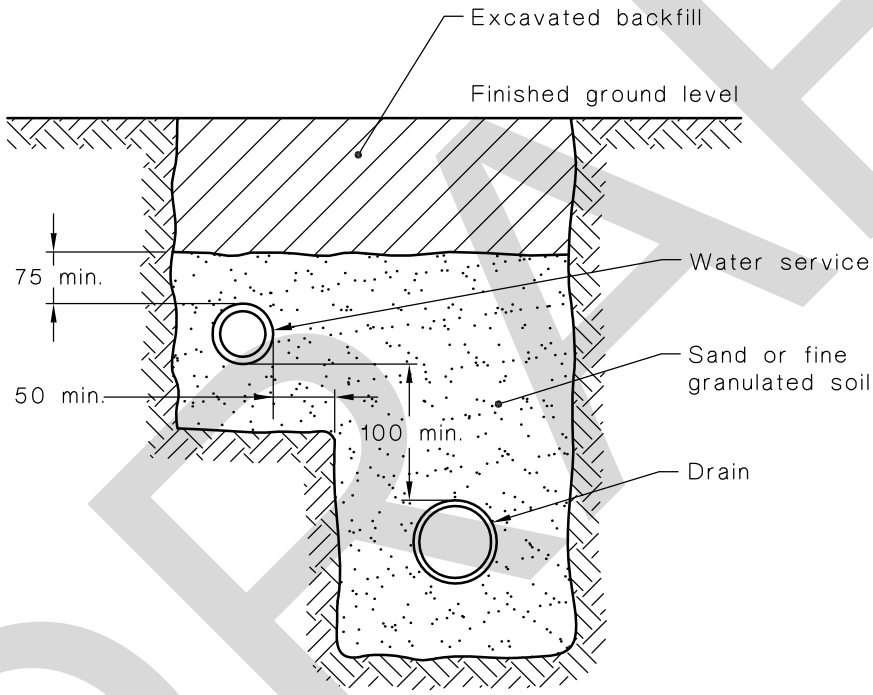

DIMENSIONS IN MILLIMETRES

FIGURE 3.6.6 TYPICAL SHARED TRENCH

3.6.7 Crossover of underground services

Any underground drain crossing a service or any underground service crossing a drain shall—

(a) cross at an angle of not less than 45°;

(b) have a vertical separation of not less than 100 mm; and

(c) be marked along its length for 1 m either side of the centre-line of the service with marker tape conforming with AS/NZS 2648.1, laid 150 mm above the installed service.

3.6.8 Clearance from underground obstructions

Drains shall be installed with sufficient clearance to any underground obstruction to protect the drain from physical damage and to permit repairs. The clearance shall be at least 100 mm.

NOTE: For drains in proximity to footings and foundations, see Clause 3.8.

3.7 DEPTH OF COVER FOR BURIED PIPES

3.7.1 General

Drains shall be laid in a manner that provides protection against mechanical damage and deformation due to vehicular loadings.

3.7.2 Depth of cover

Drains shall be installed with a minimum depth of cover, measured from the top of the pipe socket or inspection opening to the finished surface level, as specified in Table 3.7.2.

TABLE 3.7.2

MINIMUM COVER FOR BURIED PIPES

Location	Minimum depth of cover mm	
	Cast iron and ductile iron	Other materials
Subject to vehicular traffic	300	500
All other locations	Nil	300*

* Except as provided in Clauses 3.7.3 and 3.7.4.

3.7.3 Drains installed with less than minimum cover

Drains constructed of materials having less than the minimum cover specified in Table 3.7.2 shall be covered by at least 50 mm of overlay and then shall be paved with—

(a) 100 mm minimum thickness of reinforced concrete, where subject to heavy vehicular loading;

(b) 75 mm minimum thickness of brick or concrete paving, where subject to light vehicular traffic; or

(c) 50 mm minimum thickness of brick or concrete paving, where not subject to vehicular traffic.

The paving shall extend the full width of the trench, or the drain shall be protected from mechanical damage.

3.7.4 Drains under buildings

Drains below ground and under buildings may be laid with less than the minimum cover specified in Table 3.7.2, provided—

(a) 25 mm of overlay separates the drain from a reinforced concrete slab; or

(b) the drain is adequately protected from mechanical damage and superimposed loads.

3.8 BUILDING OVER DRAINS

3.8.1 Alterations and additions to buildings

The footings for alterations or additions to buildings shall not be placed over or adjacent to existing drains until the clearances specified in Clause 3.8.2 have been provided. Alternatively, such drains shall be relocated.

Any existing gully, inspection shaft, or boundary trap riser shall not remain under any such alterations or additions other than where specified in accordance with Clauses 4.4.2.3, 4.6.5 or Clause 4.6.6.5.

3.8.2 Installation near and under buildings

The following applies to drains in close proximity to footings or foundations:

(a) Where a drain passes under a strip footing, its angle of intersection with the footing in the horizontal plane shall be not less than 45°, and the minimum clearance between the top of the drain to the underside of the footing shall be 25 mm.

(b) Drains laid through footings or walls, other than below-ground external walls, shall be installed with an annular space of not less than 25 mm filled with a liner of flexible material.

(c) Pipes may be laid through below-ground external walls, provided—

  (i) two flexible joints are provided externally within 800 mm of the external face of the wall, and such joints are not less than 600 mm apart; and

  (ii) the penetration of the wall is made watertight.

(d) Where a drain is installed parallel to a footing, the trench shall be located as follows:

  (i) In Australia (for single dwellings), as shown in Figure 3.8.3.

  (ii) In New Zealand, as specified in NZBC Clause G13/AS2.

NOTE: For all other buildings or where the requirements of Item (d)(i) cannot be achieved, an engineered design should be used.

3.8.3 Fixture connections to vitrified clay drains under buildings

Where a riser of vitrified clay material is installed for the purpose of connecting a fixture, it may be extended up to 1 m above ground surface, provided—

(a) the spigot end of the riser is below ground;

(b) only the socket of the exposed pipe extends above floor level; and

(c) the exposed pipe is protected from damage.

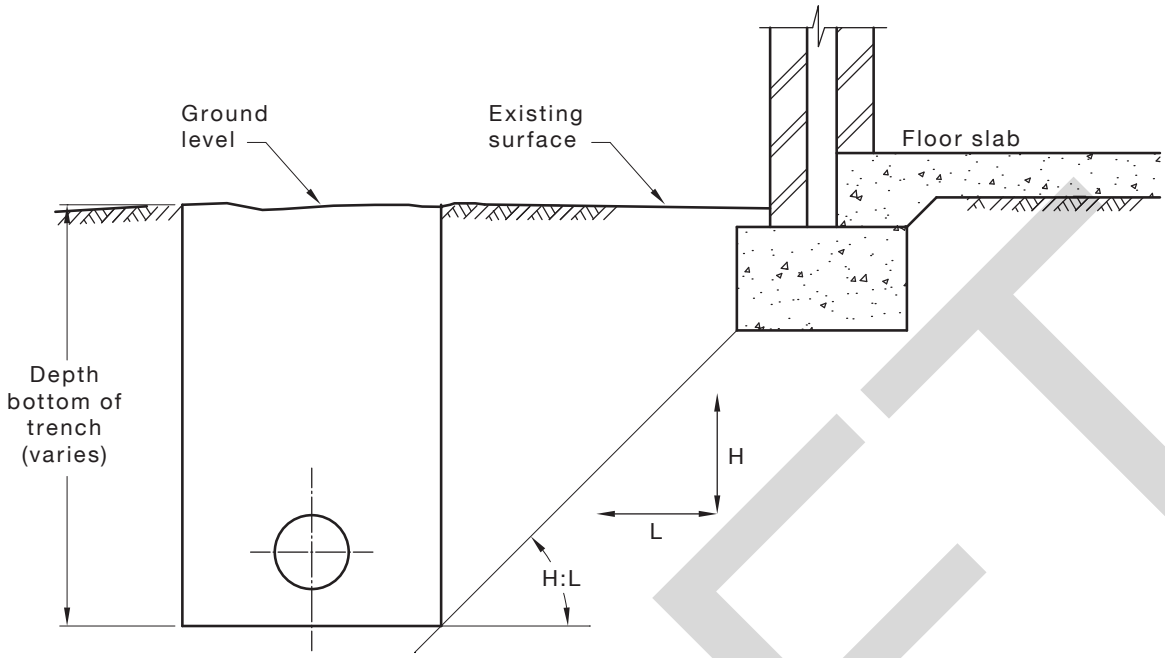

Soil type	Slope H:L	
	Compacted fill	Undisturbed ground
Stable rock (*)	2:3	8:1
Sand (*)	1:2	1:2
Silt (†)	1:4	1:4
Firm clay	1:2	1:1
Soft clay	Not suitable	2:3
Soft soils(†)	Not suitable	Not suitable

* Most sand and rock sites with little or no ground movement from moisture changes.

† Sites include soft soils, such as soft clay or silt or loose sands, landslip, mine subsidence, collapsing soils, soils subject to erosion, reactive sites subject to abnormal moisture conditions or sites that cannot be classified otherwise.

FIGURE 3.8.3 EXCAVATION NEAR FOOTINGS

3.9 VENTING OF DRAINS

3.9.1 General

Vents in drains shall be provided—

(a) at both ends of any drain that incorporates a boundary trap;

(b) at the upstream end on any drain not incorporating a boundary trap;

(c) at the upstream end of any branch drain to which a fixture trap or floor waste gully is connected, if the distance from the weir of the trap to the vented drain exceeds 10 m;

(d) at the upstream end of a branch drain to which a gully is connected, or a sullage dump point located in a caravan park is connected, if the distance from the weir of the trap to the vented drain exceeds 10 m;

(e) at the upstream end of any DN 100 branch drain to which three or more water closet pans are connected;

(f) along the line of a DN 100 vented drain where 10 or more water closet pans are installed in a toilet block and are each individually connected in accordance with Clause 3.9.3.4; and

(g) in accordance with Clause 3.9.3.1 for drains connected to vacuum sewerage systems.

NOTE: Where air admittance valves are used, see Clause 6.9.

3.9.2 Location

3.9.2.1 *Upstream vent*

The upstream vent on any drain shall be connected—

(a) to the drain downstream of any fixture or drainage trap connection, provided any unvented section of drain upstream of the vent branch connection conforms with Clause 3.10.3; or

(b) at the vent extension of a stack located at or near the upstream end of the drain, provided any unvented section of drain upstream of the stack branch connection conforms with Clause 3.10.

3.9.2.2 *Downstream vent*

Where required by Clause 3.9.1(a), the downstream vent on any drain shall be connected within 10 m of the boundary trap riser, provided no other fixture is connected between the boundary trap riser and the vent connection.

3.9.2.3 *Low level vent (ground vent)*

Where a low level vent is provided in accordance with Clause 3.9.2.2, it shall be located so that—

(a) the inlet of the vent is not less than 150 mm above ground level;

(b) it terminates not less than 3 m from any opening into a building or 5 m from any air duct intake; and

(c) it is not liable to be damaged or cause injury or obstruction.

3.9.3 Size of drainage vents

3.9.3.1 *Minimum size*

Drainage vents shall be sized in accordance with Table 3.9.3.1 and—

(a) the upstream vent on any main drain shall be not less than DN 50;

(b) the upstream vent on any branch drain shall be not less than DN 40;

(c) the section of drain acting as a vent shall be not less than DN 65, as shown in Figure 3.9.3.1;

(d) notwithstanding the number of fixture units discharging to the drain, the minimum size of any ground vent pipe shall be DN 50; and

(e) if an air admittance valve is used to terminate an upstream vent, Table 6.9.2(A) shall apply.

NOTE: Branches connected into a positive pressure area, such as near boundary traps in multistorey buildings, may need additional venting.

TABLE 3.9.3.1

SIZE AND RATING OF VENTS

Size of vent pipe DN	Fixture units discharging to drain	Vent rating
40	>1 ≤10	0.5
50	>10 ≤30	1
65	>30 ≤175	2
80	>175 ≤400	3
100	>400 ≤600	6

NOTE: See Clause 6.9 for the use of air admittance valves (AAV).

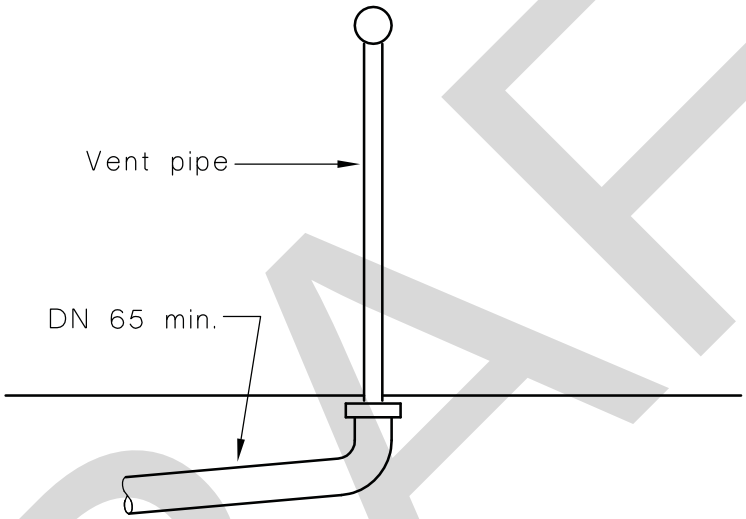

FIGURE 3.9.3.1 CONNECTION OF VENT TO DRAIN

3.9.3.2 *Rating of vents*

Where two or more vents are directly connected to a drain, these vents may take the place of the single vent required by Table 3.9.3.1, provided the sum of the ratings is equal or greater than the vent rating for the single vent as shown in Figure 3.9.3.2.

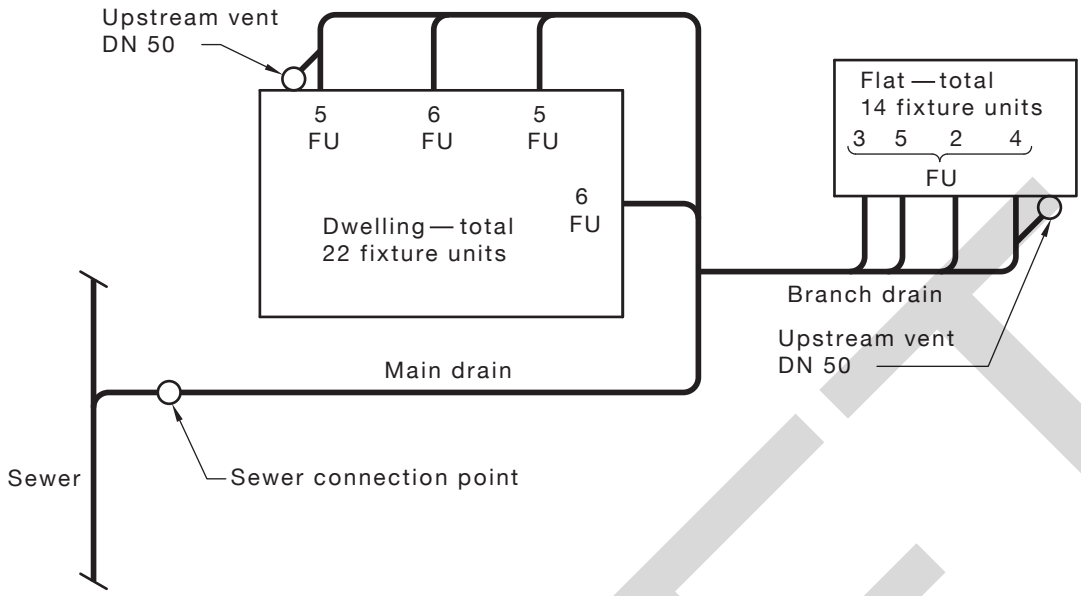

Example:

Total loading units discharging to drain = 36 FU.

Required size of drainage vent = DN 65—(Rating of 2) see Table 3.9.3.1.

The two other stack or drainage vents (assuming the branch drain is over 10 m) in combination may take the place of a single DN 65 or DN 50 vent.

NOTE: The section of drains to be vented shall not be reduced below the rating of venting required.

FIGURE 3.9.3.2 VENT SIZING

3.9.3.3 *Connection of vent to drain*

Where the minimum size of DN 65 for a drain line exists, a minimum DN 50 vent pipe may be connected as shown in Figure 3.9.3.1.

3.9.3.4 *Water closet pans in toilet blocks*

Water closet pans connected to a DN 100 drain in toilet blocks shall be vented in accordance with the following:

(a) The vents shall be positioned to divide the water closet pans into approximately equal groups.

(b) Where 10 or more water closet pans, in any ground-floor toilet block, are each separately connected to a vented drain, and the spacing of respective branch drain connections to the vented drain are such that they are 2 m apart or less, one DN 50 vent, located between the last and second last pan, shall be provided for the first 10 pans and an additional DN 50 vent shall be provided for each additional 10 pans or part thereof.

(c) Each vent shall branch from the vented drain, or from a water closet pan branch.

3.10 UNVENTED BRANCH DRAINS

3.10.1 General

The requirements of this Clause (3.10) shall apply to—

(a) ground-floor connections to a vented drain installed on grade, located below or above the ground (see Clause 10.11); or

(b) connections to a disconnector or overflow relief gully.

3.10.2 Sizing

The size of an unvented branch drain shall be such that the sum of the fixture unit ratings, as given in Table 6.2(A), shall not exceed the maximum loading specified in Table 3.10.2.

TABLE 3.10.2

SIZE OF UNVENTED BRANCH DRAINS

Size of pipe DN	Maximum fixture unit loading
65	5 fixture units (excluding a water closet pan or slop hopper); or 10 fixture units from one floor waste gully
80	12 fixture units (including not more than one water closet pan or slop hopper)
100	30 fixture units (including not more than two water closet pans or 2 slop hoppers)

3.10.3 Maximum length

The total length of an unvented branch drain, including the length of the fixture discharge pipe, shall be not greater than the following:

(a) 10 m from the vented drain to the weir of the trap, provided the length of the discharge pipe does not include a vertical drop, between the crown of the trap and the invert of the branch drain exceeds—

(i) 2 m for water closet pans with DN 80 discharge pipes;

(ii) 1.5 m, for basins and bidets fitted with 'S' traps; and

(iii) 2.5 m for all other fixtures.

(b) 10 m from the weir of a disconnector gully.

(c) 10 m from a sullage dump point.

NOTE: For typical example of the above, see Figure 3.10.3.

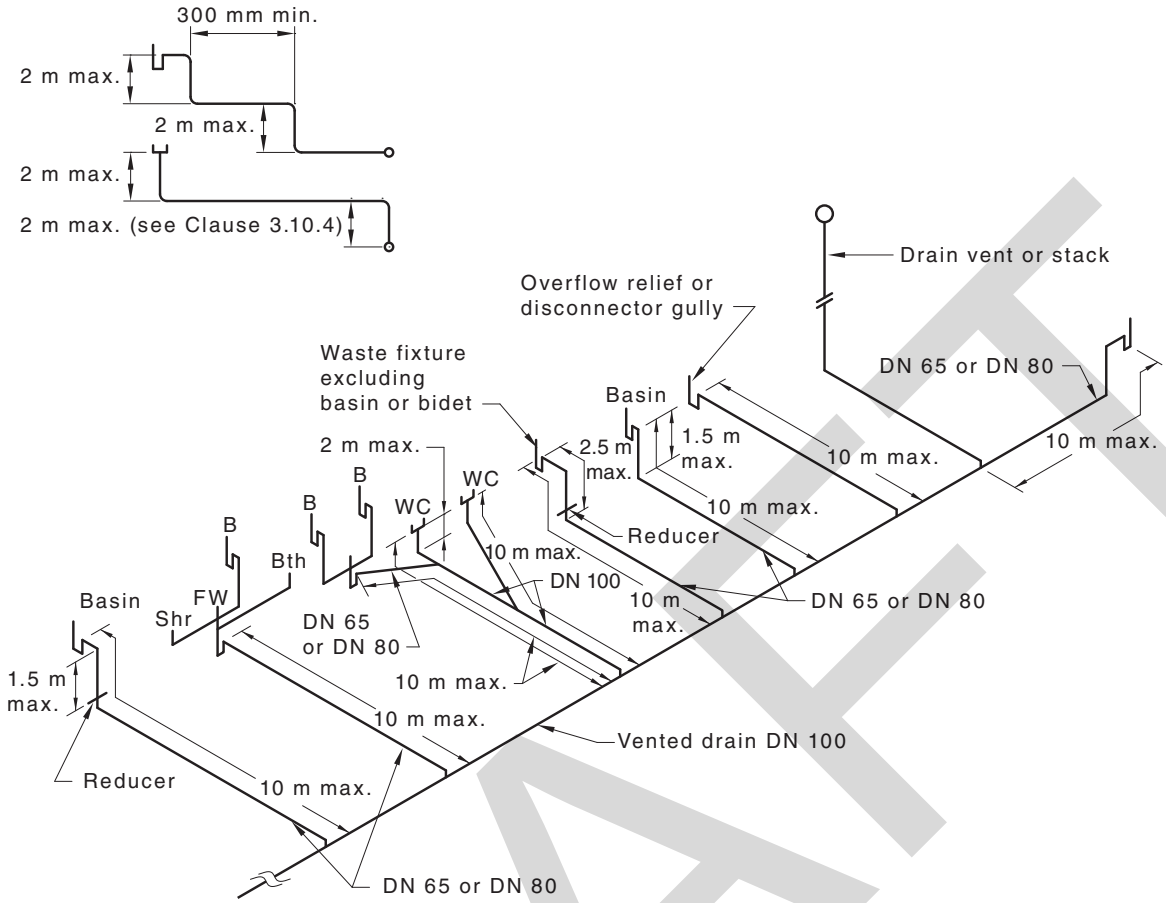

LEGEND:
B = basin
Bth = bath
FW = floor waste
SHR = shower
WC = water closet

NOTE: Total length of branch connections to fixtures to not exceed 10 m.

FIGURE 3.10.3 TYPICAL CONNECTIONS OF GROUND-FLOOR FIXTURES TO UNVENTED BRANCH DRAINS

3.10.4 Vertical sections

Where the fixture discharge pipe is the same size as the unvented branch drain to which it connects, the drain to the trap shall have a maximum of two vertical jump-ups, each not exceeding 2 m in height, and separated by not less than 300 mm of graded pipe.

3.10.5 Connection of fixture discharge pipes

Where fixtures are connected to unvented branch drains, the requirements for the fixture discharge pipes shall be the same configuration as for the connection of fixtures to group vented branches and shall conform with Clause 8.5.7.5.4 Connections of basins and bidets and Clause 8.5.7.5.5 Connection of all other fixtures and Clause 3.10.3 for maximum length of unvented drains.

3.11 UNVENTED DRAINS DISCHARGING TO GULLIES

3.11.1 General

A drain that receives the discharge from waste fixtures only may be connected to a gully.

The maximum fixture unit loading and size of unvented branch drain shall conform with Table 3.10.2.

3.11.2 Length of unvented section

The combined length of an unvented drain and fixture discharge pipe shall not exceed 10 m. The fixture discharge pipe shall conform with Clauses 3.10.3 and 3.10.5. If the combined length of the unvented drain and fixture discharge pipe exceeds 10 m, the branch line shall be vented in accordance with Clause 3.9.2 or Clause 6.9.

3.12 INLET PIPE TO DISCONNECTOR GULLY

Where the inlet pipe to a disconnector gully is DN 65 or larger, multiple branches may be connected to such inlet pipe, provided all fixture traps are within 10 m of the disconnector gully and within the fixture unit loading for pipe size and the disconnector gully.

3.13 RESTRICTION ON CONNECTIONS IN PROXIMITY TO A STACK

Discharge pipes from fixtures shall only connect to a drain in proximity to a stack in accordance with Clause 6.7 and Figure 6.7.1.

3.14 CONNECTION OF BASEMENT FIXTURES

Fixtures installed in basements or other locations, where surcharge could occur, shall be connected to the sewerage system by means of a pumping installation conforming with Section 12.

3.15 CONNECTIONS IN FLOOD-PRONE AREAS

3.15.1 Inlet above flood level

In areas subject to known flooding, the inlet to a sanitary plumbing and drainage system shall be positioned at least 150 mm above the declared flood level.

3.15.2 Inlet below flood level

Where inlets to fixtures, fittings or appliances cannot be installed at a height of 150 mm above the declared flood level, they shall be connected as follows:

(a) The discharge of the fittings, fixtures and appliances shall be raised by ejector or pump conforming with Section 12 to a height required by the regulatory authority and discharged into the sewer as and where directed.

(b) An automatic, float-controlled device or similar device shall be installed to ensure that the ejector or pump ceases to operate during periods of flooding.

3.16 RE-USE OF EXISTING SANITARY DRAINS

3.16.1 Re-use where buildings are demolished or removed

When a building containing sanitary plumbing and drainage is demolished or removed from site and a new building constructed, the following requirements shall apply to the use of existing sanitary drains up to the point of connection:

(a) Mortar-jointed vitrified clay, mortar-jointed concrete, asbestos cement and fibre-reinforced cement pipes shall not be re-used unless they have been renovated using a structural plastics liner in accordance with Clause 3.16.3.

(b) Drains constructed of other materials shall not be re-used unless they have been verified for conformance in accordance with the relevant clauses of this Standard and tested in accordance with Section 15 and found to be satisfactory.

Drains that do not conform with requirements listed above shall be replaced or repaired and retested.

3.16.2 Re-use in existing buildings

For an existing building, including alterations or additions that will involve additional fixtures being connected to the existing drain, if any section of an existing drain is found to be defective it shall be renovated in accordance with Clause 3.16.3 or a new section of drain installed.

3.16.3 Renovation techniques

3.16.3.1 *Cured in place pipe (CIPP)*

The renovation of a drain by the CIPP technique shall be in accordance with Appendix G with the exception of Clause G3(g) which does not apply.

NOTE: CIPP renovation is the lining of a drain with a flexible tube impregnated with a thermosetting resin. This produces a rigid pipe after the resin has cured.

3.16.3.2 *Other renovation techniques*

Other renovation techniques that can be utilized in the renovation of existing sanitary drains shall be as follows:

(a) *Lining with discrete pipes* Lining with short lengths of pipe which are jointed to form a continuous pipe one by one during insertion, the cross-section of the lining pipe remaining unchanged.

(b) *Lining with continuous pipes* Lining with a pipe made continuous prior to insertion, where the diameter of the lining pipe remains unchanged.

(c) *Lining with close-fit pipes* Lining with a continuous pipe for which the cross-section is reduced to facilitate installation and expanded after installation to provide a close fit to the existing pipe.

(d) *Lining with spirally-wound pipes* Lining with a profile strip, spirally wound to form a continuous pipe after installation.

Appendix G is applicable to the above renovation techniques with the exception of Clause G3(c) and G3(f) which do not apply.

NOTE: Further information on the renovation techniques for these pipes is available in ISO 11295 and the ISO 11296 series (see Bibliography).

3.17 DUMP POINTS

3.17.1 Soil waste dump points

Dump points, for discharging the contents of holding tank type toilets within caravans and relocatable dwellings shall be in accordance with Figure 3.17.1 and the following:

(a) The concrete base shall be graded to the outlet at a grade of not less than 1 in 60.

(b) The outlet pipework shall be DN 80 or DN 100.

(c) The bayonet connection shall include a sealing cap and hose coupling, and shall be at least 25 mm clear of any obstruction.

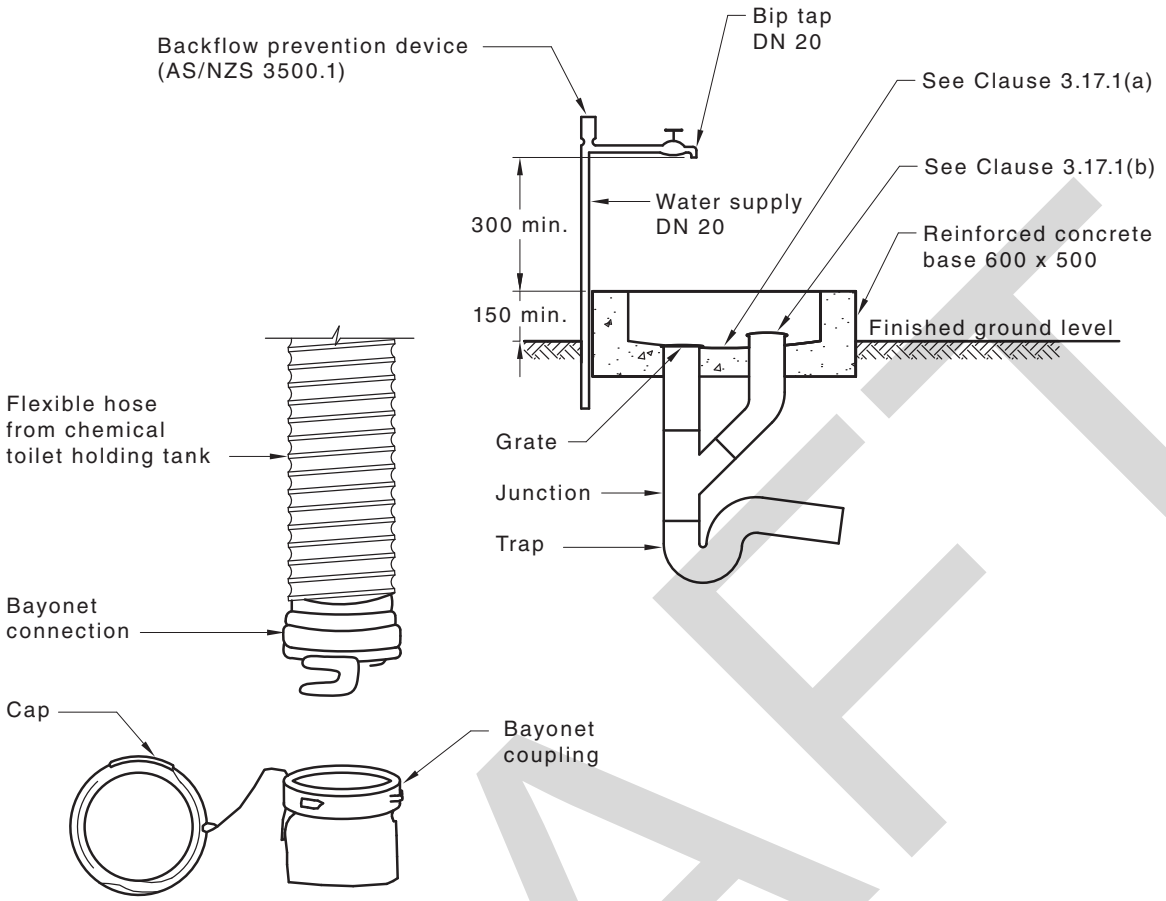

(a) Soil waste dump point

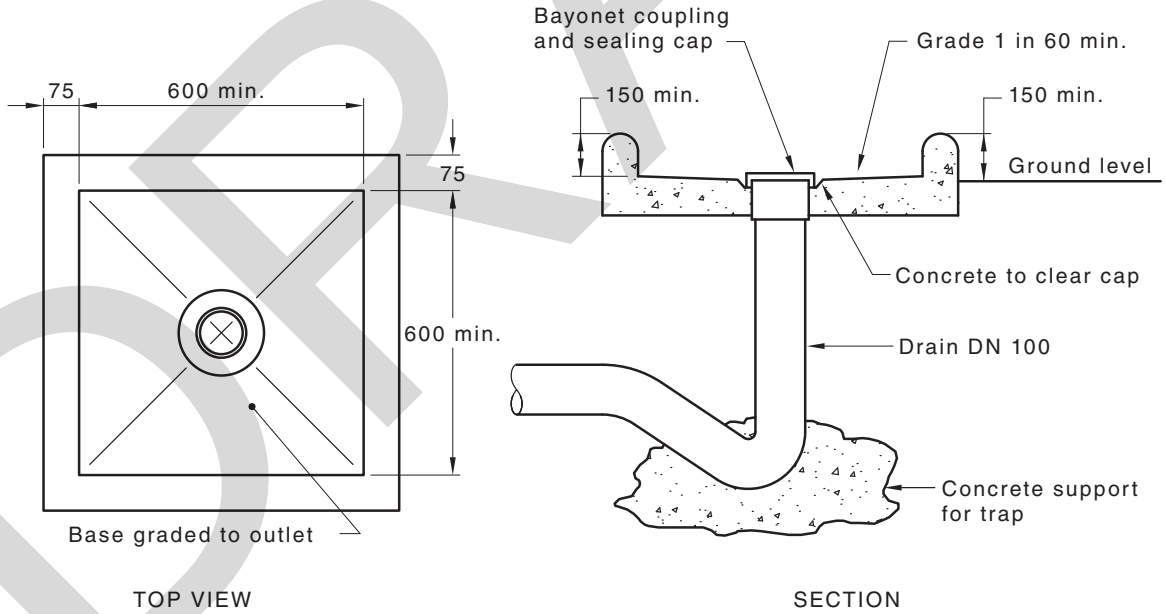

(b) Alternative soil waste dump point

NOTE: Bib tap and backflow prevention device to be provided.

DIMENSIONS IN MILLIMETRES

FIGURE 3.17.1 SOIL DUMP POINTS

3.17.2 Connection points for short-term sites

Where sullage connection points are provided to serve individual caravans or mobile home sites, they shall be constructed in accordance with Figure 3.17.2(A) or Figure 3.17.2(B).

Sullage points shall be positioned to obtain the shortest connection to the caravan and shall be not more than 10 m from the vented drain.

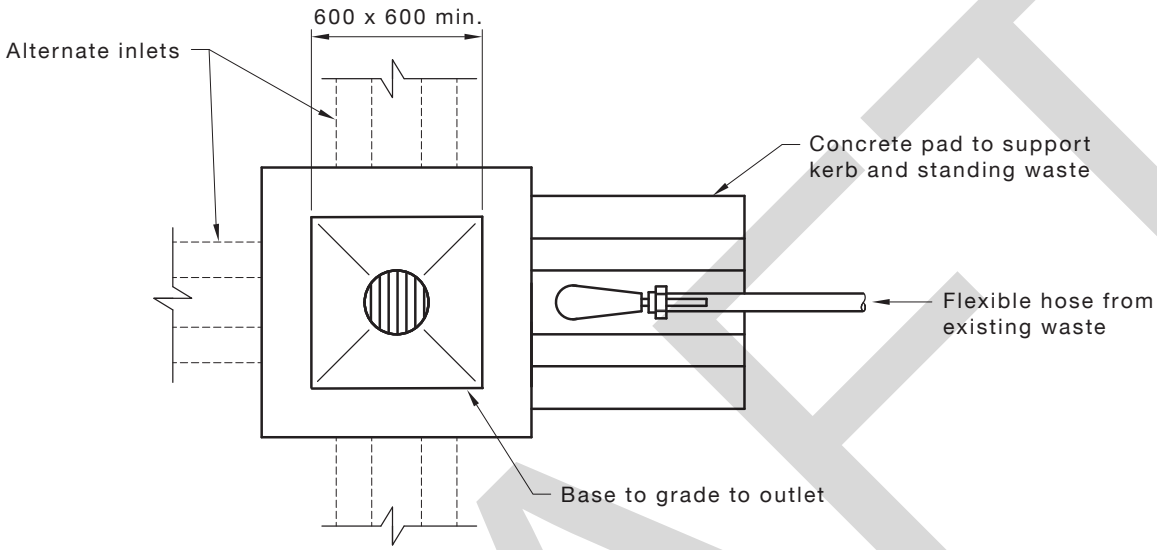

TOP VIEW

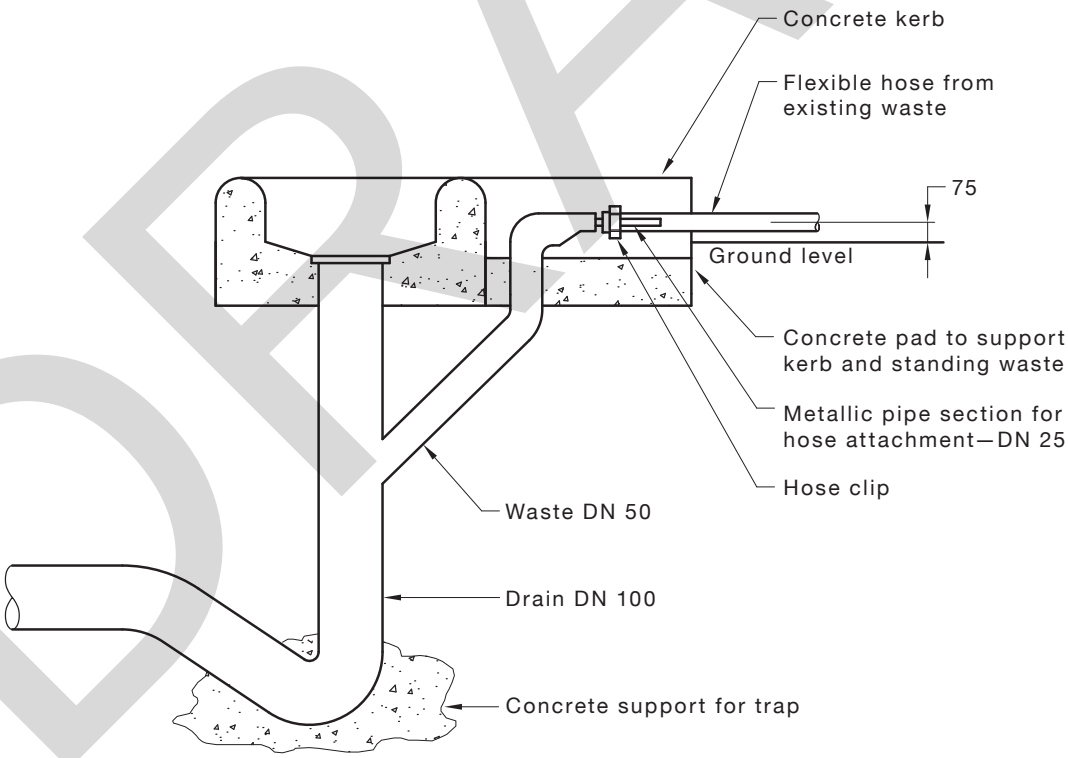

SECTION

NOTE: Hose tap and backflow prevention device to be provided.

DIMENSIONS IN MILLIMETRES

FIGURE 3.17.2(A) SULLAGE DUMP POINT

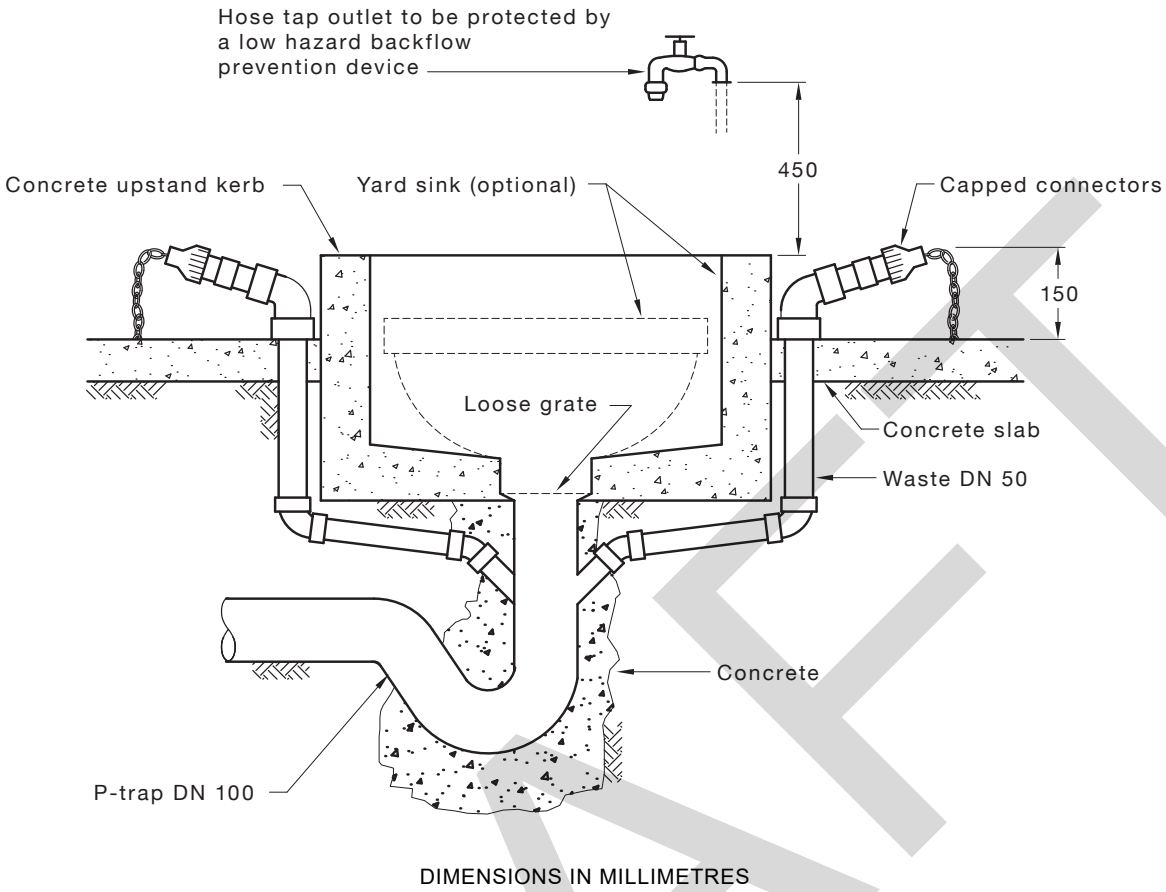

FIGURE 3.17.2(B) SULLAGE DUMP POINT WITH MULTIPLE INLETS

3.18 DRAINS CONNECTED TO NETWORK UTILITY OPERATOR VACUUM SEWAGE SYSTEMS

Drains connected to vacuum sewerage systems shall be installed in accordance with the following:

(a) An inspection shaft connected to the drain with a junction shall be placed as close as practicable to, and upstream of, the collection tank.

(b) The junction inlet to the inspection shaft shall be against the grade of the drain so that any rodding of the line is in the direction away from the collection tank.

(c) Where more than one drain is connected to a collection tank, the spill level of both overflow gullies of the drains shall be installed level with each other wherever practicable.

(d) A DN 100 open vent pipe shall be provided at the upstream end of each drain connected to the collection tank and a DN 100 downstream vent shall be located within 10 m of the collection tank. No fixtures shall be connected between the collection tank and the downstream vent connection.

NOTES:

1 In addition to the open vents, air admittance valves, installed in accordance with Clause 6.9, may be used to provide additional venting of drains connected to a collection tank.

2 Jump-ups should be avoided.

3 See Section 16 for vacuum drainage systems.

3.19 COMMON EFFLUENT DRAINAGE SYSTEM

3.19.1 General

All sanitary plumbing and sanitary drainage in common effluent drainage systems shall conform with the relevant sections of this Standard.

3.19.2 Drainage connections

Drains connected to common effluent drainage systems shall be installed in accordance with the following:

(a) Discharge from fixtures shall pass through a septic tank.

NOTE: Where this is impracticable due to location and available fall, discharge from waste fixtures may pass through a sullage tank.

(b) Drains from septic or sullage tanks to the common effluent drain shall be not less than DN 80 and not more than DN 100 and shall be laid at a grade of not less than 1% (1 in 100).

(c) Induct vents shall not be installed on septic tanks. Where induct vents are installed on an existing septic tank, they shall be removed before connecting the septic tank to a common effluent drainage system.

(d) Inspection openings shall be provided in accordance with Clause 4.7 and shall be included on—

(i) the inlet to an on-site wastewater treatment unit; and

(ii) the outlet of the on-site wastewater treatment unit, within 2.5 m of the tank, where the connecting drain is greater than 10 m in length.

(e) Existing and new drains shall be tested in accordance with Section 15.

(f) Soakage trenches, and stormwater, roof water and subsoil water drainage shall not be connected to a common effluent drainage system.

NOTE: Typical connections are shown in Figures 3.19.2(A), 3.19.2(B), 3.19.2(C) and 3.19.2(D).

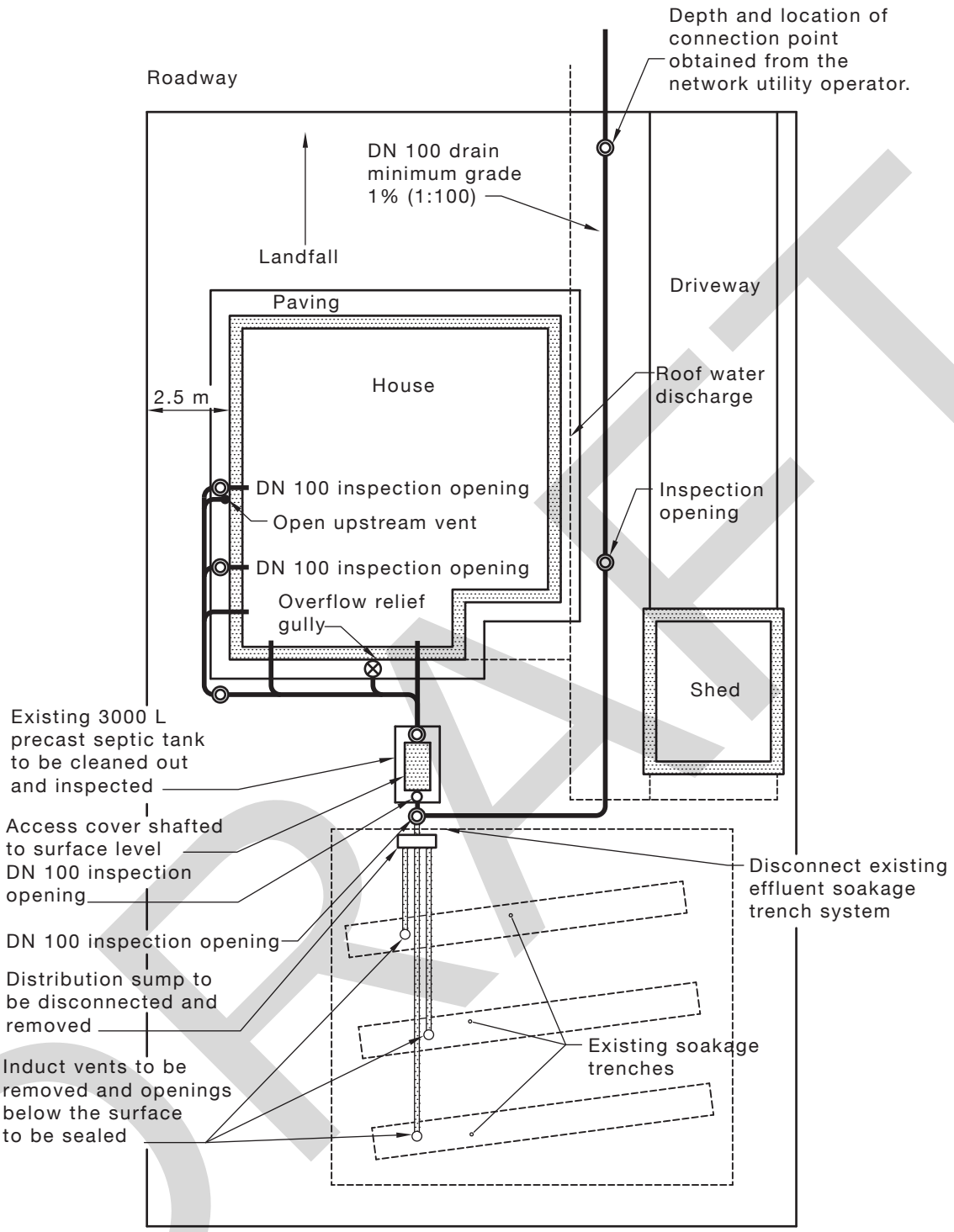

FIGURE 3.19.2(A) TYPICAL SITE LAYOUT PLAN SHOWING CONNECTION DETAILS FOR AN ALL-WASTE SEPTIC TANK SYSTEM

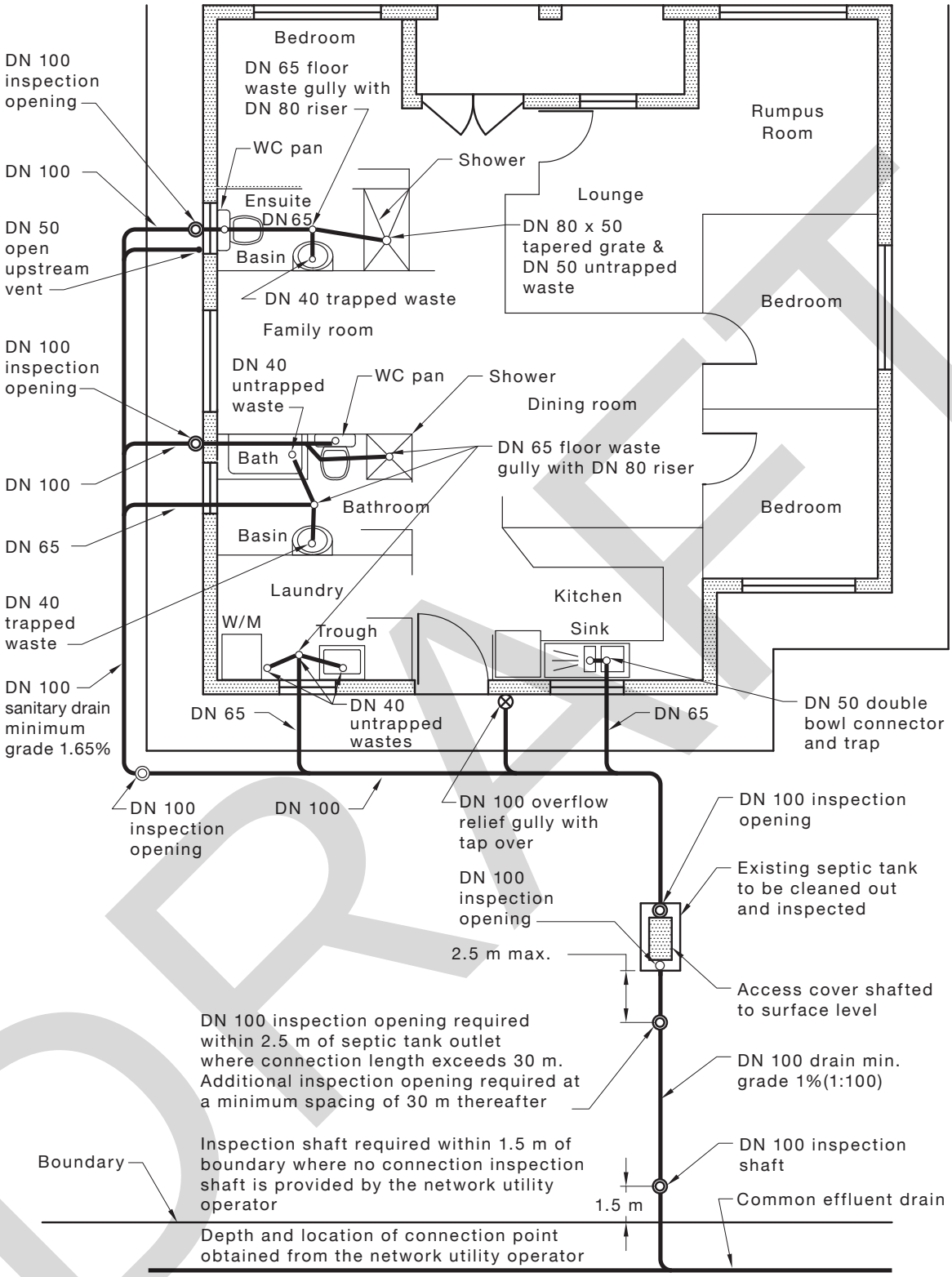

FIGURE 3.19.2(B) TYPICAL CONNECTION OF SEPTIC TANK TO COMMON EFFLUENT DRAIN (EXISTING ALL-WASTE SEPTIC TANK INSTALLATION ONLY)

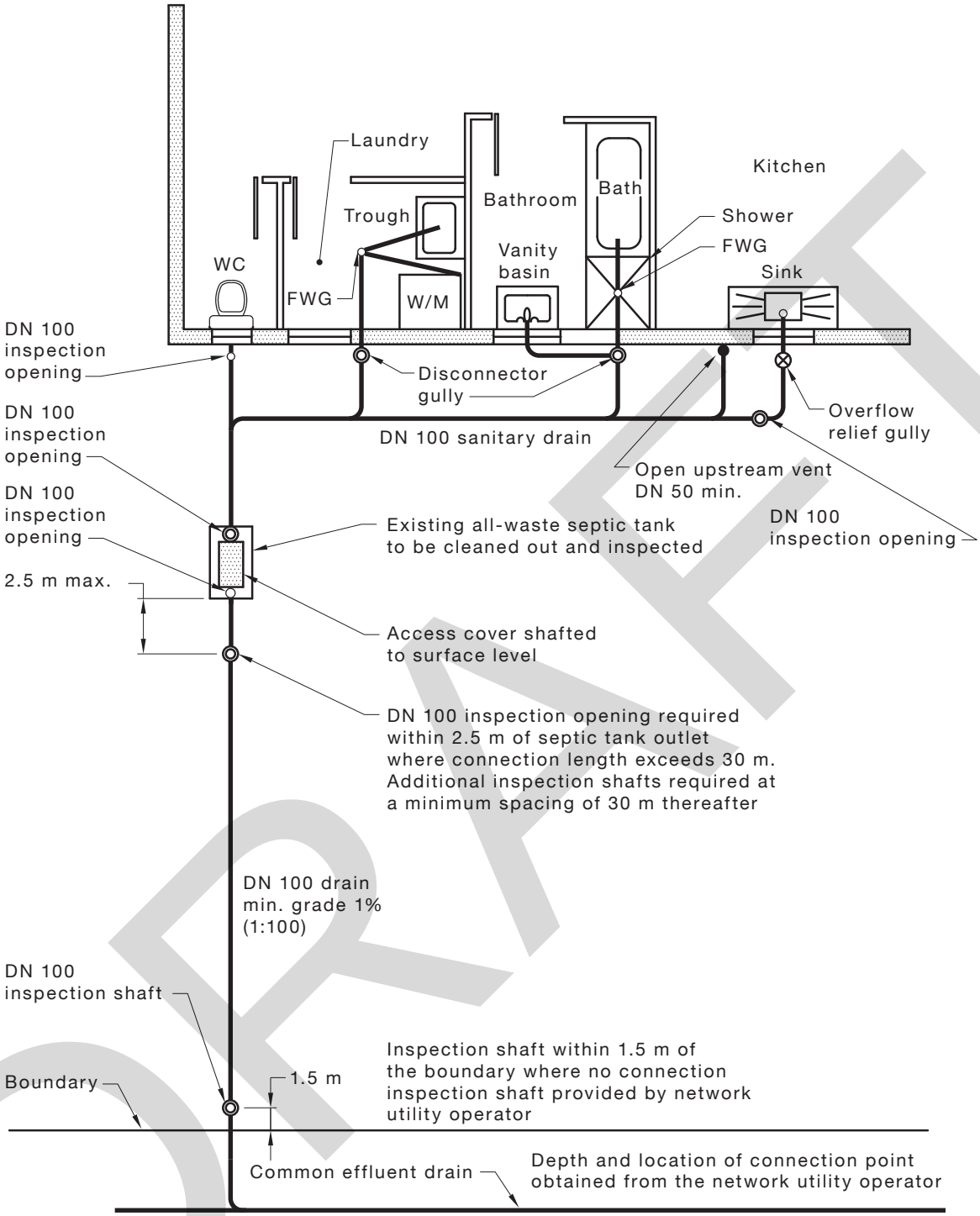

FIGURE 3.19.2(C) TYPICAL CONNECTION DETAILS FOR AN ALL-WASTE SEPTIC TANK SYSTEM

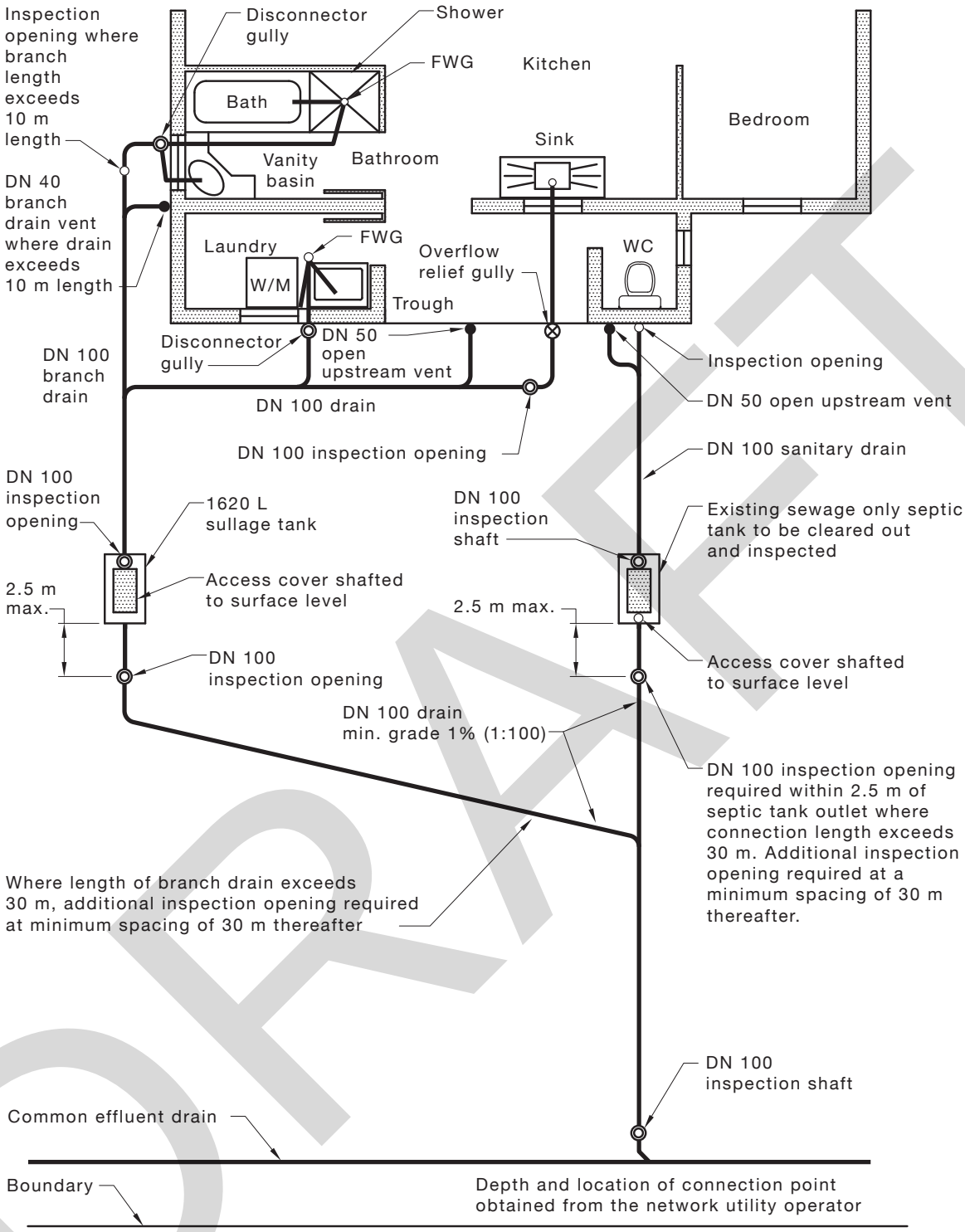

FIGURE 3.19.2(D) TYPICAL CONNECTION DETAILS FOR A SEPTIC TANK AND SULLAGE TANK SYSTEM

3.19.3 Septic tanks

Where septic tanks are part of the effluent system, they shall be sized, constructed and installed in accordance with AS/NZS 1546.1.

Septic tanks shall be inspected for soundness and hydrostatically tested before connection to the common effluent drain.

3.19.4 Sullage tanks

Sullage tanks shall be sized, constructed and installed in accordance with AS/NZS 1546.1.

Sullage tanks shall be inspected for soundness and hydrostatically tested before connection to the common effluent drainage system.

NOTES:

1 The satisfactory performance of common effluent drainage systems is dependent on regular cleaning out and desludging of each septic tank and sullage tank, which should be done once every five years, or sooner, if necessary.

2 The connecting drain from the septic tank to the common effluent drain may require flushing from time to time.

3.20 ON-SITE WASTEWATER TREATMENT UNITS

On-site wastewater treatment units shall be installed in accordance with AS/NZS 1546.1, AS/NZS 1546.2 or AS/NZS 1546.3, as appropriate.

SECTION 4 DRAINAGE SYSTEM

4.1 SCOPE OF SECTION

This Section specifies requirements for components of sanitary drainage systems.

NOTE: Requirements for components of vacuum drainage system areas are covered in Section 16.

4.2 POINT OF CONNECTION

4.2.1 General

Drains connected to the network utility operator's sewer shall be not less than DN 100.

NOTES:

1 When connecting fixtures that operate to a sewer by gravity, care should be taken to ensure that the flood level rim of the lowest fixture or trap is of adequate height above the soffit of the sewer so as to avoid the sewer discharging onto the property under normal operating conditions.

2 Where the height of the lowest fixture or trap in Note 1 cannot be achieved, then consideration should be given to the lowest fixture or trap discharging to the sewer—

(a) through a reflux valve in accordance with Clause 4.5; or

(b) by means of a sewage ejector or pump, conforming with Section 12.

3 Where a sanitary drain is to connect to a network utility operator's sewer, information relating to any restrictions regarding soffit requirements and the point of connection should be obtained from the network utility operator prior to commencing any design.

4 In Australia, some network utility operators manage combined stormwater and sewerage systems. In these cases, connection of surface water and roof water may be permitted to a sanitary plumbing and drainage system. Before any connection of surface water or roof water is made to a sanitary plumbing or drainage system, check with the relevant network utility operator.

C4.2.1 *Whenever drainage works are carried out, necessary measures should be taken to protect the network utility operator's sewers from damage and to prevent the entry of—*

(a) extraneous water;

(b) soil, sand or rock;

(c) the contents of any septic tank; or

(d) any other substance, the discharge of which would impede the operation of the sewer.

4.2.2 Tidal or water-charged locations

Where a point of connection is provided in ground affected by tidal water or a high water table, the connection shall be made so as to prevent the ingress of water to the sewer.

4.3 DRAINS

4.3.1 Below ground

Drains below ground shall—

(a) be laid to an even grade, be straight and have no lipped joints or internal projections;

(b) have a minimum number of changes of grade and direction;

(c) be sized in accordance with the fixture unit loading given in Table 3.3.1;

(d) be continuously supported under the barrel, other than for cast iron and ductile iron pipes and fittings;

(e) be protected against damage;

(f) be watertight;

(g) have the interior of each pipe cleared of any foreign matter before it is laid and prior to commissioning; and

(h) have a jump-up installed to connect drains at different elevations.

NOTES:

1 The person or authority having rights over an easement may have specific requirements for drains laid in proximity of the easement or for drains laid within or passing through the easement.

2 For protection against termite infestation under slab and penetrations of slab, see NCC.

4.3.2 Above ground under buildings

Drains may be installed above ground under buildings, as follows:

(a) The drain shall be protected from mechanical damage.

(b) Support and fixing shall conform with Clause 10.2.

(c) Provision for expansion shall be made appropriate to materials and their application.

(d) The drain shall satisfy the requirements of Clause 3.6 as appropriate.

4.3.3 Changes of direction

Changes of direction or gradient in drains shall be effected by the use of bends or junction fittings, or at inspection chambers.

4.3.4 Maximum length of fixture discharge pipes

The maximum length of fixture discharge pipe without venting shall be in accordance with Appendix C.

4.4 INSPECTION SHAFTS AND BOUNDARY TRAPS

4.4.1 General

The main drain shall be provided with either an inspection shaft in non-boundary trap areas, or a boundary trap in boundary trap areas, located at or near the point of connection to the sewer.

NOTES:

1 Inspection shafts and boundary traps located in an area that is subject to flooding should comply with the requirements of the relevant authority.

2 Boundary trap or inspection shafts cannot terminate within buildings as defined in the BCA area referred to as habitable.

4.4.2 Inspection shafts and boundary trap risers

4.4.2.1 *Installation*

The following applies to inspection shafts and boundary trap risers:

(a) They shall terminate at or near ground or surface level with a removable airtight inspection cap of the same diameter as the shaft or riser. For boundary trap risers, a low level vent shall be installed in accordance with Clause 3.9.2.3.

(b) The cap shall be sealed into the shaft or riser.

(c) Where the inspection shaft or boundary trap riser is subject to vehicular traffic, the cap may be installed below finished surface level. Access shall be provided in accordance with the following:

(i) A heavy-duty trafficable cover shall be installed at finished surface level above and independent of the cap.

(ii) The cover shall be supported so that no load can be transmitted onto the shaft.

(iii) The shaft shall be terminated immediately below the underside of the cover.

(d) Risers shall be installed vertically with no offsets greater than 5°.

4.4.2.2 *Location*

The inspection shaft or boundary trap riser shall be located—

(a) wholly within the property served;

(b) as close as practicable to the boundary;

(c) clear of all authority easements;

(d) as near as practicable to the point of connection;

(e) in the open air, except as provided in Clause 4.4.2.3;

(f) in an accessible position; and

(g) so that the inspection cap is not covered from view, except as allowed in Clause 4.4.2.1(c).

4.4.2.3 *Alternative locations*

Where the requirements of Clause 4.4.2.2 cannot be met, an inspection shaft and boundary trap riser may be sited at other locations as follows:

(a) *Under cover* An inspection cap may be installed under a roofed area, provided the cap is—

(i) located at finished surface level; and

(ii) readily accessible for inspection, rodding and plunging with not less than 1 m clear space vertically above the inspection cap.

(b) *In a recess* If all or part of a building is constructed up to the boundary of the property, and if this makes it impracticable to site the inspection cap in the open air or within a building under cover, the inspection cap may be installed within a recess constructed in the wall of the building, provided—

(i) the inspection cap is airtight;

(ii) the recess is constructed to provide a clear space of at least 1 m above the inspection cap;

(iii) at least 100 mm clear space is provided on each side and to the rear of the inspection cap; and

(iv) the recess has a removable panel.

4.4.3 Installation of inspection shafts

4.4.3.1 *General*

Inspection shafts shall be provided at the lower downstream end of a drain in accordance with the following:

(a) A junction shall be installed in the graded drain with the branch of the junction extended vertically upwards to the surface to form a shaft.

(b) Where a jump-up is constructed within a property and is not more than 3 m from the point of connection, the jump-up shall be extended upwards to the surface level to form a shaft.

(c) No branch drain or fixture discharge pipe shall be connected to an inspection shaft where the shaft is constructed from a square junction installed in a graded drain.

(d) The jump-up shall be supported by placing a concrete footing not less than 100 mm thick under the bend, with a width of not less than 100 mm beyond the sides of the shaft, and extending up to the centre-line of the drain.

An inspection chamber with an open channel or maintenance shaft in accordance with AS/NZS 4999 may take the place of an inspection shaft.

4.4.3.2 *Size*

Inspection shafts shall be—

(a) the same size as the drain for drains up to DN 150;

(b) not smaller than DN 150 for drains larger than DN 150; or

(c) the same size as the jump-up where an inspection shaft is constructed by extending a jump-up.

4.4.4 Installation of boundary traps

4.4.4.1 *Outside buildings*

Boundary traps located outside buildings shall be installed in accordance with the following:

(a) Where the point of connection is provided in a vertical section of the sewer within the property, a boundary trap shall not be installed in the same trench as the sewer jump-up.

(b) A downstream vent conforming with Clause 3.9.2.2 shall be installed at the boundary trap riser.

(c) Boundary traps of materials, other than cast iron, shall be directly supported on a solid foundation by placing under the trap a concrete pad that shall—

(i) be not less than 100 mm thick; and

(ii) extend upwards to the inlet socket of the trap.

(d) The shaft shall be protected and supported during the installation and placement of backfilling.

4.4.4.2 *Inside buildings*

Boundary traps located inside buildings and installed above the ground or floor surface shall be—

(a) protected against mechanical damage;

(b) located as close as practicable to and within the boundary line; and

(c) supported independently of the drain.

4.4.4.3 *Size*

The size of the boundary traps and risers shall be not smaller in size than the drain that discharges to it, or smaller than DN 100.

4.5 REFLUX VALVES

4.5.1 Location

A reflux valve shall be located wholly within the property and be accessible.

NOTE: This may be achieved by using either an access chamber or a riser shaft to the finished surface level.

4.5.2 Installation

A reflux valve shall be installed where—

(a) the minimum height of the overflow relief gully and the lowest fixture specified in Clause 4.6.6.6 cannot be achieved; or

(b) a fixture is located in a basement and discharges to a sewage ejector or wet well and could be affected by a surcharge from a fixture at a higher level.

4.5.3 Surcharging sewer

Where a reflux valve is to be installed to protect against surcharges, it shall be located in accordance with the following:

(a) Where the drain has an inspection shaft, the reflux valve shall be installed adjacent to the shaft.

(b) Where the drain has a boundary trap, the reflux valve shall be located immediately downstream from and adjacent to the outlet of the boundary trap.

4.5.4 Reflux valve chambers

Except where a reflux valve is installed in an accessible position within a building or can be fully serviced and maintained from finished surface level, all reflux valves shall be installed within an inspection chamber conforming with Clause 4.8.

NOTE: For reflux valves, see Clause 10.12.2.

4.6 GULLIES

4.6.1 General

Gullies may be used for one or more of the following purposes:

(a) As relief in the event of sewage surcharge (overflow relief gully).

(b) To provide disconnection between waste discharges and the remainder of the sewerage installation (disconnector gully).

4.6.2 Installation

Gullies shall—

(a) be of the self-cleansing type;

(b) have the top of the gully riser provided with a grating to relieve surcharge; and

(c) where installed below ground—

  (i) be supported on a concrete footing of a thickness not less than 100 mm, with a width not less than 100 mm beyond the sides of the trap and extending upwards to not less than 100 mm above the base of the gully; and

  (ii) have the top of the gully riser protected from damage at finished surface level (e.g. by means of a concrete surround).

4.6.3 Maintenance of water seal

The water seal shall be permanently maintained in a gully (see Note 1) by—

(a) the discharge from a waste fixture or floor waste gully in accordance with Table 4.6.3;

(b) the discharge from a waste stack of not more than five floors in height;

(c) water from a hose tap located a minimum of 450 mm above the grating where no waste pipe discharges into gully;

(d) the discharge from temperature/pressure-relief valves and/or expansion control valves (see Note 2);

(e) the discharge from a charge pipe in accordance with Figure 4.6.8.1 and Clause 4.6.8;

(f) discharges from refrigeration condensate lines: or

(g) waste fixtures or waste stacks connected into a gully riser, discharging below the level of the grating and above the surface level of the water seal (see Figure 4.6.6.5).

NOTES:

1 For two examples of water seals permanently maintained in a gully, see Figure 4.6.6.5.

2 For temperature limitations, see Clause 2.3(b).

TABLE 4.6.3

CONNECTION OF FIXTURES TO DISCONNECTOR GULLIES

Fixture	Maximum unvented length of waste pipe m
Basin or bidet with DN 40 traps and waste pipes	3.5
All other waste fixtures and floor waste gullies with DN 50 or smaller waste pipes	6
Floor waste gullies and fixtures with DN 65 or larger waste pipes	10

NOTES:

1 Bends to be kept to a minimum.

2 For New Zealand, bidets do not discharge to disconnector gullies.

4.6.4 Soil fixtures

Discharges from soil fixtures shall not connect, either directly or indirectly, to a disconnector or overflow relief gully.

C4.6.4 *In Australia, some network utility operators manage combined stormwater and sewerage systems. In these cases, connection of surface water and roof water may be permitted to a sanitary plumbing and drainage system. Before any connection of surface water or roof water is made to a sanitary plumbing or drainage system, check with the relevant network utility operator.*

4.6.5 Disconnector gullies inside buildings

A disconnector gully may be located within a building, provided—

(a) the gully riser extends to the finished surface level and is sealed with a removable airtight cover;

(b) a DN 50 vent pipe, branching from the riser pipe or a fitting, extends at a grade of not less than 1.25% and terminates with a grating at an external wall of the building—

(i) above the overflow level of the lowest internal fixture connected to the sealed disconnector gully;

(ii) at least 75 mm above the finished surface level; and

(iii) in areas likely to be inundated, in accordance with Clause 4.6.6.8;

(c) fixtures or appliances are not connected to the vent pipe; and

(d) air admittance valves are not used to vent sealed disconnector gullies.

Where it is not practicable to extend the vent to an external wall, the vent may terminate in the atmosphere external to a building in accordance with Clause 6.8.4.

4.6.6 Overflow relief gullies

4.6.6.1 *General*

At least one overflow relief gully shall be installed in the drain, except as provided in Clause 4.6.6.2. Disconnector gullies conforming with the requirements of Clauses 4.6.6.3 to 4.6.6.7 may be used as overflow relief gullies.

NOTE: For multi-unit developments, see Section 14.

4.6.6.2 *Omission of overflow relief gully*

An overflow relief gully may be omitted where—

(a) the drain serves fixtures in a toilet block or an amenities building and is located in a park or reserve, provided the floor of the building is graded to fall towards an external doorway;

(b) the site is entirely built on and it is not possible to locate the gully in any of the alternative locations specified in Clause 4.6.6.5, and the fixtures on the ground floor discharge through a reflux valve to the sewer by gravitation;

(c) the lowest fixtures connected are located on floor levels that are 3 m or more above ground surface level at the point of connection to the sewer; or

(d) an alternative overflow relief point(s), equal to or the equivalent cross-section area of the drain served, is provided to the drainage systems.

4.6.6.3 *Size*

The size of overflow relief gullies shall be determined from the size of the largest section of the main drain as given in Table 4.6.6.3.

TABLE 4.6.6.3

SIZE OF OVERFLOW RELIEF GULLIES

Size of main drain DN	Size of gully outlet DN
100 and 150	100
>150	150

4.6.6.4 *Location*

The overflow relief gully shall be located—

(a) within the boundaries of the property;

(b) external to the building;

(c) so that the top of the gully is accessible and positioned where any discharge will be noticeable; and

(d) with clear access for more than 2 m above the top of the gully grate, and not be enclosed.

4.6.6.5 *Alternative locations*

Where it is not possible to conform with Clause 4.6.6.4, an overflow gully may be located as follows:

(a) Recessed within an external wall [see Figure 4.6.6.5(b)], provided—

(i) the recess is not less than 300 mm wide and 600 mm high, measured above the top of the gully riser;

(ii) the centre of the riser is not greater than 300 mm from the face of the building and the riser is fully accessible; and

(iii) the base of the recess is graded away from the building.

(b) Located within a building [see Figure 4.6.6.5(a)], provided—

(i) the gully riser extends to floor level and is sealed with a removable airtight cover;

(ii) an overflow pipe of the same size as the gully riser is installed at a grade of not less than 1.25% and terminates in the open air at an external wall of the building in accordance with Clauses 4.6.6.6 and 4.6.6.7, and areas affected by flooding conform with Clause 4.6.6.8;

(iii) the overflow pipe is provided with a perforated removable or hinged cover that will not restrict discharge under surcharge conditions; and

(iv) fixtures or appliances are not connected to the overflow pipe.

NOTE: Additional gullies may be installed—

(a) to receive the discharge from a domestic swimming pool;

(b) on installations that serve multiple residential buildings and which have separate yards provided for each occupancy;

(c) where a lower building may be affected by surcharge from a higher building;

(d) where a lower fixture in a building may be affected by surcharge from higher fixtures; or

(e) where such gullies need not conform with the requirements of Clause 4.6.6.6.

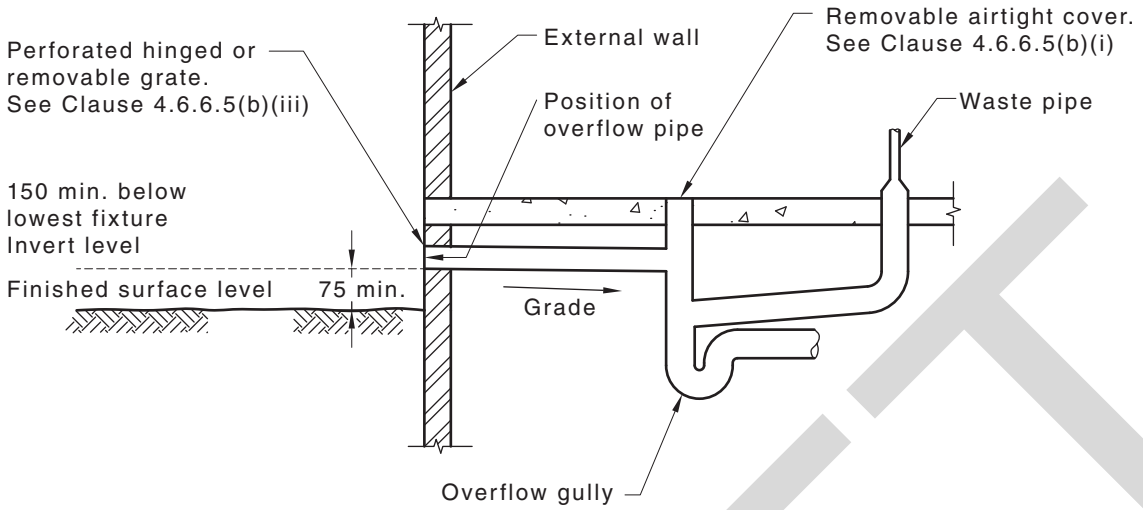

(a) Typical details of overflow relief gully inside building

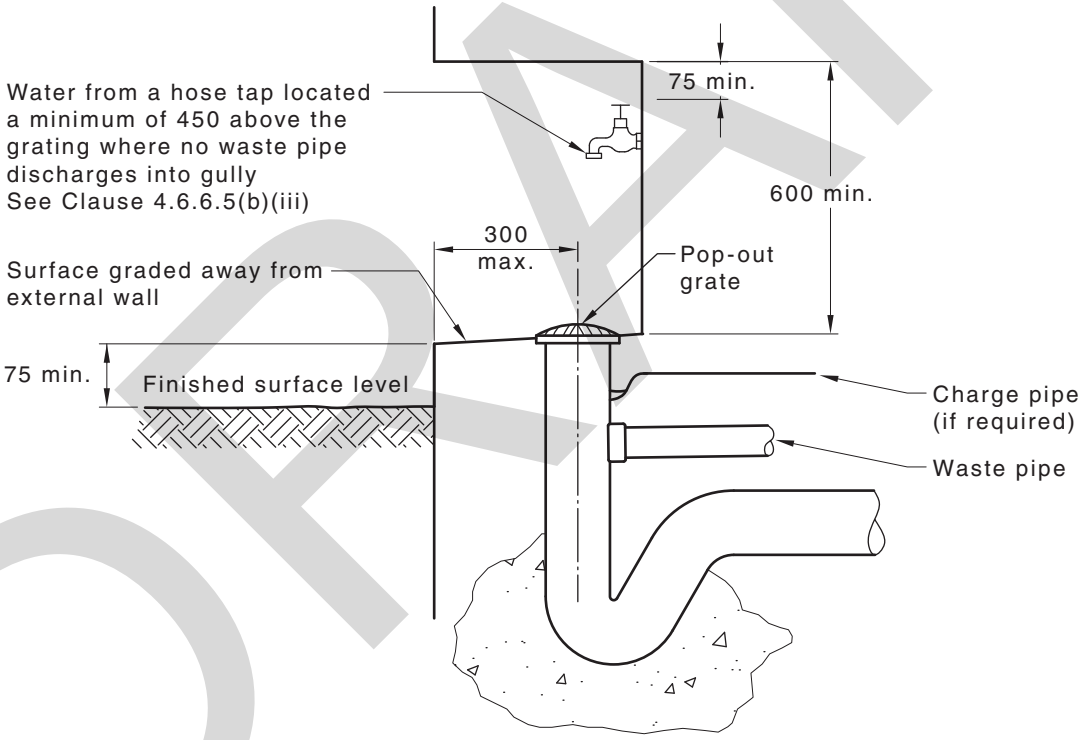

(b) Typical details of overflow relief gully positioned in recess

DIMENSIONS IN MILLIMETRES

FIGURE 4.6.6.5 POSITIONING OF OVERFLOW RELIEF GULLY

4.6.6.6 *Height of overflow point below lowest fixture*

A minimum height of 150 mm shall be maintained between the top of the overflow gully riser and the lowest fixture connected to the drain.

This height shall be measured vertically from the overflow level of the gully riser, or from the invert level of the overflow pipe, to the appropriate point given in Table 4.6.6.6.

TABLE 4.6.6.6

POINT OF MEASUREMENT ON FIXTURES FOR HEIGHT ABOVE OVERFLOW GULLY

Fixture	Point of measurement
Soil fixture with an integral trap	Top surface level of the water seal
Floor waste gully or shower	Top surface level of the grate
Soil fixture located in an outbuilding or room, the flow of which is graded to an external doorway	Overflow rim of the fixture
Other fixtures (includes greywater diversion devices)	Top surface level of the fixture outlet

4.6.6.7 *Height above surrounding ground*

The minimum height between the top of the overflow gully riser, or the invert of the overflow pipe, and the finished surface level shall be 75 mm, except where the gully riser is located in a path or a paved area, where it shall be finished at a level so as to prevent the ponding and ingress of water.

4.6.6.8 *Height in flood-affected areas*

The top of the gully riser in flood-affected areas shall be—

(a) finished at a level not less than 150 mm above the declared flood level; or

(b) sealed with a removable watertight cover with a vent of the same size as the gully, terminating at a level not less than the declared flood level and in accordance with Clause 4.6.6.6.

Where either of the above requirements cannot be achieved, no sanitary drain shall gravitate to the network utility operator's sewer.

4.6.7 Floor waste gullies

4.6.7.1 *General*

For the purpose of Clause 4.6.7, a floor waste gully shall be deemed to be a fixture trap.

NOTE: For a typical connection of waste pipe to a floor waste gully, see Figure 4.6.7.1.

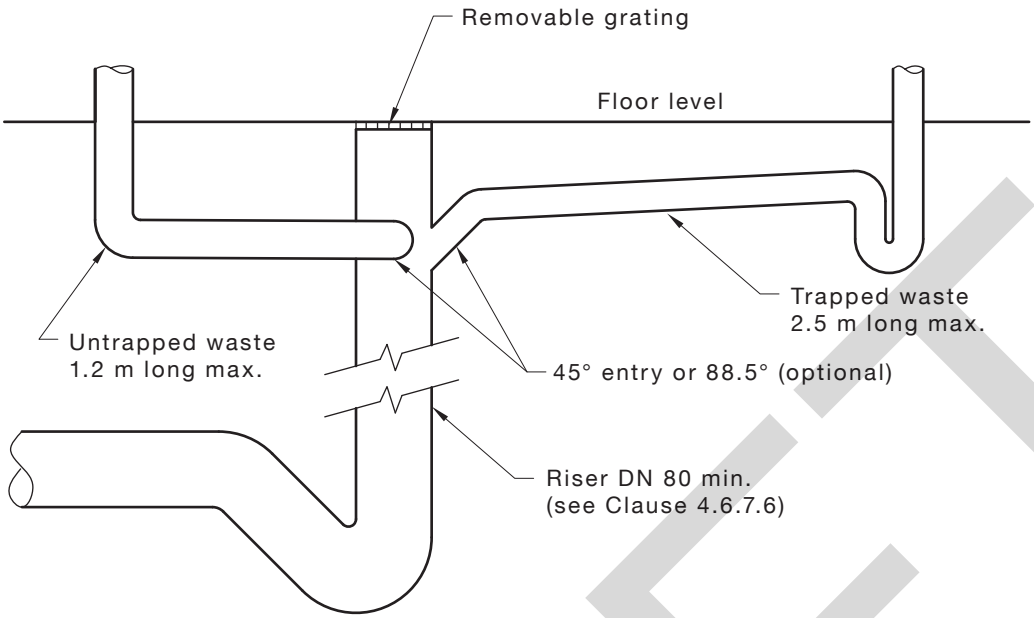

NOTE: See Table 4.6.7.7 for minimum riser heights.

FIGURE 4.6.7.1 TYPICAL CONNECTION OF WASTE PIPES TO A FLOOR WASTE GULLY

4.6.7.2 *Discharge to floor waste gullies*

Fixtures listed in Table 4.6.7.2, and fixture pairs in accordance with Clause 6.4.4, may be connected to floor waste gullies and, except for tundishes, shall be located within the same room as the gully.

Basins and drinking fountains that discharge to a floor waste gully shall have a trap installed immediately adjacent to the outlet of the fixture.

NOTE: Where it is known that the discharge may cause a foaming problem, fixtures should not be connected so as to discharge through a floor waste gully.

TABLE 4.6.7.2
DISCHARGE TO FLOOR WASTE GULLIES

Waste fixture	Maximum length of waste pipe m		
	Connected to riser of floor waste gully		Connected to submerged inlet floor waste gully (see Figure 4.6.7.3)
	Fixture untrapped	Fixture trapped	Fixture trapped or untrapped
Bain-marie, sterilizer	1.2	2.5	Not allowed
Bar sink (commercial), glass-washing machine	1.2	2.5	Not allowed
Bar sink (domestic)	1.2	2.5	2.5
Basin, drinking fountain	Not permitted	2.5	2.5 (trapped only)
Bath, shower/bath	1.2	2.5	2.5
Bidet	1.2	2.5	Not applicable
Cleaners' sink	1.2	2.5	Not allowed
Clothes-washing machine	1.2	2.5	2.5
Laundry and ablution trough	1.2	2.5	2.5
Refrigerated cabinet	1.2	2.5	2.5
Shower	1.2	2.5	2.5
Tundish (see Clause 4.6.7.8)	10.0	10.0	10.0

NOTE: Floor waste gullies or similar traps directly connected to the drainage system and subjected to infrequent use shall be provided with an approved means of maintaining their water seals.

4.6.7.3 *Connection of fixtures*

Each fixture, or fixture pair that is connected to a floor waste gully shall be connected by a separate waste pipe at a grade of not less than 2.5% and with a length not exceeding that specified in Table 4.6.7.2.

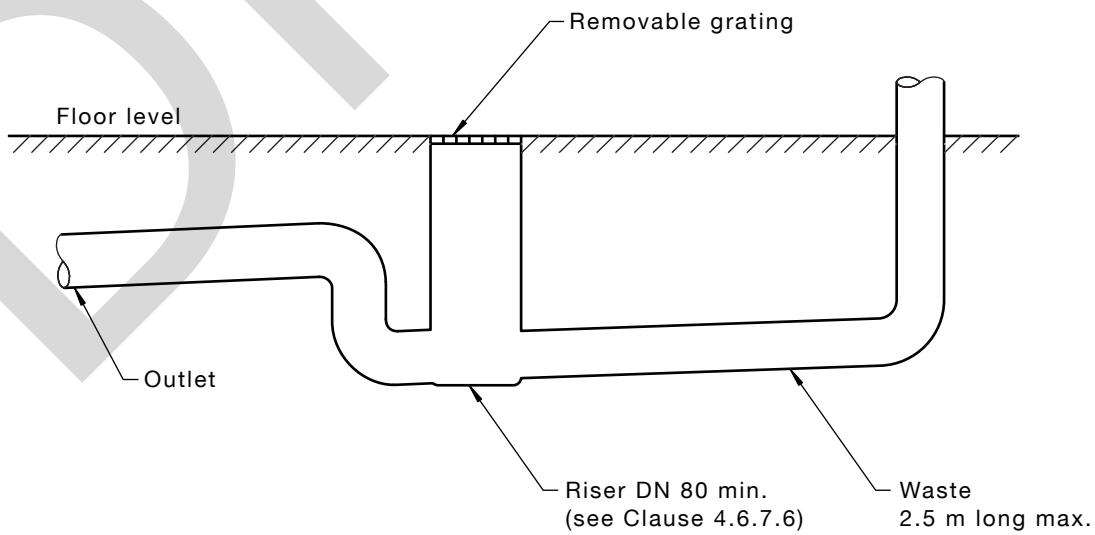

FIGURE 4.6.7.3 SUBMERGED ENTRY FLOOR WASTE GULLY

4.6.7.4 *Waste pipes discharging to floor waste gullies (FWGs)*

Waste pipes discharging to FWGs shall not be extended and trap vents shall not be installed on fixture discharge pipes.

4.6.7.5 *Refrigerated coolrooms and air-conditioning return air plenums*

Floor waste gullies shall not be installed in any refrigerated coolroom, air-conditioning return air plenum or similar structure.

4.6.7.6 *Removable grate*

Floor waste gullies shall be installed with an accessible removable grate and have a riser of not less than DN 80 to finished surface level. Where the sole function of the floor waste gully is to dispose of water spillage and wash-down water, a minimum DN 50 riser may be used.

4.6.7.7 *Height of gully riser*

The height of the gully riser shall be measured from the top of the water seal to the floor surface level and shall conform with the following:

(a) For floor waste gullies with connections to the gully riser—

(i) the minimum height shall conform with Table 4.6.7.7; and

(ii) the maximum height shall be 600 mm.

(b) For floor waste gullies with submerged inlets, the minimum height shall be 100 mm.

NOTE: The maximum height maybe extended to 1 m when receiving the discharges from plant rooms located above ground floor level.

TABLE 4.6.7.7

MINIMUM HEIGHT OF FLOOR WASTE GULLY RISERS

Waste fixtures connected to gully riser	Size of gully riser	Minimum height, mm (water seal to floor level)	
	DN	88° entry	45° entry
All waste fixtures including maximum one bath	80 100	200 150	150 100

4.6.7.8 *Discharges from tundishes*

In addition to the discharges referred in Table 4.6.6.7, tundishes receiving discharges from water heater drains, air-conditioning units, other condensate lines, and the like, may discharge to a floor waste gully. The maximum length of the unvented discharge pipe shall not exceed 10 m.

NOTE: For a typical example, see Figure 4.6.7.8.

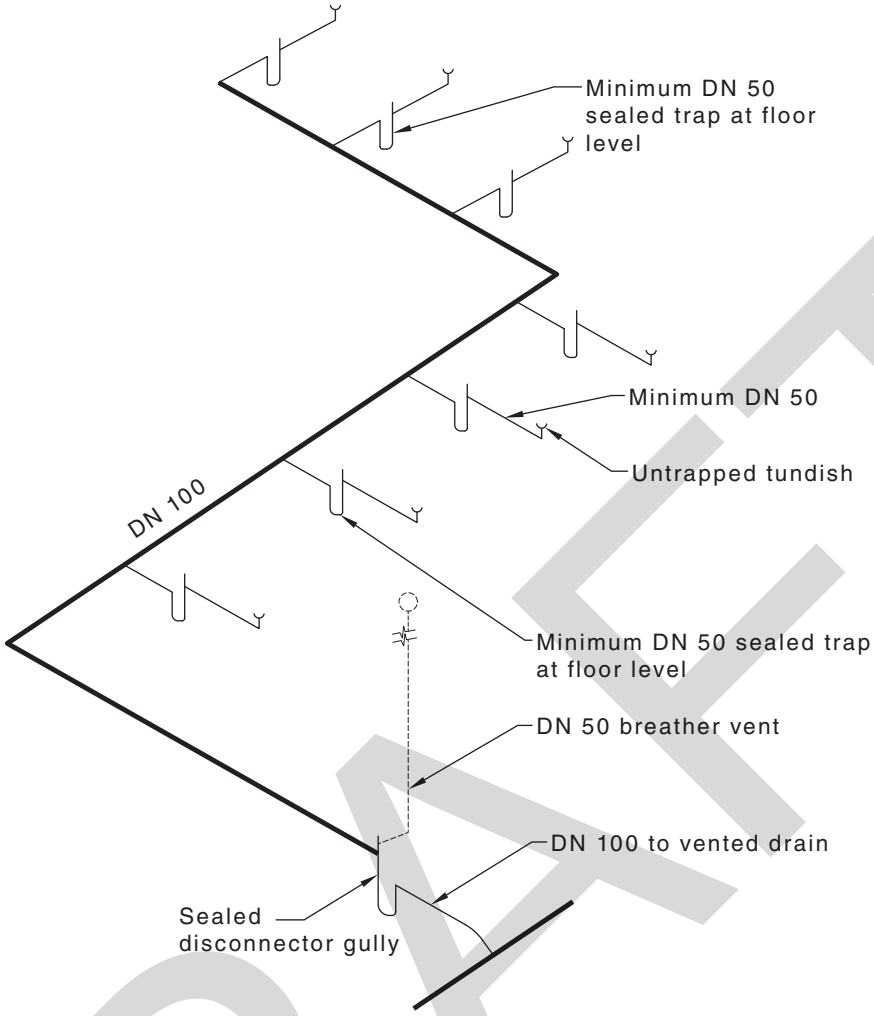

NOTES:

1 Maximum unvented length 10 m.

2 DN 50 open vent required if more than 10 m (not air admittance valve).

3 Sealed disconnector gully inside building installed in accordance with Clause 4.6.5.

4 DN 100 at minimum grade 1:100.

FIGURE 4.6.7.8 TYPICAL UNTRAPPED TUNDISH CONNECTION TO SEALED DISCONNECTOR GULLY VIA SEALED FLOOR WASTE GULLY

4.6.7.9 *Size of gully trap outlet*

The minimum size of floor waste gully outlets shall be as specified in Table 4.6.7.9. Where the sole function of the floor waste gully is to dispose of water spillage and wash-down water, a minimum DN 50 outlet may be used.

TABLE 4.6.7.9

FLOOR WASTE GULLY OUTLET SIZE

Maximum number of fixture units discharging into gully trap	Minimum nominal size of outlet DN
3	50
10 (including the discharge from not more than one bath)	65
15	80

NOTE: A shower outlet may be used as a floor waste gully.

4.6.7.10 *Connection of waste pipes*

Individual waste pipes shall connect—

(a) to a floor waste gully riser at an angle between 45° and 88°, as close as practicable above the water seal; or

(b) to a submerged inlet floor waste gully riser at an angle of 88°.

4.6.7.11 *Size of waste pipes from fixtures*

The size of waste pipes from fixtures connecting into floor waste gullies shall be as given in Table 6.2(A).

4.6.8 Charging floor waste gullies

4.6.8.1 *General*

Where a floor waste gully is located in a position that cannot receive a waste discharge, the water seal shall be maintained by one of the following means:

(a) A charge pipe from a flushing device connected at the heel or the base of the flush pipe with a union. The charge pipe shall enter the floor waste gully at 45°, not less than 50 mm above the water seal and shall be silver brazed or joined by a union to the riser as shown in Figure 4.6.8.1(b).

(b) A charge pipe from a tap set or a drain from a water heater relief valve, which shall drain over a tundish so that the air gap is maintained as shown in Figure 4.6.8.1(a).

(c) A charge pipe extended from a mechanical or electronic trap priming device to the floor waste gully within the same room or compartment as shown in Figure 4.6.8.1(c).

(d) Hose tap installed in the same room, if floor is graded to the floor waste gully.

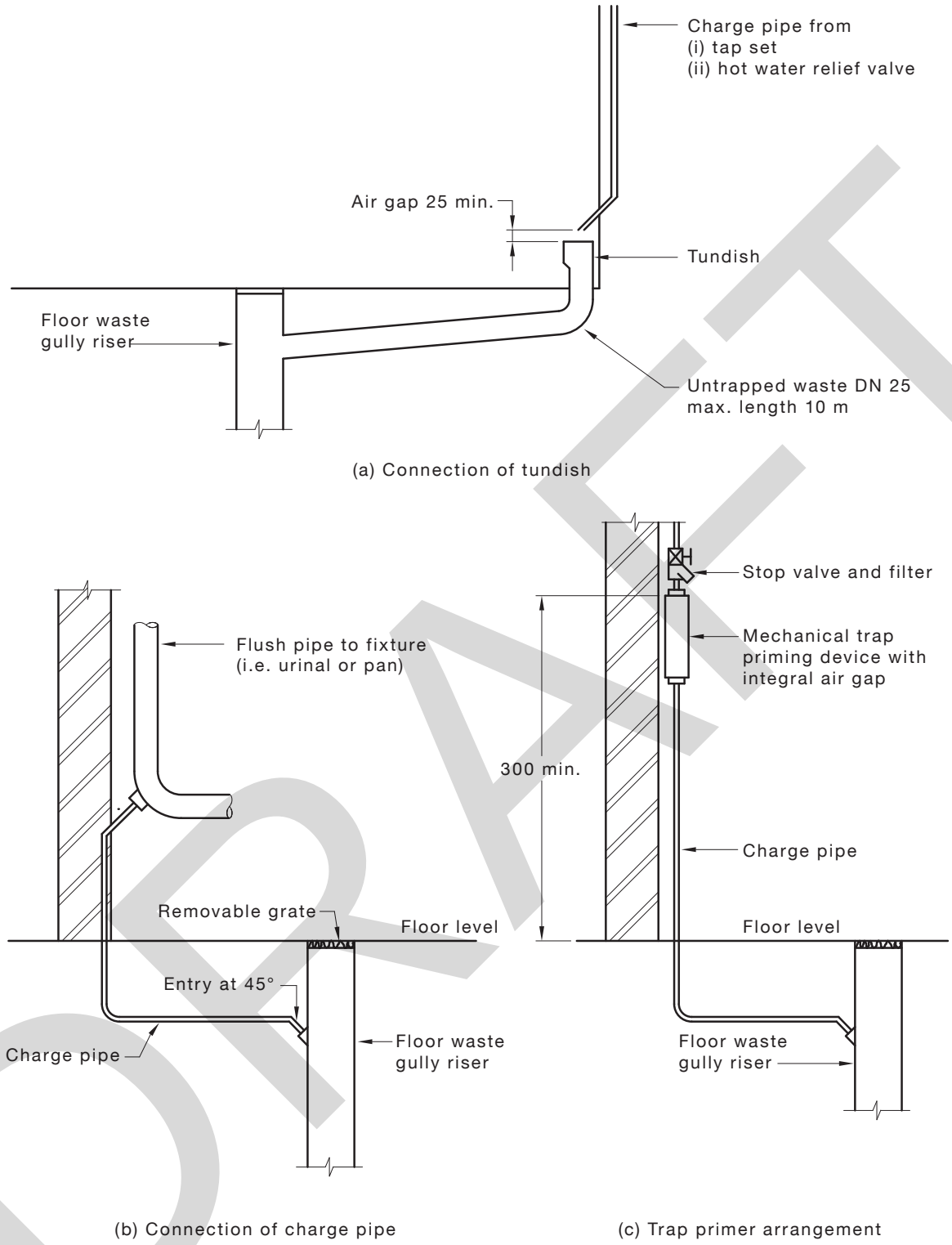

DIMENSIONS IN MILLIMETRES

FIGURE 4.6.8.1 CONNECTIONS OF CHARGE PIPES TO FLOOR WASTE GULLY

4.6.8.2 *Installation of charge pipes*

Charge pipes shall be in the size range of DN 6 to DN 15. Charge pipes from flushing devices, taps sets or water heater relief valve drains shall not exceed 10 m in length.

NOTE: The connection of a charge pipe to a floor waste gully riser should not restrict the bore of the riser or impede access for maintenance of the gully.

4.7 INSPECTION OPENINGS (IOs)

4.7.1 Location

Except where inspection chambers are provided, inspection openings for maintenance purposes shall be provided—

(a) outside of a building, not further than 2.5 m, along each branch drain connecting one or more water closets or slop hoppers;

(b) at intervals of not more than 30 m, with a minimum of one inspection opening on each main drain;

(c) at the connection to the network utility operator's sewer if not provided by the network utility operator;

(d) on the downstream end of the drain where any drain passes under a building except where waste fixtures only are concerned;

(e) where any new section of drain is connected to an existing drain;

(f) immediately at or upstream of the upper bend of a jump-up;

(g) at every change in horizontal direction of greater than 45° (New Zealand only); and

(h) at every change in gradient greater than 45° (New Zealand only).

NOTE: For typical provision of inspection opening, see Figure 4.7.1.

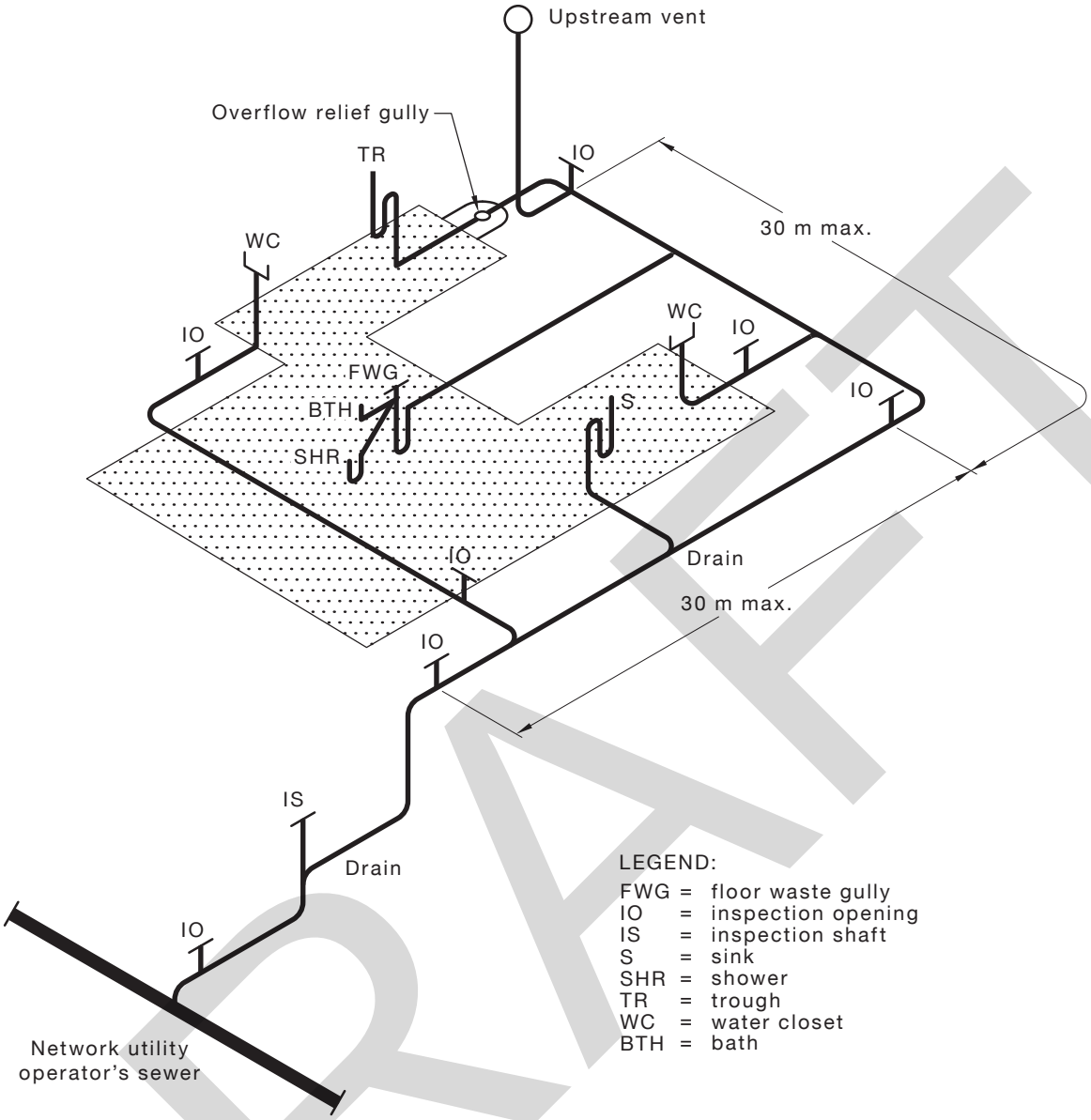

FIGURE 4.7.1 TYPICAL PROVISION OF INSPECTION OPENINGS

4.7.2 Size

The size of inspection openings in drains shall be—

(a) the same size as the drain for openings up to DN 150; or

(b) not less than DN 150 for openings larger than DN 150.

4.7.3 Types

Inspection openings may be of the following forms:

(a) Inspection branches or square junctions.

(b) Inspection chambers in accordance with Clause 4.8.

(c) Reflux valves.

4.7.4 Access to inspection openings

The following applies to inspection openings access:

(a) At least one inspection opening shall be raised to finished surface level on each main drain.

(b) Where raised to finished surface level, inspection openings shall be provided with airtight removable caps and protected by a cover and surrounded in such a manner that no traffic or structural loads can be transmitted to the drain.

4.7.5 Sealing

Inspection openings and unused sockets shall be sealed with plugs or caps fitted with a gasket or sealing ring and securely held in position by a clip or strap, or threaded connection.

When a plug or cap with a rubber ring or gasket is removed, a new rubber ring or gasket shall be fitted.

4.8 INSPECTION CHAMBERS

4.8.1 General

Inspection chambers shall be circular or rectangular in shape and either be—

(a) prefabricated; or

(b) constructed in situ from concrete at least 150 mm thick.

4.8.2 Size

The dimensions of inspection chambers shall conform with Table 4.8.2.

TABLE 4.8.2

SIZE OF INSPECTION CHAMBERS

Depth of floor of chamber		Rectangular		Circular
		Width	Length	Diameter
Minimum internal measurements in Australia, mm				
	<600	450	600	600
600	≤900	600	900	900
>900		750	1200	1050
Minimum internal measurements in New Zealand, mm				
100		<1000		450
>100		<1000		600
All sizes		>1000		1000

4.8.3 Construction

4.8.3.1 *Conduits and channels*

Conduits and channels in inspection chambers shall be constructed in accordance with the following:

(a) The conduit in any inspection chamber located inside a building shall be fully enclosed and incorporate an inspection opening or the inspection chamber shall be provided with an airtight cover.

(b) The conduit in any external inspection chamber may be either—

(i) enclosed, as specified in Item (a); or

(ii) an open channel of width and depth equal to the diameter of the drain.

(c) The floor in any inspection chamber shall slope towards the channel, or towards the inspection opening, on a grade of approximately 8%.

(d) Formed junctions and bends in channels shall have a centre-line radius of not less than 300 mm.

(e) A fall of at least 30 mm shall be provided in the invert of every channel that curves through 45° or more.

4.8.3.2 *Jump-ups*

Jump-ups at inspection chambers shall be as follows:

(a) Where installed in an inspection chamber, the jump-up shall be clipped to the wall and terminate at each end with a 90° bend, the higher one of which shall incorporate an inspection opening or may be a junction.

(b) Where more than one jump-up is installed in any circular inspection chamber, the chamber shall be at least 1.2 m in diameter.

NOTE: Typical jump-ups at inspection chambers are shown in Figure 4.8.3.2.

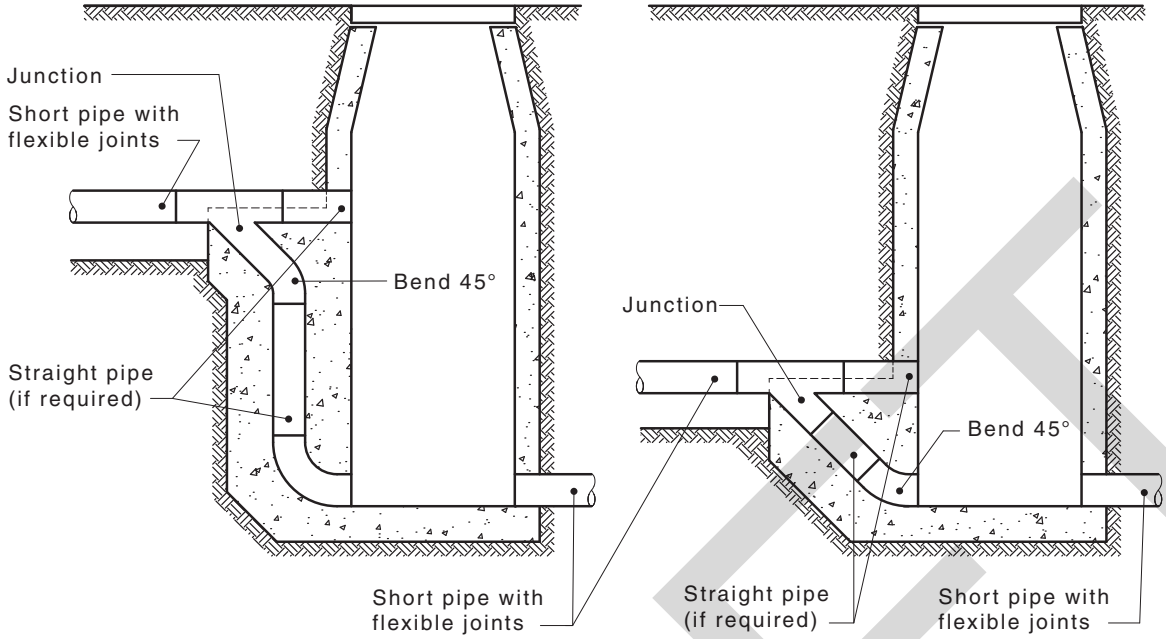

(a) Jump-up outside the chamber

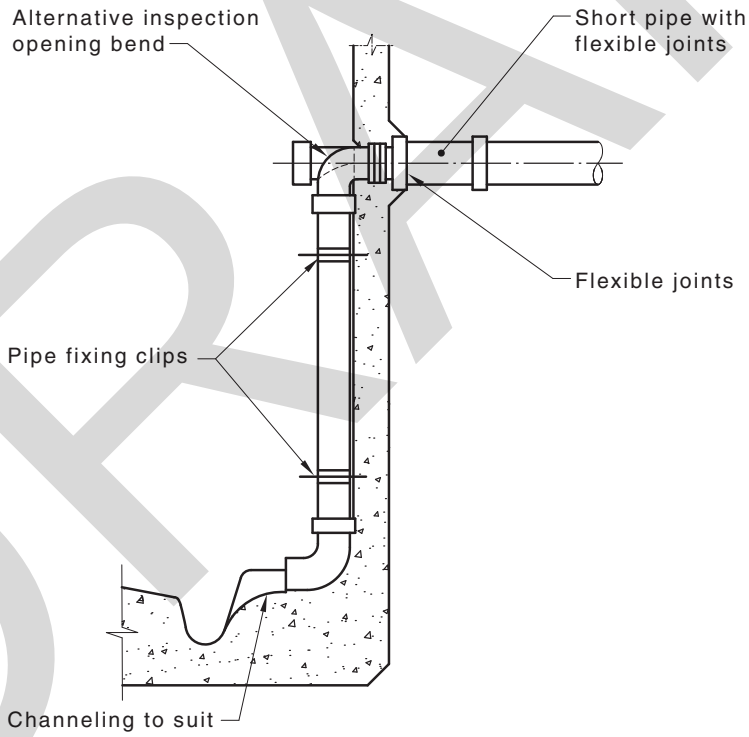

(b) Jump-up inside the chamber

FIGURE 4.8.3.2 TYPICAL JUMP-UPS AT INSPECTION CHAMBERS

4.8.3.3 *Ladders*

Where the depth of an inspection chamber, well or sump exceeds 1.2 m, rung-type and individual-rung ladders conforming with AS 1657 and AS/NZS 4680 shall be installed, provided—

(a) the individual-rung ladders are limited to inspection chambers with a maximum depth of 3.0 m and to structures without prefabricated walls; and

(b) following manufacture, steel ladders are hot-dip zinc galvanized as specified in AS/NZS 4680.

4.8.3.4 *Cement rendering*

The floor and cast in situ channels of all inspection chambers shall be rendered with a coat of cement mortar at least 10 mm thick and trowelled to a smooth finish.

4.8.3.5 *Top section*

Inspection chambers may be constructed either full size to surface level or, at a height of not less than 1.5 m above the floor, may be tapered to an access opening, provided the access shaft is at least 600 mm in diameter and does not exceed 350 mm in length.

4.8.3.6 *Access opening*

A circular or rectangular access opening or access chamber at least 500 mm in size and fitted with a removable watertight cover shall be provided at surface level.

Where subject to vehicular traffic, the cover shall be adequate for the applied loading.

4.8.3.7 *Construction joints*

Where required, construction joints shall be provided in accordance with the following:

(a) Not more than 24 h shall elapse between successive pours of concrete.

(b) The keying surface shall be scabbled and cleaned.

(c) A cement slurry or bonding agent shall be applied immediately prior to pouring concrete.

4.8.3.8 *Inserts*

Holes broken into, or formed in, walls of inspection chambers for insertion of pipes or fittings shall be made watertight by—

(a) keying and preparing as for construction joints, caulking the annular space between the concrete and pipe or fitting with a stiff 2:1 mix of sand-to-cement mortar; or

(b) sealing with an epoxy-based or other type of sealant.

4.8.4 Differential settlement

Where differential settlement may occur and a drain passes through the wall of an inspection chamber over 1 m deep, two flexible joints shall be provided on the drain adjacent to the wall. The length of drain between the two flexible joints shall not exceed 600 mm (see Figure 4.8.3.2).

4.8.5 Differential movement

Where a drain passes through the wall of an inspection chamber, septic tanks, pre-treatment devices, wet wells or similar structures, two flexible joints shall be installed with a spacing between the joints not exceeding 2.5 times the pipe diameter (see Figure 4.8.5).

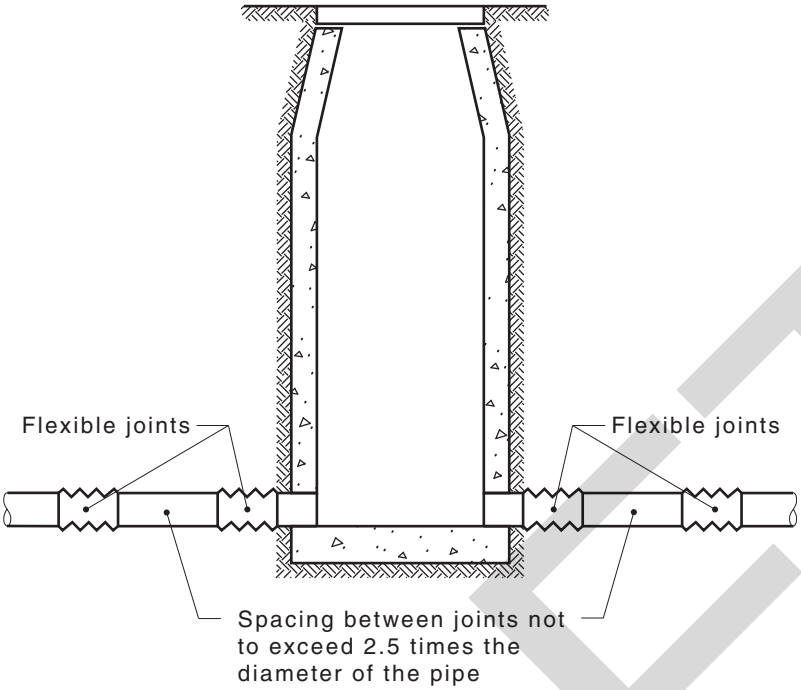

FIGURE 4.8.5 TYPICAL INSTALLATION OF FLEXIBLE JOINTS INSTALLED IN INSPECTION CHAMBERS OR SIMILAR STRUCTURES

4.9 JUNCTIONS IN DRAINS

4.9.1 Drains installed at grade

The connection of any drain to a graded drain shall be by means of a junction with an upstream angle not greater than 45° and shall comply with the following:

(a) Double 45° junctions shall not be used.

(b) Where a junction is used to make the connection of a branch drain to a main drain of the same size, the entry level of the branch drain may be on grade.

(c) Where unequal junctions are used, the invert of the branch drain shall be at least 10 mm higher than the soffit of the drain to which it connects.

NOTES:

1 For a typical arrangement of drains joined at grade, see Figure 4.9.1.

2 For junctions installed in drains for Class H1, H2 and E sites, see Clause 3.2.

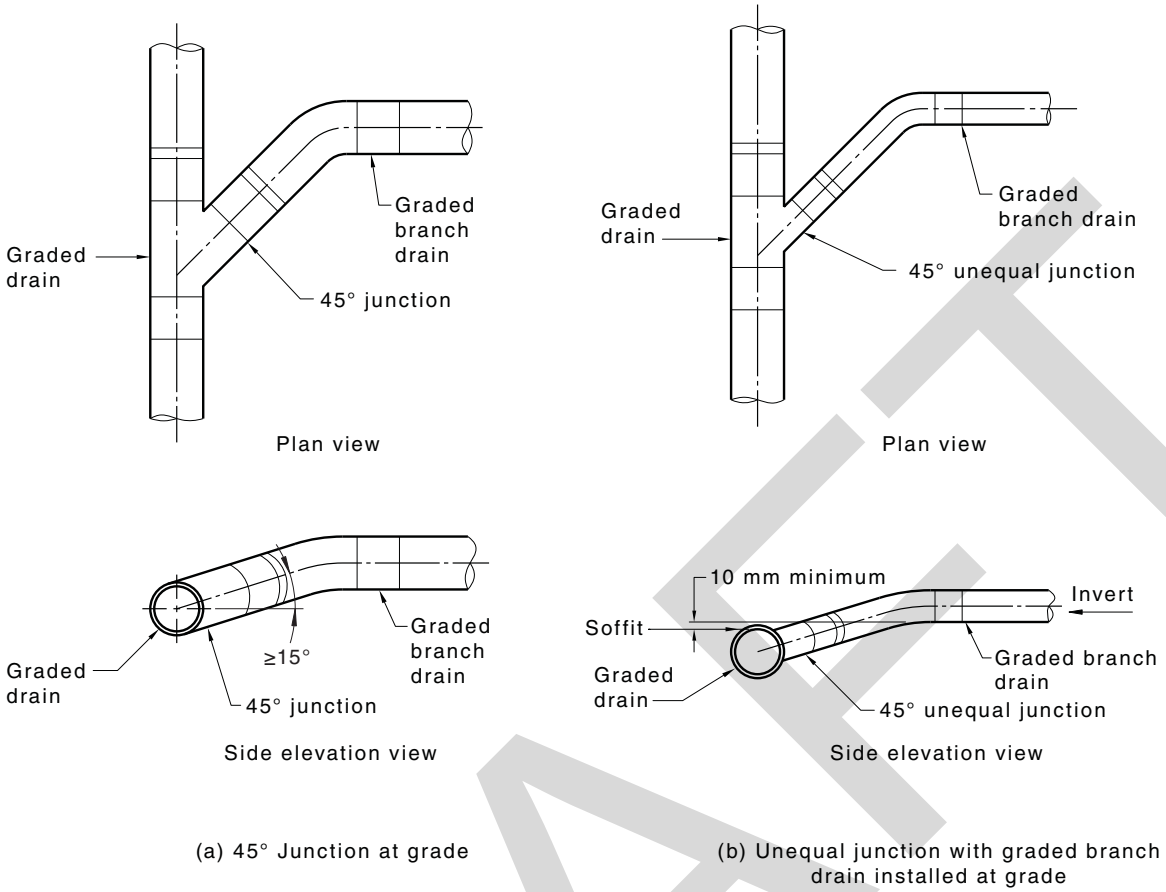

FIGURE 4.9.1 TYPICAL ARRANGEMENT FOR GRADED BRANCH DRAINS ENTERING MAIN DRAIN

4.9.2 Junctions installed in vertical plane

Junctions installed in a vertical plane shall not be used for connection of stacks. Junctions installed in the vertical plane for the connection of a single discharge pipe or a drain, shall have an upstream angle not greater than 45°, provided the following criteria are met, where applicable:

(a) The vertical riser does not exceed 2 m in height, above the invert of the graded drain.

(b) Where the length of the branch drain connected to the vertical riser exceeds 500 mm, the branch drain is independently supported.

(c) Where a vertical riser is to be extended to finished surface level and/or the distance between the invert of the main drain and the invert of the branch drain exceeds 1 m, the junction is supported in accordance with Clause 5.3.

4.9.3 Square junctions

Square junctions in drains shall be used only—

(a) at the top of a jump-up at the point of connection;

(b) at the connection of an inspection shaft to a graded drain;

(c) at the connection of a drain to a boundary trap riser;

(d) where a vent is connected to a boundary trap riser;

(e) as the inlet riser of a gully or floor waste gully;

(f) as an inspection opening; and

(g) at the top of a jump-up in a drain, in lieu of a bend and inspection opening.

4.9.4 Junctions for stacks connected to below-ground drainage

A 45° junction installed on grade and a bend at the base of the stack, as specified in Clause 6.7.3, shall be used for the connection of a stack to a below-ground drain.

4.10 JUMP-UPS

Jump-ups in drains shall be constructed in accordance with the following:

(a) The bend at the base of the vertical section of drain shall be supported in accordance with Clause 5.3.

(b) A bend, 45° junction, square junction or a sweep junction shall be used at the top of the vertical section of drain.

NOTE: A typical example is shown in Figure 4.10.

(c) The vertical section shall be protected and supported during the installation and placement of backfilling.

Branch drains connected to jump-ups shall be independently supported where the unsupported length exceeds 500 mm.

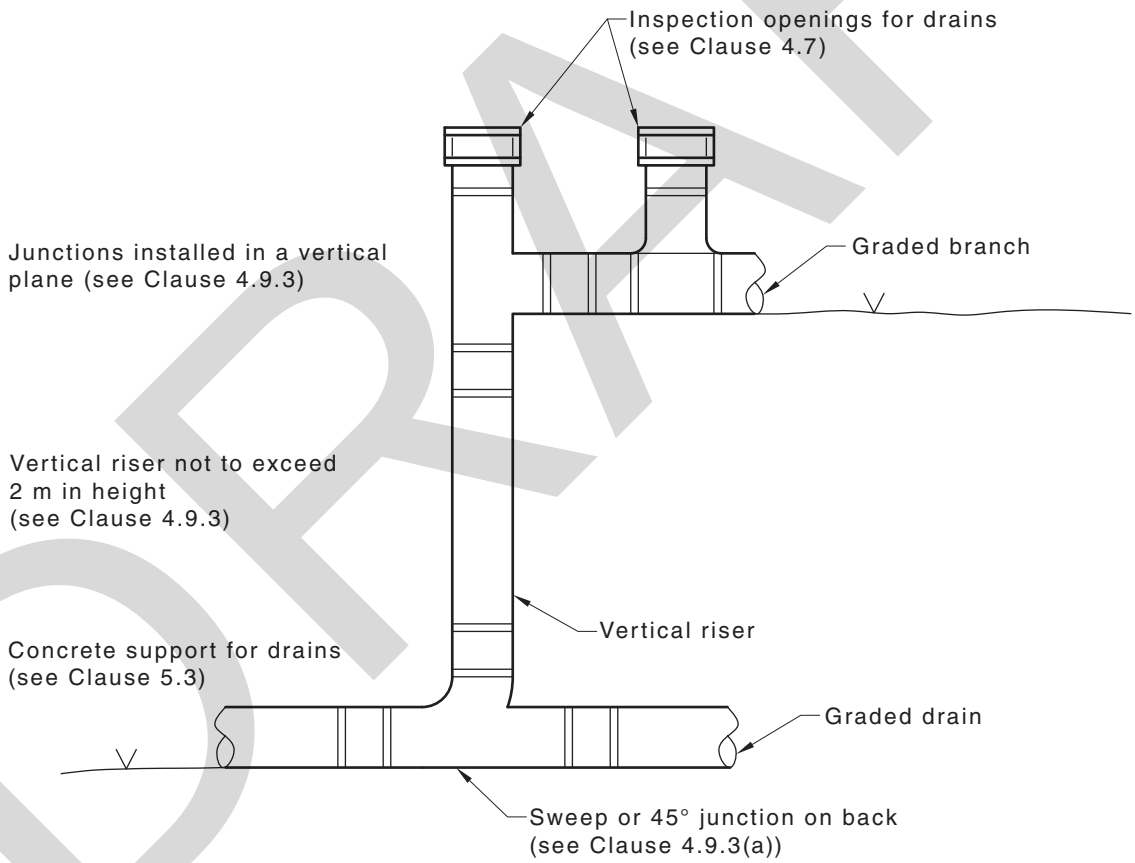

FIGURE 4.10 TYPICAL VERTICAL JUMP-UP FROM MAIN DRAIN TO GRADED BRANCHES

4.11 DISCONNECTION AND SEALING

4.11.1 Disconnection from the sewer

Disused drains shall be disconnected in accordance with the following:

(a) Disconnection shall be made at the point of connection to the network utility operator's sewer.

(b) Extraneous water, soil, sand, rock or other substances shall not enter the sewer.

(c) Where the point of connection is in water-charged ground, dewatering shall be carried out in accordance with Clause 5.2.3.

4.11.2 Sealing

Disused drains shall be disconnected as near as practicable to the drains remaining in service, which shall be made watertight using a cap or plug and sealed in a manner appropriate for the material remaining in use.

SECTION 5 EXCAVATION BEDDING SUPPORT AND BACKFILLING

5.1 SCOPE OF SECTION

This Section specifies requirements for excavation, bedding, support and backfilling of drains. It covers pipes up to DN 225 (see also Clause 3.8).

NOTES:

1 Excavation should be conducted in accordance with workplace health and safety legislation.

2 Where the bottom of the trench is adjacent to or below the footing and walls of any adjoining building or structure, see also Clause 3.8.2.

5.2 EXCAVATION OF TRENCHES

5.2.1 Trench dimensions

Trenches shall be made with a minimum clearance of 100 mm on each side of the drain barrel, measured to the inside of the sheeting or side of trench.

5.2.2 Over-excavation

Where a trench has been excavated deeper than necessary, the excess depth shall be filled either with bedding material compacted to achieve a density as near to the original soil density as possible, or with concrete.

5.2.3 Water-charged ground

Excavation in water-charged ground shall be in accordance with the following:

(a) The water level shall be lowered below the base of the proposed trench and maintained at that level during excavation, laying of the drain and backfilling of the trench.

(b) Dewatering shall be carried out in accordance with the following:

(i) The removed water shall be discharged into a location where it will not cause a nuisance or damage to property or the environment.

(ii) The removed water shall not discharge, either directly or indirectly, into the sewer.

NOTE: Pumps and spearheads or similar devices may be used.

5.3 CONCRETE SUPPORT FOR DRAINS

Concrete pads used to support drains shall be a minimum of 100 mm thick and shall be laid—

(a) under gully traps and boundary traps of material other than cast iron;

(b) under all inspection junctions where a riser is brought to the surface;

(c) under all bends greater than DN 65 forming risers from the main drain;

(d) not closer than 20 mm to flexible joints;

(e) for square junctions, beneath the junction to a minimum thickness of 100 mm and continued up vertically to the centre of the junction fitting; and

(f) for 45° junctions, beneath the junction to a minimum thickness of 100 mm and continued up vertically to the underside of the bend fitted to the junction fitting.

5.4 BEDDING OF DRAINS

5.4.1 General

The bed onto which drains are laid shall continuously support the installed drain accommodating the loads from the pipeline and surrounding ground. Bedding of drains shall conform with the following:

(a) In stable soil, drains shall be laid on a bedding material conforming with Clause 5.4.2, or shall be directly supported on the undisturbed base of the trench, provided the base of the trench is free from any rocks or tree roots.

(b) In clay, rock, shale, gravel or ground containing hard objects, drains shall be supported on a bedding material placed in the base of the trench.

(c) Groundwater or surface water entering the trench shall not disturb the bedding materials.

5.4.2 Bedding materials

Filling materials used for bedding of drains shall be one of the following:

(a) Crushed rock, gravel screenings or similar recycled materials of nominal size of 7–10 mm.

(b) Cement mortar containing 1 part of Portland cement to 4 parts of sand by volume, thoroughly mixed with clean water to a workable consistency.

(c) Cement mortar bedding where the base of the trench is rock or shale. Where the grade is greater than 20% (1 in 5), the cement mortar shall be—

  (i) of a minimum depth of 50 mm, measured below the barrel of the pipe;

  (ii) not less than 75 mm wide;

  (iii) not closer than 20 mm to flexible joints; and

  (iv) have pipes supported at not greater than 1500 mm from the centres, prior to placing the mortar bedding.

(d) Free-running sand capable of passing through a 2 mm mesh sieve, which does not contain clay, organic or any other deleterious materials.

NOTES:

1 Cast iron and ductile iron pipes may be unsupported for up to 600 mm either side of each pipe joint.

2 For installation of PVC-U pipe systems, refer to AS/NZS 2032.

3 For installation of polyethylene pipe systems, refer to AS/NZS 2033.

5.4.3 Pipe side support and overlay materials

Pipe side support and pipe overlay material shall not be inferior to the pipe bedding material.

5.4.4 Bedding and backfill

The sanitary drainage services shall be surrounded with not less than 75 mm of compacted sand, or fine-grained soil, with no hard-edged object to come in contact with or rest against any pipe or fitting.

NOTE: For typical example, see Figure 5.4.4

Backfill shall be free from builder's waste, bricks, concrete pieces, rocks or hard matter larger than 25 mm and no soil lumps larger than 75 mm.

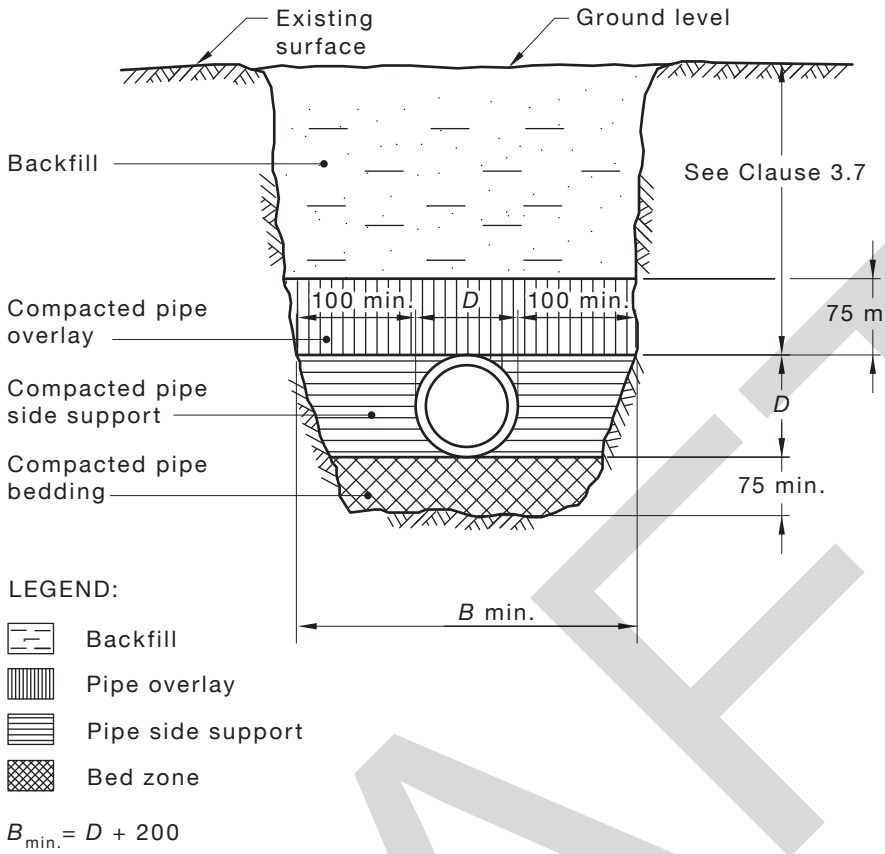

DIMENSIONS IN MILLIMETRES

FIGURE 5.4.4 TYPICAL BEDDING OF DRAINS

5.4.5 Minimum cover

The minimum cover requirements for drain shall be in accordance with Clause 3.7.

5.5 INSTALLATION OF BACKFILL MATERIALS

5.5.1 General

Backfill materials shall be compacted to restore the trench as near as practicable to the normal surrounding ground surface level and reduce the likelihood of subsidence.

NOTE: For minimum cover, see Clause 3.7.

5.5.2 Excavated material

Excavated material from the trench may be suitable for final backfill, provided it is free from rock, hard matter and organic material, and broken up so that it contains no soil lumps larger than 75 mm, which would prevent adequate compaction.

5.6 PLUMBING AND DRAINAGE IN REACTIVE SOILS

5.6.1 General

This Clause specifies the installation of plumbing and drainage in M, H1, H2, and E site classifications. This base of trenches shall be sloped away from the building in accordance with Clause 3.2.2(a). Where pipes pass under footing systems, there shall be a barrier to prevent the ingress of water in accordance with Clause 3.2.2(b)(ii).

NOTES:

1 Site classifications are defined in AS 2870.

2 Clause 3.8.2 provides special design considerations for drains in close proximity to footings.

3 For proclaimed mine subsidence or landslip districts, the appropriate authority should be referred to for advice on subsidence or landslip design parameters for proposed drainage systems.

4 In New Zealand, refer to NZBC Clause G13/AS2 and NSZ 4404 Land Development and subdivision infrastructure (wastewater) for seismic design of pipes in seismically active areas.

5.6.2 Vertical risers

For sites classified as H1, H2, and E external branches with vertical risers connected to a junction shall be provided with flexible joints where—

(a) the downstream side of the bend or junction forming the branch drain is connected to the main drain; and

(b) immediately either side of the junction forming part of the main drain; or

(c) immediately downstream of the bend on the main drain.

NOTE: For a typical connection of flexible joints connected to vertical risers, see Figure 5.6.2.

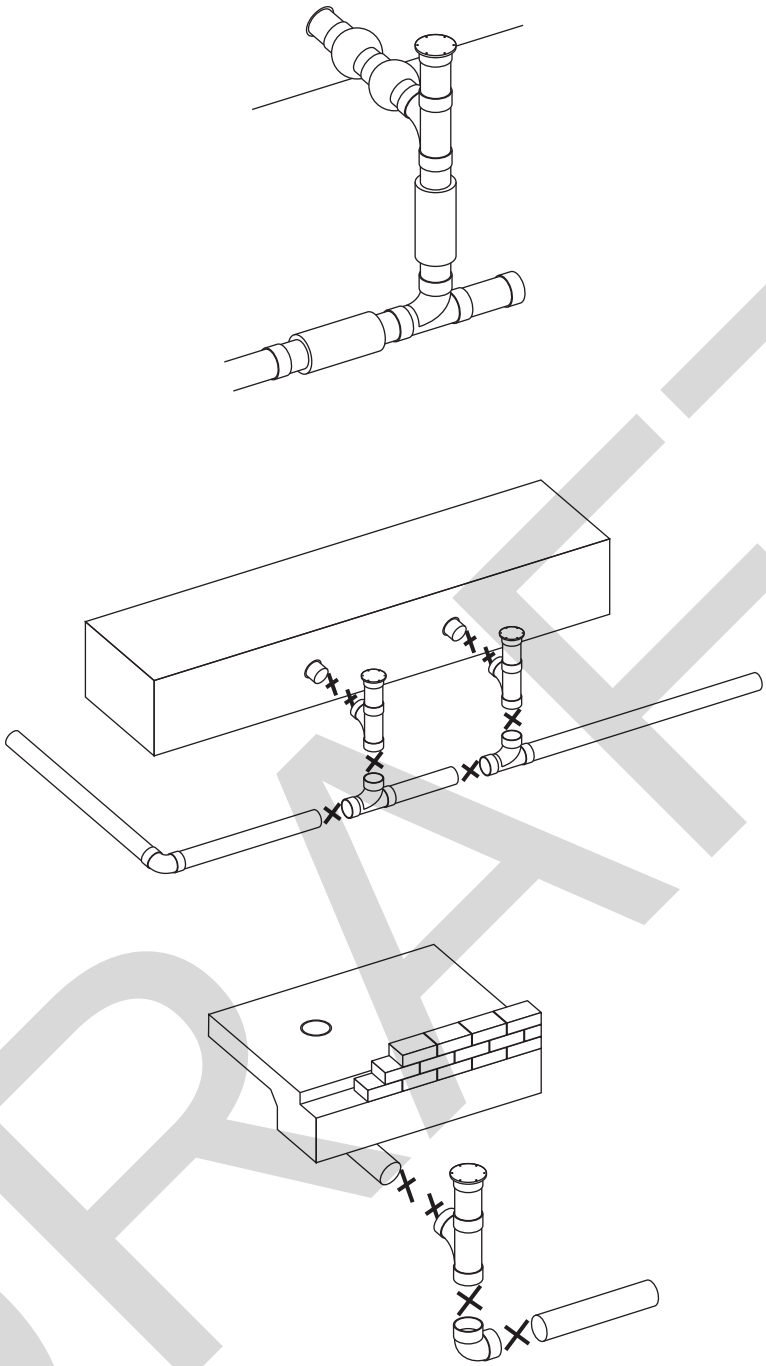

FIGURE 5.6.2 TYPICAL VERTICAL RISERS

5.6.3 Graded risers

For sites classified as H1, H2, and E external branches with graded risers connected to a junction shall be provided with flexible joints where:

(a) the downstream side of the first bend outside the footing on the branch drain and immediately upstream from the inlet to the junction forms part of the main drain; and

(b) immediately either side of the junction forming part of the main drain; or

(c) immediately downstream of the bend on the main drain.

NOTE: Figure 5.6.3 shows a typical connection of flexible joints connected to graded risers.

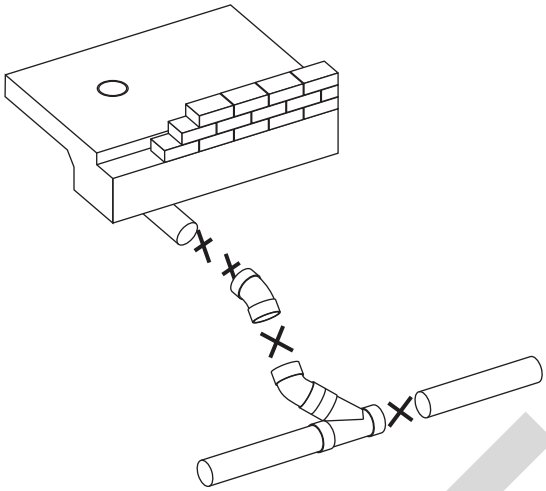

FIGURE 5.6.3 TYPICAL EXAMPLE OF GRADED RISERS

SECTION 6 GENERAL DESIGN REQUIREMENTS FOR SANITARY PLUMBING SYSTEMS

6.1 SCOPE OF SECTION

This Section specifies requirements for all types of sanitary plumbing systems.

NOTES:

1 The number of floor levels is specified in Clause 9.2.5.

2 Vacuum drainage systems are covered in Section 16.

6.2 FIXTURE UNIT RATINGS

Fixture unit ratings for all fixtures are given in Table 6.2(A). These ratings shall be used for the sizing of drains, stacks and graded discharge pipes.

TABLE 6.2(A)

FIXTURE UNIT RATINGS

Fixture	Fixture abbreviations	Min. size of trap outlet and fixture discharge pipe DN		Fixture unit rating
			NZ (only)	
Autopsy table	AT	50		3
Bain-marie	BM	40		1
Basin	B	40	32	1
Bath (with or without shower) (Note 1)	Bath	40		4
Bath (foot)	Bath (foot)	40		3
Bath (baby)	Bath (baby)	40		3
Bath (shower)	Bath (shr)	40		4
Bedpan sterilizer	BPS	50		4
Bedpan washer	BPW	80		6 (F. valve) 4 (Cist.)
Bedpan washer	BPW	100		6 (F. valve) 4 (Cist.)
Bedpan washer/sterilizer	BPWS	80		6 (F. valve) 4 (Cist.)
Bedpan washer/sterilizer	BPWS	100		6 (F. valve) 4 (Cist.)
Bidet, bidette	Bid	40	32	1
Circular wash fountain	CWF	50		4

(*continued*)

TABLE 6.2(A) (*continued*)

Fixture	Fixture abbreviations	Min. size of trap outlet and fixture discharge pipe DN		Fixture unit rating
			NZ (only)	
Clothes-washing machine— domestic commercial	CWM	 40 50		 5 See Table 6.2(B)
Dental unit	DU	40		1
Dishwashing machine— domestic commercial	DWM	 40 50		 3 See Table 6.2(B)
Drinking fountain	DF	40	25	1
Floor waste gully— without fixture with fixture	FWG	50		 0 as per fixture rating
Glass-washing machine	GWM	40		3
Potato peeler	PP	50		3
Sanitary napkin disposal unit	SNDU	40		3
Shower— single multiple	Shr	 40 50		 2 2 per shower head
Sink— single (with or without disposal unit) (Note 4) double (with or without disposal unit) tea bar, domestic bar, commercial	 S S T BS(D) BS(C)	 50 50 50 40 50	 40 40 40	 3 3 1 1 3
Sink cleaner	CS	50	40	1
Sink laboratory (Note 4)	LS	50		1
Sink (pot or utility)	PS	50		5
Slop hopper	SH	100		6 (F. valve) 4 (Cist.)
Trough— ablution laundry (single or double)	 Tr.(A) Tr.(L)	 40 40		 3 5
Urinal— wall-hung (including waterless) stall, or each 600 mm length of slab	 Ur	 40 50	 32	 1 1
Water closet pan	WC	80		6 (F. valve) 4 (Cist.)
Water closet pan	WC	100		6 (F. valve) 4 (Cist.)
Bathroom group in a single room (basin, bath, shower, water closet)				6

(*continued*)

TABLE 6.2(A) (*continued*)

Fixture	Fixture abbreviations	Min. size of trap outlet and fixture discharge pipe DN		Fixture unit rating
			NZ (only)	
Combination pan room sink and flushing bowl	PRS	80		6 (F. valve) 4 (Cist.)
Combination pan room sink	PRS	100		6 (F. valve) 4 (Cist.)

NOTES:

1 The maximum discharge from any fixture into the single-stack and single-stack modified system is 500 L. If the discharge is in excess of 500 L, the fixture unit loading may be determined in accordance with Table 6.2(B).

2 Where a dishwashing machine is connected to a sink trap, only the sink fixture unit rating is considered. Where a clothes-washing machine is connected to a trough trap, only the trough fixture unit rating is considered.

3 Where waste fixtures are connected to a floor waste gully, the fixture unit rating of the floor waste gully is the sum of the fixture unit ratings of the fixtures connected.

4 To meet the requirements of AS 1428 (series), accessible design sinks on height adjustable working surfaces in kitchens and laboratories may have DN 40 fixture discharge pipes.

TABLE 6.2(B)

FIXTURE UNIT RATINGS FOR CONTINUOUS FLOWS

Flow, L/s	0.5	1.0	1.5	2.0	2.5	3.0	3.5	4.0
Fixture unit equivalent rating	6	8	15	25	40	60	85	115

6.3 VENTING FOR FIXTURES

Except for fixtures discharging to disconnector gullies (in which case Table 4.6.3 applies) and where the length of the fixture discharge pipe exceeds the length shown in Appendix B, a trap vent or air admittance valve shall be provided.

6.4 TRAPPING OF FIXTURES AND APPLIANCES

6.4.1 General

Each sanitary fixture and appliance shall have a trap or self-sealing device. The trap or self-sealing device shall be in the same room as the fixture and/or appliance that it serves and be accessible.

6.4.2 Water seal

Under normal operating conditions, fixture traps shall retain a water seal of not less than 25 mm.

Traps that are installed in a pressurized chamber shall retain a water seal of not less than 70 mm when the maximum pressure within the chamber is applied.

6.4.3 Location of traps and self-sealing devices

Traps and self-sealing devices shall be connected as close as practicable to the outlet of the fixture or appliance being served. The maximum distance from the outlet of a fixture to the surface of the water seal of a trap shall be 600 mm for other fixtures other than floor waste gullies and fixture pairs.

NOTES:

1 For floor waste gullies, see Clause 4.6.7.7.

2 For fixture pairs, see Clause 6.4.4.2.

6.4.4 Multiple outlets

6.4.4.1 *General*

The following fixtures, or a combination thereof, may be connected in pairs to a single fixture trap, provided the fixtures have similar spill levels:

(a) Basins.

(b) Sinks (other than pot, laboratory or utility sinks).

(c) Showers.

(d) Laundry troughs.

(e) Ablution troughs.

6.4.4.2 *Distance between outlets*

Pairs of fixtures shall be connected so that the distance between their outlets does not exceed 1.2 m.

NOTE: A typical connection of a fixture pair is shown in Figure 6.4.4.2.

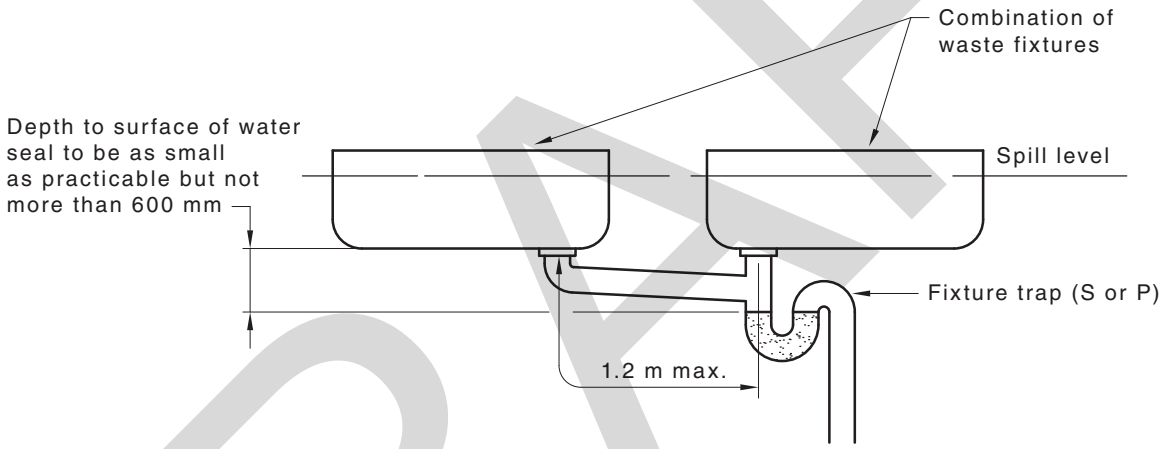

FIGURE 6.4.4.2 TYPICAL CONNECTION OF A FIXTURE PAIR

6.5 GRADED DISCHARGE PIPES

6.5.1 Minimum grades

The minimum grades of discharge pipes shall conform with Table 6.5.1.

TABLE 6.5.1

MINIMUM GRADES OF DISCHARGE PIPES

Size of graded section of pipe DN	Minimum grade %
40	2.50
50	2.50
65	2.50
80	1.65
100	1.65
125	1.25
150	1.00
225	0.65
300	0.40

NOTE: Appendix D provides a table for conversion of

grades as a percentage to grades as a ratio.

6.5.2 Connection methods

6.5.2.1 *General*

Connection of graded pipes to each other or connection of fixture discharge pipes to graded pipes shall conform with the following:

(a) Graded discharge pipes of different sizes shall be connected so that the soffits of both pipes are in common alignment.

(b) The invert level of a trap or floor waste gully weir shall be a minimum of 10 mm higher than the soffit of the graded discharge pipe to which it connects.

NOTE: A typical connection is depicted in Figure 6.5.2.1.

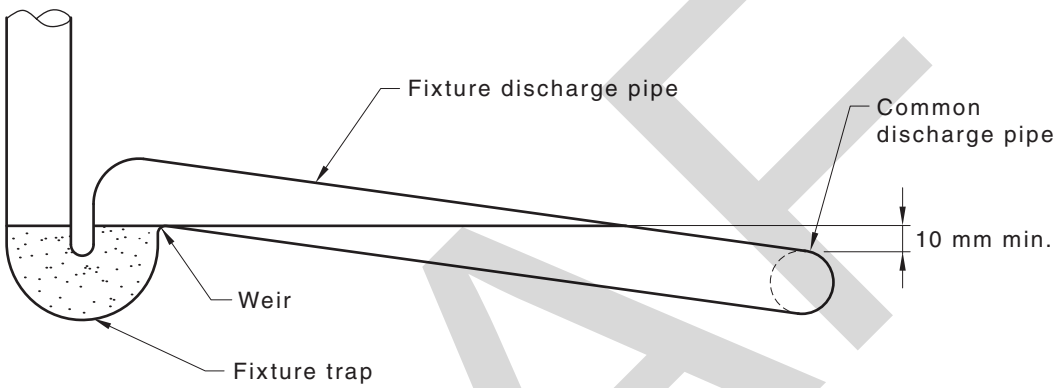

FIGURE 6.5.2.1 TYPICAL CONNECTION OF FIXTURE DISCHARGE PIPE TO A COMMON DISCHARGE PIPE

6.5.2.2 *Opposed discharges*

Opposed discharge pipes shall be connected to conform with Clause 6.5.2.1(b), using—

(a) two separate junction fittings; or

(b) junction branches fabricated so that the opposed junction entries do not overlap.

6.5.2.3 *Junctions in graded pipes*

Junctions (whether equal or unequal) shall be 45°.

Double 45° junctions or double sweep junctions shall not be used to make connections on grade.

6.5.2.4 *Junctions installed at grade*

Discharge pipes shall be joined to each other by means of a 45° junction and shall comply with the following:

(a) Where a junction is used to make the connection of a branch drain to a main drain of the same size, the entry level of the branch drain may be on grade.

(b) Where unequal size junctions are used, the invert of the branch pipe shall be 10 mm higher than the soffit of the pipe to which it connects.

6.5.2.5 *Junctions installed in a vertical plane*

45° junctions shall be installed in the vertical plane for the connection of a single discharge pipe and common discharge pipe.

6.5.2.6 *Junctions for stacks connected to a graded pipe*

Junctions installed on grade for the connection of a stack to a graded pipe shall be in accordance with Clause 6.7.3.

6.6 JUNCTIONS IN STACKS

6.6.1 Types

The following types of junctions may be used to connect fixture, branch or common discharge pipes to a stack:

(a) 45° junctions.

(b) Sweep junctions.

(c) Aerator junctions.

(d) Ball junctions.

(e) Square junctions.

No fixture shall be connected to the branch or common discharge pipe within 500 mm in length from the stack if the entry is at grade.

6.6.2 Restrictions for square and ball junctions

Where any fixture trap is connected to a ball junction, the weir of the fixture trap shall be at the same height or above the top of the branch junction fitting.

Where a square or ball junction is used and any discharge pipe is less than 500 mm in length from the stack, one of the following shall apply:

(a) A self-sealing device shall be fitted to the fixture.

(b) An S-trap shall be fitted to the fixture and a vertical dropper provided in the discharge pipe between the fixture and the stack junction.

(c) A P-trap shall be fitted to the fixture, and the discharge pipe graded at not less than 6.65% (1 in 15).

6.6.3 Opposed connections

6.6.3.1 *At the same level*

Opposed connections at ball junctions or aerator junction fittings may be used only where the opposing pipes are connected to equal numbers of the same type of fixtures.

Opposed connections, other than at ball type junctions or aerator junction fittings, shall only be made using double 45° junctions or double sweep junctions.

6.6.3.2 *At different levels*

Graded fixture or common discharge pipes that are located at a lower level than any other opposed similar pipes shall not be connected to a stack within a restricted entry zone, as given in Table 6.6.3.2 and Figure 6.6.3.2, unless the lower pipe enters the stack at an angle of 45°.

TABLE 6.6.3.2

RESTRICTED ENTRY ZONE REQUIREMENTS

Discharge pipe size DN	Stack size DN	Restricted entry zone vertical depth mm
>40 ≤65	>40 ≤80	90
>40 ≤65	100	110

>40 ≤65	125	210
>40 ≤65	150	250
≥80	≥80	200

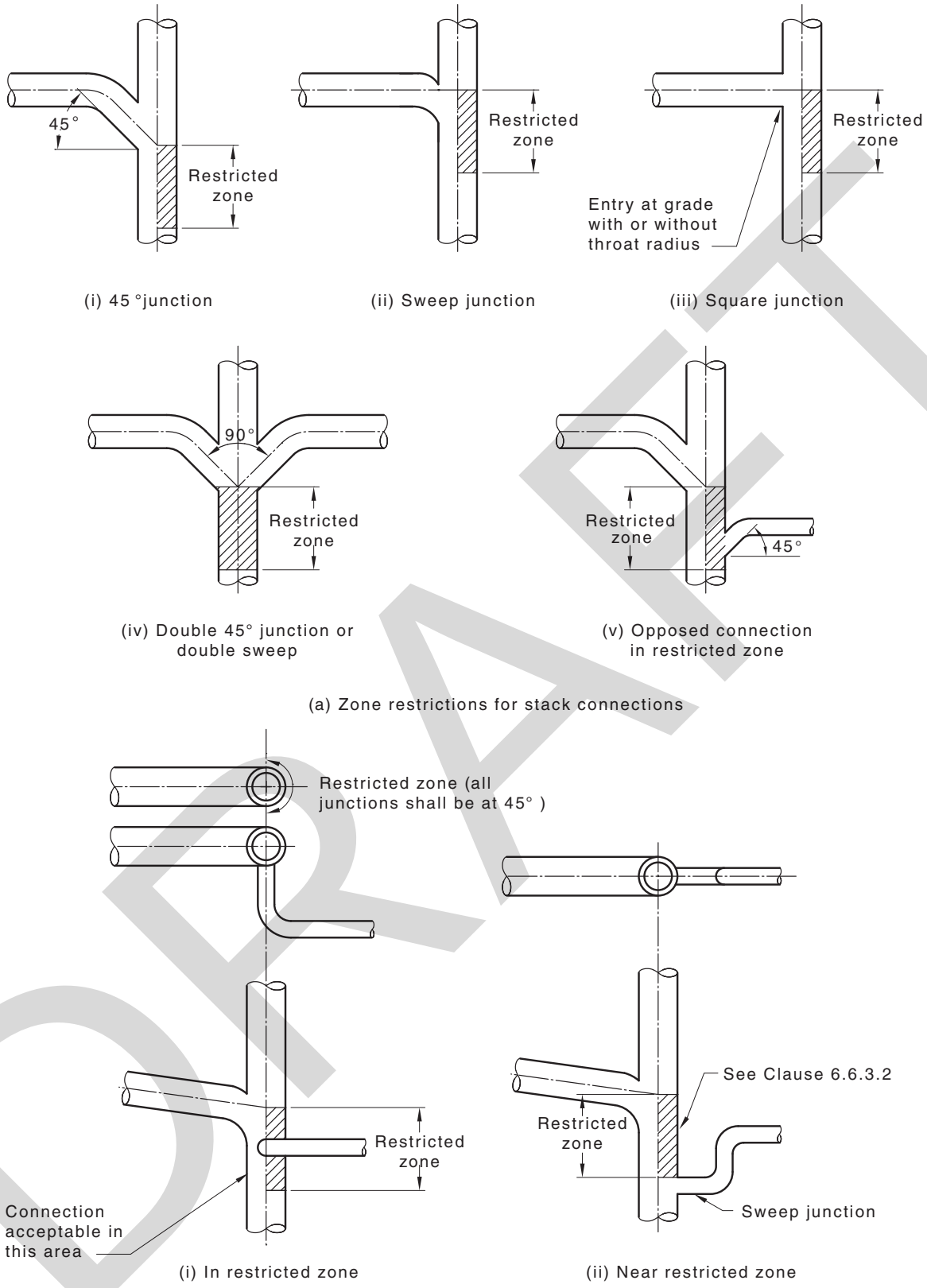

FIGURE 6.6.3.2 CONNECTIONS TO STACKS

6.7 CONNECTIONS NEAR BASE OF STACKS

6.7.1 Connections to drains or graded pipes

Discharge pipes shall connect to a drain or a graded pipe in accordance with Figure 6.7.1 and the following:

(a) For stacks of three floor levels or more—

(i) no connection shall be made closer than 2.5 m downstream or 1 m upstream of the base of the stack; and

(ii) no discharge pipe connecting a fixture upstream of a junction that connects a stack to a drain or graded pipe shall be closer than 1 m from the base of the stack.

(b) For stacks of two floor levels or less—

(i) no connection shall be made closer than 500 mm downstream or upstream of the base of the stack; and

(ii) no discharge pipe connecting a fixture upstream of a junction that connects a stack to a drain or graded pipe shall be within 500 mm of the base of the stack.

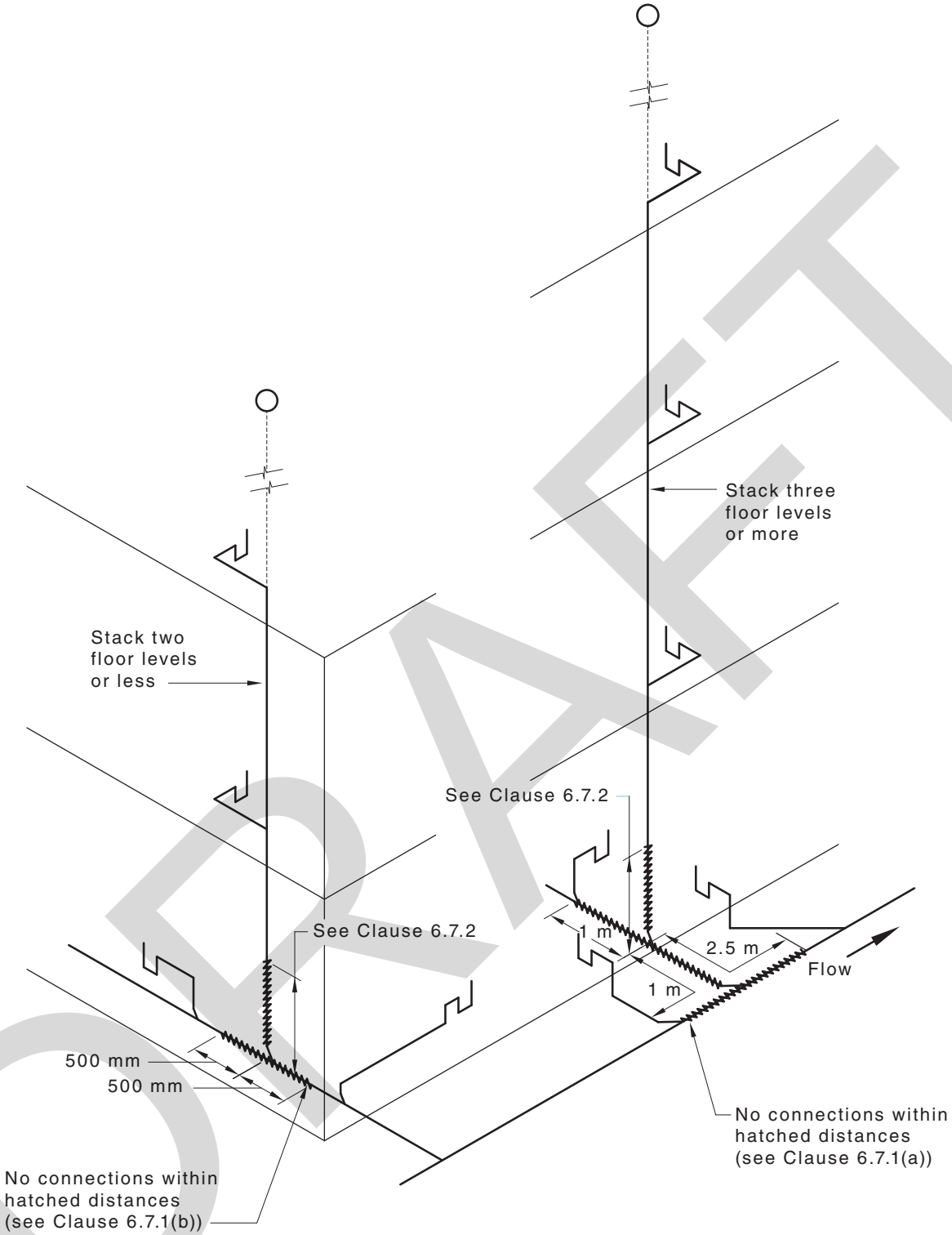

FIGURE 6.7.1 CONNECTIONS AT OR NEAR BASE OF STACK

6.7.2 Connections above base of stack

Branches shall not connect to a stack, as shown in Figure 6.7.1, within the following distances, measured vertically from the base of the stack to the invert of the branch:

(a) 600 mm for stacks that extend not more than five floor levels above the base of the stack.

(b) 1 m for stacks that extend more than five floor levels above the base of the stack.

(c) 2.5 m for all stacks in areas where foaming is likely to occur.

6.7.3 Connection of stacks to graded pipes or drains above ground

Connection of stacks to graded pipes or drains above the ground shall be made by—

(a) a 45° junction installed on grade and a bend at the base of the stack in accordance with Clause 6.7.4; or

(b) a 45° junction installed in the vertical plane with an extended branch so that the vertical projection of the stack, on the graded pipe or drain above the ground, is wholly outside the junction area, as shown in Figure 6.7.3.(b).

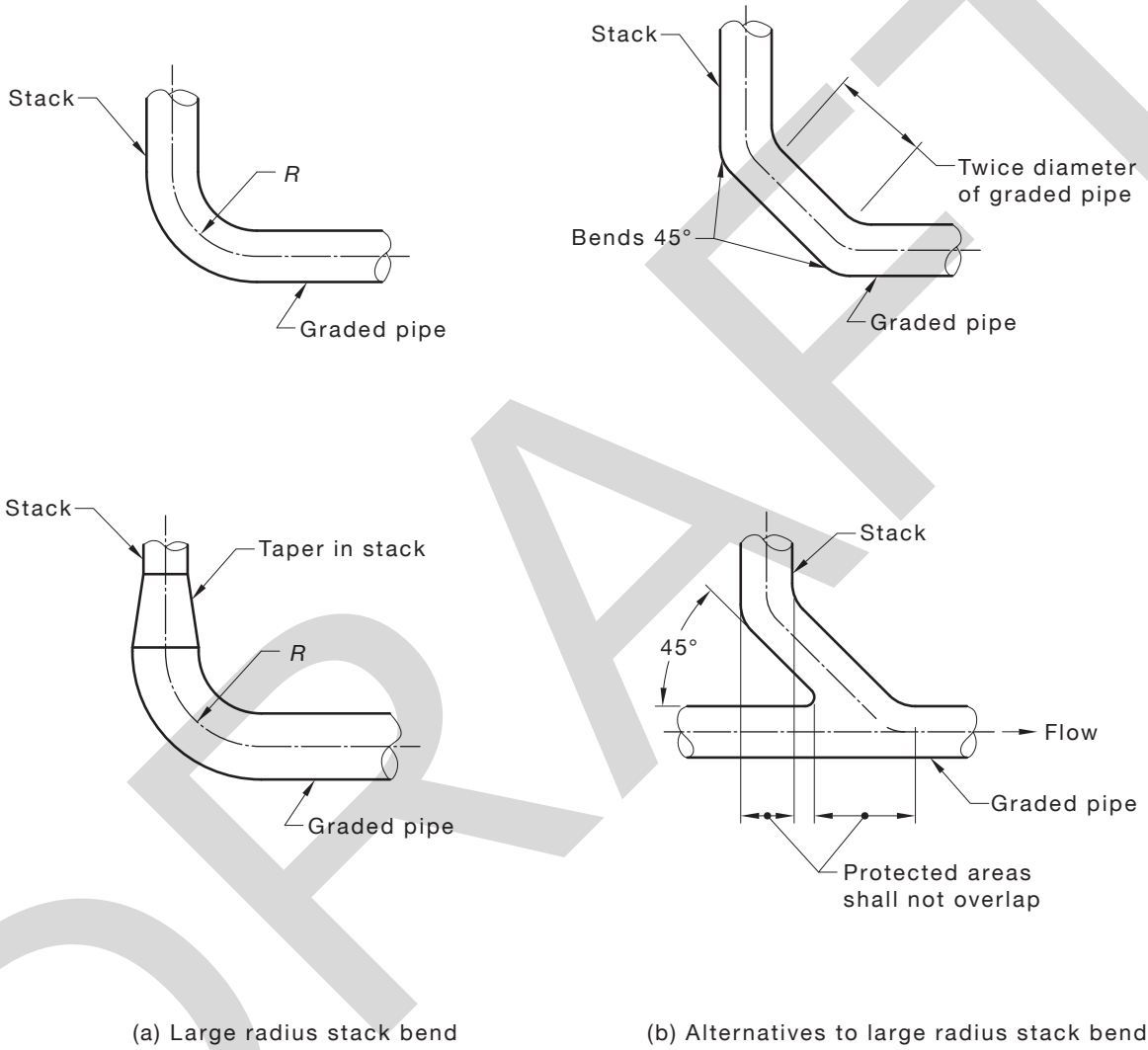

FIGURE 6.7.3 CONNECTION OF DISCHARGE STACKS TO GRADED DISCHARGE PIPES

6.7.4 Bends at the base of stacks

Bends at the base of stacks shall be not smaller in size than the graded pipe or drain to which they connect. They shall—

(a) have a centre-line radius not less than that stated in Table 6.7.4;

(b) consist of two 45° bends separated by a straight pipe of length not less than twice the bore of the pipe; or

(c) consist of an 88° bend where a stack extends through no more than two floor levels.

Where a stack is smaller than the graded pipe, a taper fitting shall be installed in the vertical stack, as shown in Figure 6.7.3.

TABLE 6.7.4

MINIMUM RADIUS FOR BENDS AT THE BASE OF STACKS

Pipe size DN	Radius (R) mm
≤100	225
>100	300

6.8 VENTS

6.8.1 General

This Clause (6.8) applies to the ventilation of the sanitary plumbing and sanitary drainage system using vent pipes.

NOTE: For venting with air admittance valves, see Clause 6.9.

6.8.2 Minimum grade

Vents shall be installed at a minimum grade of 1.25% (1 in 80) so that any condensation or other liquids that form in or enter the vent will drain to the sanitary plumbing and sanitary drainage system.

6.8.3 Interconnections

Vents shall only be interconnected above the flood level rim of the highest fixture or floor waste gully served by the vent.

The following vent pipes shall be vented to the open air outside the building independently and not be interconnected to any other system vent:

(a) Vent pipes connected to waste fixtures discharging into disconnector gullies.

(b) Chamber or steam relief vents from bedpan sanitizers and washers.

(c) Vent pipes from arrestor chambers.

(d) Vent pipes from gullies located within buildings.

6.8.4 Termination

Vents shall terminate as shown in Figure 6.8.4 in the open air outside the building and in a location not less than—

(a) 600 mm above any opening into any building that is within a horizontal distance of 3 m from the vent;

(b) 150 mm above its point of penetration through any roof covering;

(c) 3 m above any trafficable roof deck that is within a horizontal distance of 3 m from the vent;

(d) 2 m above or 600 mm below any chimney or similar opening within a horizontal distance of 3 m from the vent;

(e) 5 m in any direction from any air duct intake; or

(f) 600 mm above any eaves, coping or parapet that is within a horizontal distance of 600 mm from the vent.

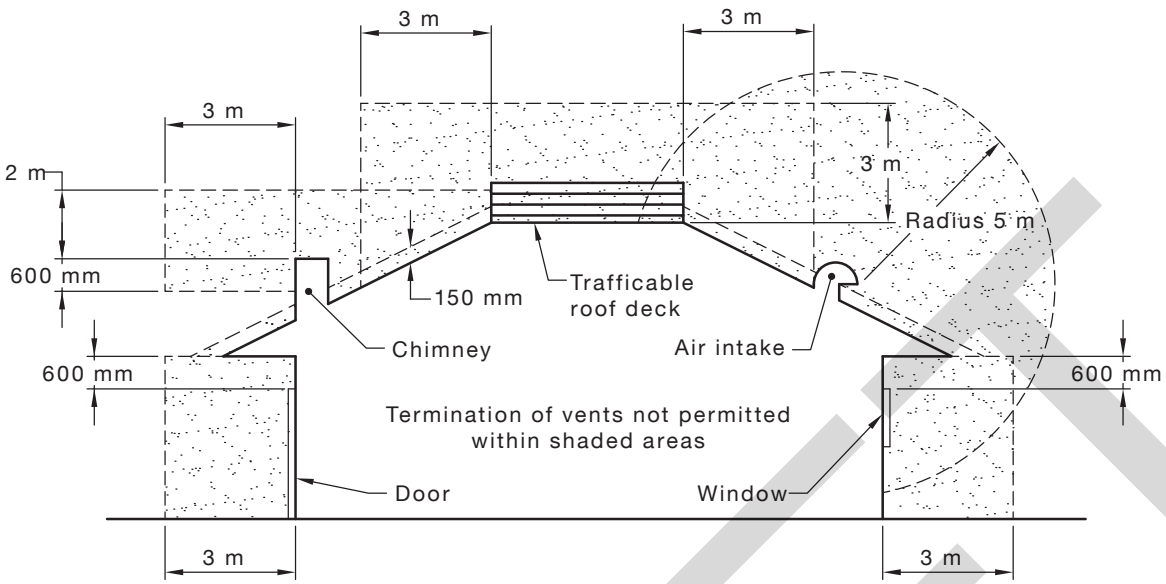

NOTE: Trafficable decks exclude access workways and work platforms.

FIGURE 6.8.4 TERMINATION OF VENTS

6.8.5 Connection to graded pipes

Where a vent is connected to a graded section of a discharge pipe, it shall be connected downstream of a fixture or trap and shall conform with Clause 8.5.1.1.

NOTE: For a typical connection of a vent to graded pipes, see Figure 6.8.5.

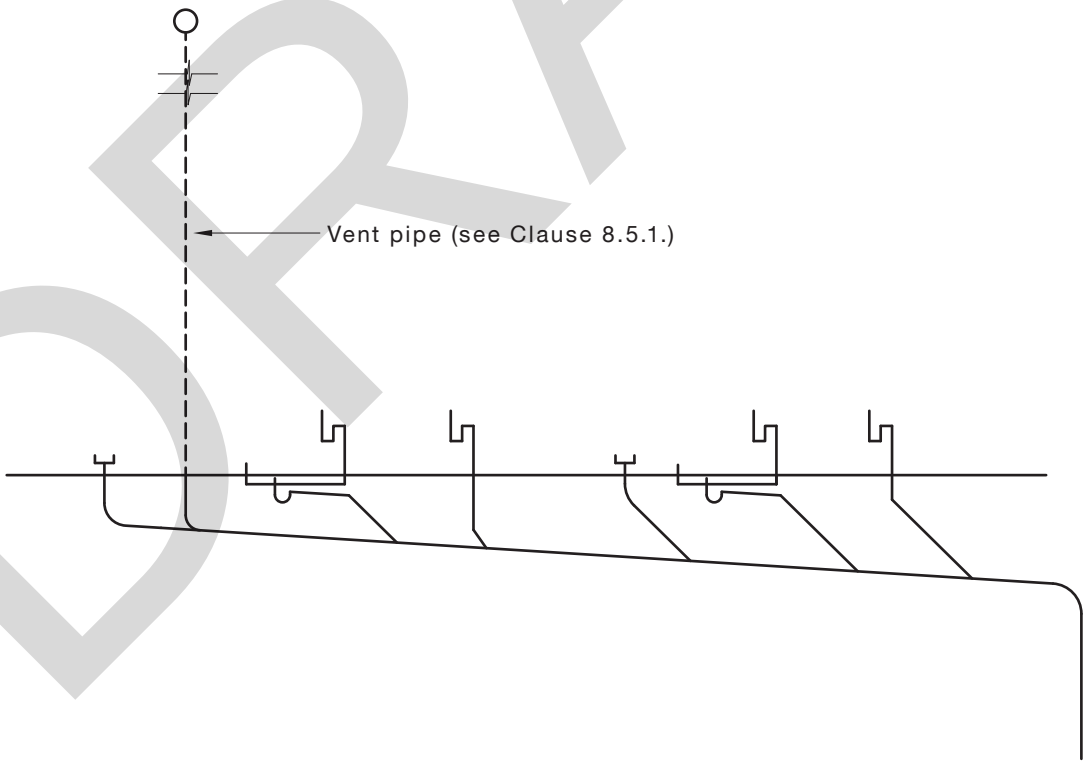

FIGURE 6.8.5 VENT CONNECTED TO GRADED PIPES

6.9 AIR ADMITTANCE VALVES

6.9.1 Air admittance valves

Air admittance valves conforming with AS/NZS 4936 may be used in sanitary plumbing systems for trap vents, group vents and stack vents and to ventilate branch drains. They shall not be used for the upstream venting of a main drain.

NOTE: Branches connected into a positive pressure area, such as near boundary traps in multistorey buildings, may need additional venting.

6.9.2 Requirements for use

The following requirements for air admittance valves apply:

(a) Air admittance valves shall be used only on systems that have at least one open upstream vent off the main drain. The upstream vent shall be sized in accordance with Table 3.9.3.1 and shall be not less than DN 50.

(b) Where the sanitary drains from three or more buildings on an allotment discharge to the sewerage system, the sanitary drainage system of each building shall have at least one open upstream vent connected to its sanitary drain.

(c) Air admittance valves shall have a determined airflow capacity not less than that specified in Table 6.9.2(A) when used as a trap vent, group vent or branch drain upstream vent, and Table 6.9.2(B) when used as a stack vent.

(d) An air admittance valve shall not be used as a stack vent where the stack extends through 10 or more floor levels.

(e) Where a sanitary plumbing system has a relief vent fitted to the stack, the relief vent shall be extended separately to atmosphere as an open vent.

(f) In Australia, air admittance valves that form an integral part of a fixture trap shall only be used as a trap vent.

TABLE 6.9.2(A)

MINIMUM DETERMINED AIRFLOW CAPACITY OF AIR ADMITTANCE VALVES WHEN USED AS A TRAP VENT, GROUP VENT OR BRANCH DRAIN VENT

Fixture unit loading of discharge pipe	Minimum airflow capacity of AAV L/s
6	1.9
9	2.3
10	2.4
12	2.7
18	3.3
24	3.8
30	4.2
36	4.6
42	5.0
48	5.3
54	5.7
60	6.0

NOTE: Further values may be interpolated or extrapolated using Equation 6.9.2(A), on which this Table is based:

For discharge pipes—

$$Q = 2 \sqrt{(FU/6.75)} \quad \ldots 6.9.2(A)$$

where

Q = determined airflow capacity of the valve in litres per second

FU = fixture unit loading

TABLE 6.9.2(B)

MINIMUM DETERMINED AIRFLOW CAPACITY OF AIR ADMITTANCE VALVES VENTING DISCHARGE STACKS

Fixture unit loading of discharge stack	Minimum determined airflow capacity of AAV L/s
1	3
2	4
4	6
6	7
10	9
12	10
15	11
20	13
25	15
30	16
40	18
60	23
80	26
100	29
200	41
300	51
400	58
500	65
600	72
1000	92

NOTE: Further values may be interpolated or extrapolated using Equation 6.9.2(B), on which this Table is based:

For discharge stacks—

$$Q = 8 \sqrt{(FU/6.75)} \qquad \ldots 6.9.2(B)$$

where

Q = determined airflow capacity of the valve in litres per second

FU = is the fixture unit loading

6.9.3 Location

Air admittance valves shall be—

(a) accessible for service, repair or replacement;

(b) located to allow adequate air to enter the valve;

(c) provided with ventilation openings when located in a wall space; and

(d) not installed where air is contaminated with solvents.

6.9.4 Installation

Air admittance valves shall be—

(a) connected to a graded fixture or combined fixture/discharge pipe conforming with Clause 8.5.1.1.

Traps with integral air admittance valves need not conform with the limitation to be at least 75 mm downstream of the trap as specified in Clause 8.5.1.1 nor with the requirement to have 100 mm air cushion as detailed in Figure 6.9.4;

(b) installed upright within 5° of the vertical as shown in Figure 6.9.4;

(c) installed in areas where the ambient temperature or water discharge does not vary below 0°C or above 60°C;

(d) installed not more than 1000 mm below the flood level of the fixture to which it is connected;

(e) protected from insect entry;

(f) protected from ultra-violet rays if installed outdoors; and

(g) protected from mechanical damage.

NOTES:

1 In addition to the open vents, air admittance valves, installed in accordance with Clause 6.9, may be used to provide additional venting of drains connected to a vacuum sewerage system collection bank.

2 Additional UV protection is not required where the UV protection is provided by the inherent properties of the materials of the valve body.

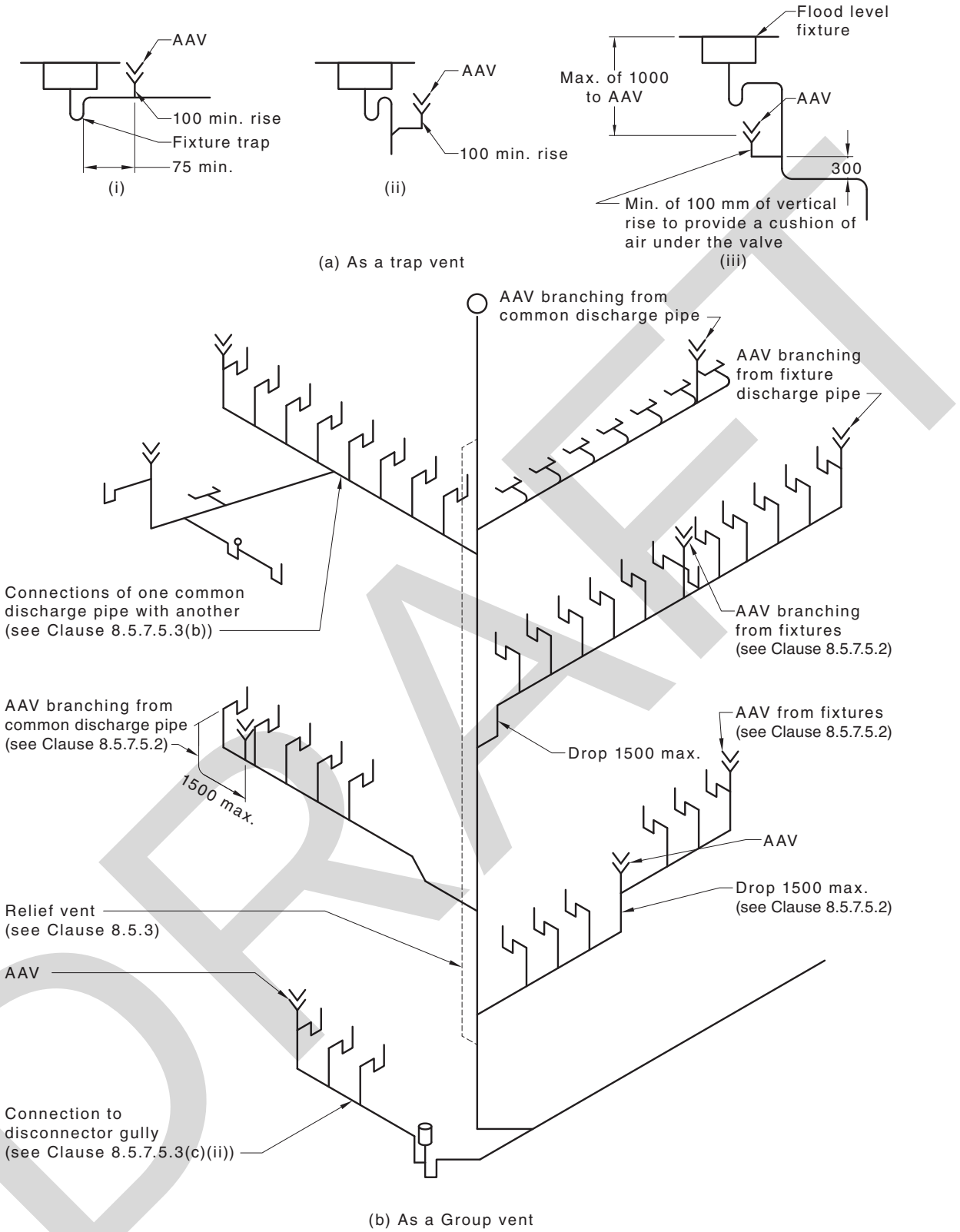

DIMENSIONS IN MILLIMETRES

FIGURE 6.9.4 FULLY VENTED MODIFIED SYSTEM USING AIR ADMITTANCE VALVES

6.10 PRESSURE ATTENUATORS

6.10.1 General

Pressure attenuators may be used in sanitary plumbing systems as an alternative to relief venting. Attenuators are used to counter the tendency for the loss of trap water seals resulting from positive pressure pulses in discharge stacks. Positive pressure pulses or transients arise from disruptions to airflow produced at changes in direction or restriction to the airflow path.

The size of the pressure attenuator is independent of stack size and fixture unit loading.

Although the application of pressure attenuators is not limited by building height, this Standard covers installation of pressure attenuators in sanitary plumbing stacks up to 50 floor levels only.

6.10.2 Installation of pressure attenuators

Pressure attenuators shall be—

(a) connected to stacks by means of 45° or sweep junctions;

(b) positioned above the point of connection in either a vertical or horizontal orientation; and

(c) adequately supported with allowance for thermal movement.

Connections to the stack, other than those immediately above the base of the stack or offset, shall be above the branch discharge pipes at that floor level.

NOTE: A typical connection of stack to pressure attenuators is shown in Figure 6.10.2.

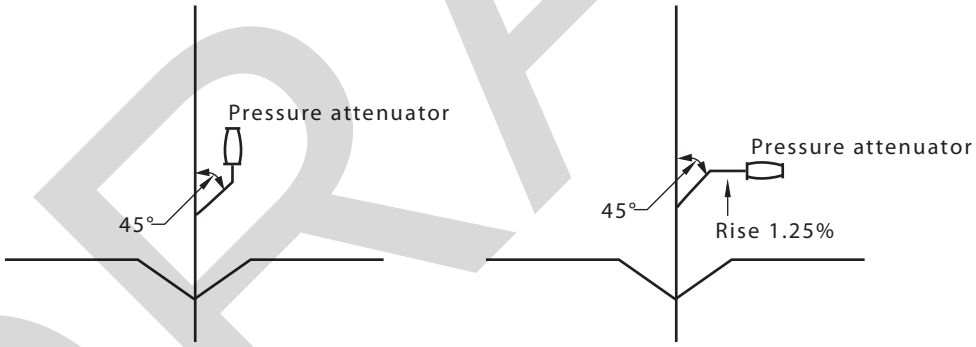

FIGURE 6.10.2 TYPICAL CONNECTION OF PRESSURE ATTENUATORS TO STACKS

6.10.3 Location

Pressure attenuators shall be accessible and installed in accordance with Table 6.10.3.

Where there is no stack offset, the connection for the lowest device shall be between the no-connection zone at the base of the stack and the first branch connected to the stack.

NOTE: For examples of pressure attenuator installations, see Figure 6.10.3.

Where there is a stack offset, the connection for the lowest device above the offset shall be between the no-connection zone above the graded offset within the stack and the first branch connected to the stack above that offset.

NOTE: For restricted zones, see Clause 8.6.2.3 and Figure 8.6.2.3.

Where the stack extends through more than 25 floors, two pressure attenuators, arranged in series, shall be used at the base of the stack.

NOTE: See Figure 6.10.3 (26–50 floors).

TABLE 6.10.3
LOCATION OF PRESSURE ATTENUATORS

Number of floor levels served by the stack above base or offset	Location of pressure attenuators
3–8	One at the base of the stack
9–15	One at the base of the stack, plus one at mid-level of the stack
6–25	One at the base of the stack, plus one at intervals not exceeding 5 floor levels
26–50	Two at the base of the stack, plus one at intervals not exceeding 3 floors up to level 25, and at intervals not exceeding 5 floors above level 25

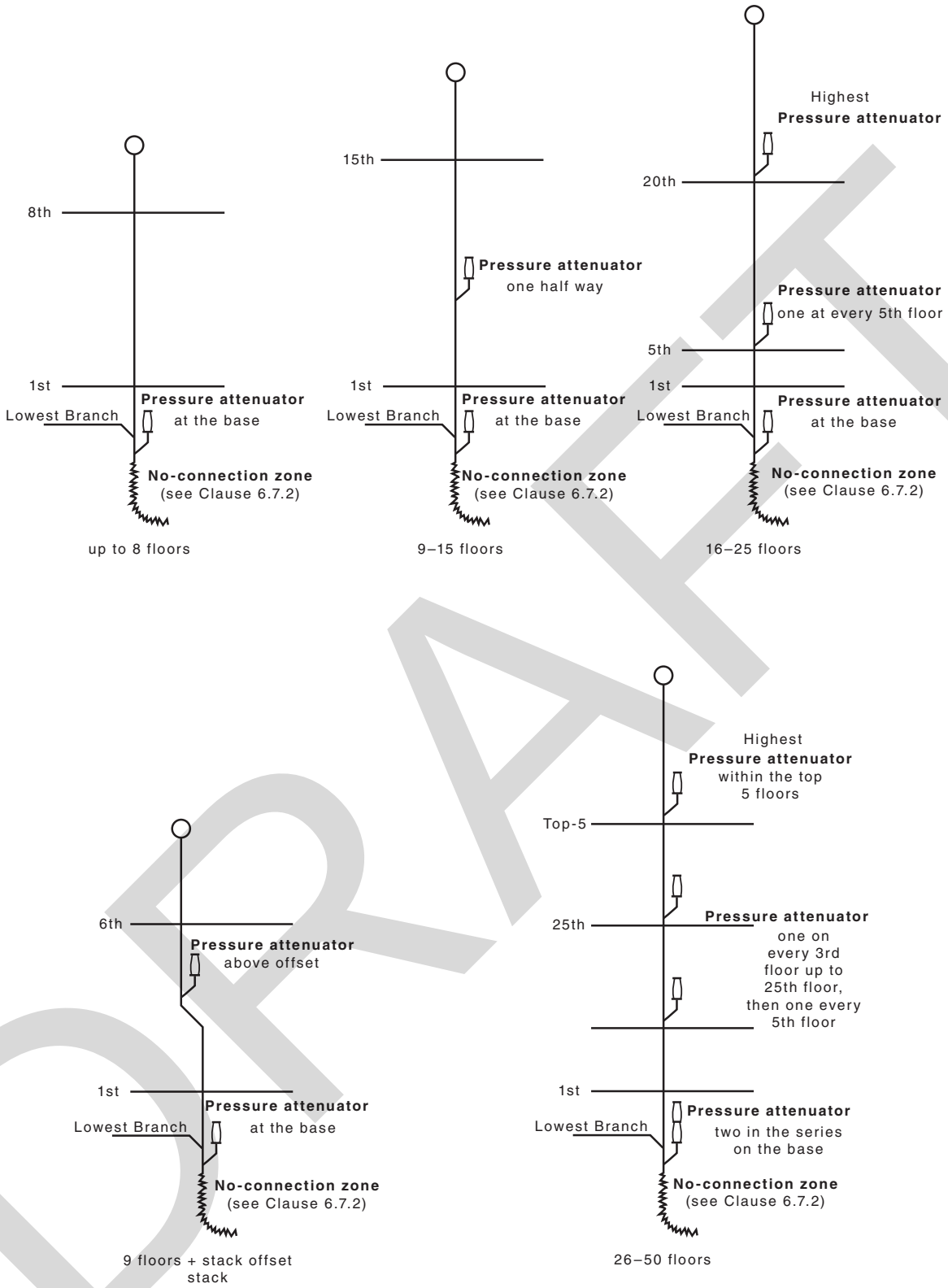

FIGURE 6.10.3 EXAMPLES OF TYPICAL PRESSURE ATTENUATOR INSTALLATIONS

6.11 RENOVATION

When renovating a sanitary plumbing system by relining, the requirements of Clause 3.16.3 shall apply.

SECTION 7 GREYWATER PLUMBING AND DRAINAGE SYSTEMS

7.1 SCOPE OF SECTION

This Section specifies requirements for the installation of greywater sanitary plumbing and drainage from the respective plumbing fixtures to greywater treatment or diversion devices and overflow therefrom where directed to the drainage system.

Greywater systems may include one of the following:

(a) *Direct diversion devices*:

(i) Diversion valve installed in the sanitary plumbing system.

(ii) In-ground diversion vessels.

(b) *Treatment systems*.

7.2 GENERAL

Greywater plumbing and drainage systems shall be designed in such a manner so that—

(a) sewage surcharge cannot enter in-ground greywater diversion vessels or greywater treatment systems; and

(b) rainwater, stormwater and surface water cannot enter a network utility operator's sewerage system or an on-site wastewater disposal system such as a septic tank or common effluent system.

C7.2 *Where greywater use is being considered, a number of authorities should be consulted. These authorities include the following:*

(a) The network utility operator(s) responsible for drinking water supply and sewerage or both.

(b) The environmental protection authority.

(c) The respective health authority.

(d) Local councils.

Storage of untreated greywater for longer than 24 h is not recommended and may not be permitted under health requirements.

7.3 MATERIAL AND PRODUCTS

All pipes and fittings from a sanitary fixture to a greywater diversion vessel shall conform with Section 2.

7.4 INSTALLATION REQUIREMENTS

Sanitary plumbing and drainage piping from a sanitary fixture to a greywater system shall conform with the following:

(a) In an area serviced by a network utility operator's wastewater system, a permanent connection to the wastewater system shall be maintained to enable the greywater to be redirected into the sanitary drain.

(b) Greywater to be returned to the network utility operator's wastewater system shall be conveyed via a disconnector gully.

(c) All access openings to any vessel shall be securely sealed and vermin-proofed.

(d) Greywater sanitary plumbing and drainage piping shall be installed directly to a treatment/diversion vessel and independently of other systems.

(e) Drainage from below-ground greywater diversion devices that gravitate to the sewer shall be protected from sewage surcharge by the installation of a reflux valve.

(f) All pipework greater than DN 80 connected to a diversion device or treatment system shall be clearly marked 'GREYWATER' at intervals not exceeding 1 m in accordance with AS 1345.

NOTE: A direct diversion device installed above the level of the overflow relief gully does not require protection from sewage surcharge.

SECTION 8 FULLY VENTED SYSTEMS AND FULLY VENTED MODIFIED SYSTEMS— DESIGN AND INSTALLATION

8.1 SCOPE OF SECTION

This Section specifies design requirements and methods of installation for fully vented systems and fully vented modified systems of sanitary plumbing.

8.2 SYSTEM TYPES

8.2.1 General

Systems installed in buildings may comprise either of the venting systems described in this Clause (8.2) or a combination of both systems.

8.2.2 Fully vented system

A fully vented system shall comprise a system of sanitary plumbing with provision for the individual venting of every fixture trap by means of a trap vent or air admittance valve (except for any traps that discharge to a floor waste gully) and in which a relief vent is installed and is in accordance with the maximum fixture unit loadings in Tables 8.2.2(A) and 8.2.2(B).

TABLE 8.2.2(A)

MAXIMUM FIXTURE UNIT LOADINGS FOR GRADED DISCHARGE PIPES

Grade %	Nominal size of pipe DN							
	40	50	65	80	100	125	150	225
5.00	6	15	51	65	376	953	1959	7098
3.35	5	10	29	39	248	686	1445	5583
2.50	4	8	21	27	182	509	1148	4513
2.00	×	×	×	20	142	410	953	3739
1.65	×	×	×	16	115	342	813	3258
1.25	×	×	×	×	×	254	627	2656
1.00	×	×	×	×	×	×	509	2272

NOTES:

1 Appendix C provides a table for conversion of grades as a percentage to grades as a ratio.

2 The symbol '×' indicates that the combination of pipe size and grade is not acceptable.

TABLE 8.2.2(B)

MAXIMUM LOADINGS ON STACKS IN FIXTURE UNITS

Size of stack DN	Maximum loading per floor level	Maximum loading per stack
(a) Four or more floor levels		
40	4	16
50	9	36
65	14	56
80	20	80
100	125	500
125	250	1000
150	600	2400
225	1750	7000
(b) Three or fewer floor levels		
40	2	6
50	5	15
65	6	18
80	13	40
100	65	195
125	150	450
150	250	750
225	950	2850

8.2.3 Fully vented modified system

A fully vented modified system shall comprise a system of sanitary plumbing differing from the fully vented system in that each branch or discharge pipe connected to the stack is vented and some individual fixture trap vents or air admittance valves are omitted, and in which groups of two or more fixtures that discharge to the same graded pipe or branch are vented by means of one or more group vents or air admittance valves.

8.3 SIZE OF DISCHARGE PIPES

8.3.1 General

Discharge pipes shall be not less than the size of the fixture traps to which they are connected except for water closet pans and slop hoppers, which may be connected to DN 80 discharge pipes.

8.3.2 Fixture unit loading

The size of any discharge pipe shall be determined from Table 8.2.2(A), taking into account—

(a) the sum of the fixture units that it carries [see Tables 6.2(A) and 6.2(B)]; and

(b) the proposed pipe grade.

8.3.3 Minimum size

The minimum size of any discharge pipe shall be DN 40.

8.3.4 Limitation on DN 80 pipes

Not more than two water closet pans shall be connected to a DN 80 discharge pipe.

8.3.5 Oversizing

Graded discharge pipes shall not be oversized for the sole purpose of acquiring a grade less than the minimum grades specified in Table 6.5.1.

8.4 SIZE OF STACKS

Stacks shall be sized in accordance with the following:

(a) The sum of the fixture unit ratings of all fixtures connected to any stack shall constitute the loading on the stack.

(b) Depending on the number of floor levels, the total loading on any stack shall not exceed the maximum given in Table 8.2.2(B).

(c) The total load increment from fixtures from any one floor level—

  (i) for stacks of four floor levels or more, shall not exceed 25% of the maximum stack capacity as specified in Table 8.2.2(B); and

  (ii) for stacks of three floor levels or less, shall not exceed 33% of the maximum stack capacity as given in Table 8.2.2(B).

(d) Such limitations as to the maximum fixture unit loading discharging into any stack within any one floor level, as specified in Item (c), shall also apply to connections to any section of a stack with a vertical length of 2.4 m into which one or more graded pipes, branches or stacks are connected as shown in Figure 8.4.

(e) Where the fixture unit loading at any one floor level exceeds the loading given in Table 8.2.2(B), the stack shall be increased in size.

(f) Where a DN 80 stack is installed as a fully vented modified system, the maximum number of water closet pans and slop hoppers connected to any graded pipe or branch shall not exceed two.

(g) Where any stack is offset, the offset section shall be sized—

  (i) as a straight stack, if the offset is 45° to the horizontal or greater; or

  (ii) as a graded pipe, if the offset is less than 45° to the horizontal, and the stack shall continue undiminished in size to above the highest connection.

Any reduction in stack size, as given in Table 8.5.3.5, shall only be made above the highest connection.

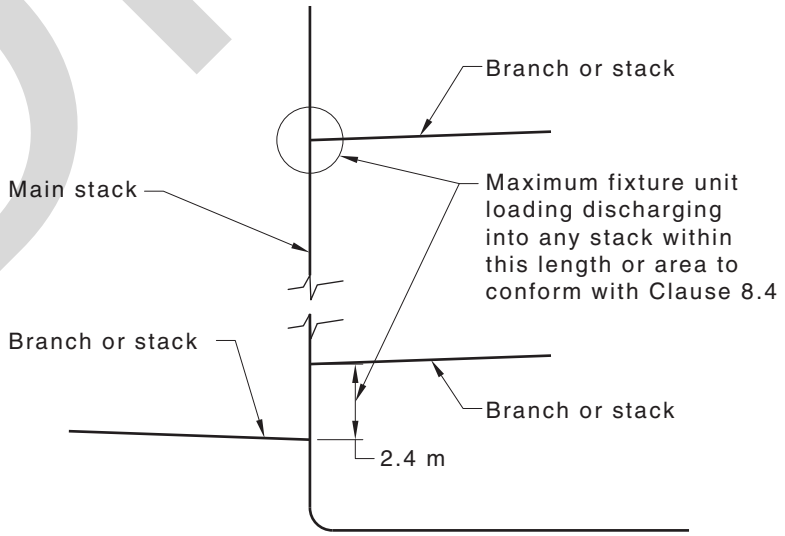

FIGURE 8.4 LIMITATIONS APPLYING TO BRANCH CONNECTIONS TO STACKS

8.5 VENTING

8.5.1 Trap vents

8.5.1.1 *Connection for fixtures*

Trap vents shall be connected to fixture discharge pipes in accordance with the following:

(a) For basins and bidets, the vent shall be connected not closer than 75 mm and not further than 600 mm from the crown of the fixture trap, provided no change of direction occurs between the trap and the vent connection, as shown in Figure 8.5.1.1.

(b) For fixtures other than basins and bidets, the vent shall be connected between 75 mm and 1500 mm from the crown weir of the fixture trap, provided where the S-trap is fitted or a bend is fitted downstream of the P-trap, the vent connection on the vertical discharge pipe is at least 300 mm from any bend at the base of the vertical section.

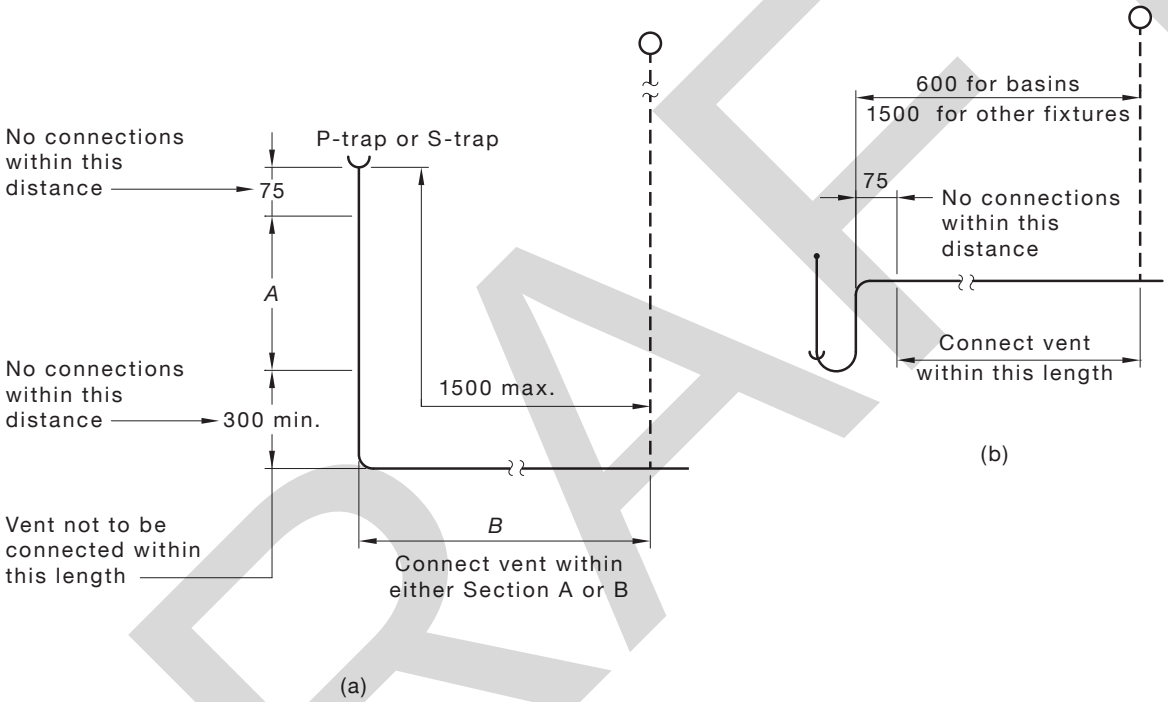

DIMENSIONS IN MILLIMETRES

FIGURE 8.5.1.1 TRAP VENTS

8.5.1.2 *Topmost fixture connected to the stack*

Where the topmost discharge pipe connection to the stack exceeds 6 m for combination pan rooms sinks (DN 100), slop hoppers (DN 100), water closet pans and 2.5 m for all other fixtures, a trap vent shall be connected in accordance with Clause 8.5.1.1.

8.5.1.3 *Size*

The minimum size of trap vents shall be as specified in Table 8.5.1.3.

TABLE 8.5.1.3

MINIMUM SIZE OF TRAP VENTS

Size of fixture trap DN	Size of trap vent DN
40	32
≥50 ≤100	40

8.5.1.4 *Installation*

Every trap vent shall be extended upwards to a point above the flood level rim of the fixture in accordance with one of the following:

(a) As a vertical vent to open air.

(b) On an ascending grade of at least 1.25%, as a vertical vent to the open air.

(c) On an ascending grade of at least 1.25% to a connection with a vertical or branch vent.

(d) Looped downwards, either vertically or on a descending grade of at least 1.25% to a connection at lower level with a vertical or branch vent.

NOTE: For typical installation of trap vents, see Figure 8.5.1.4.

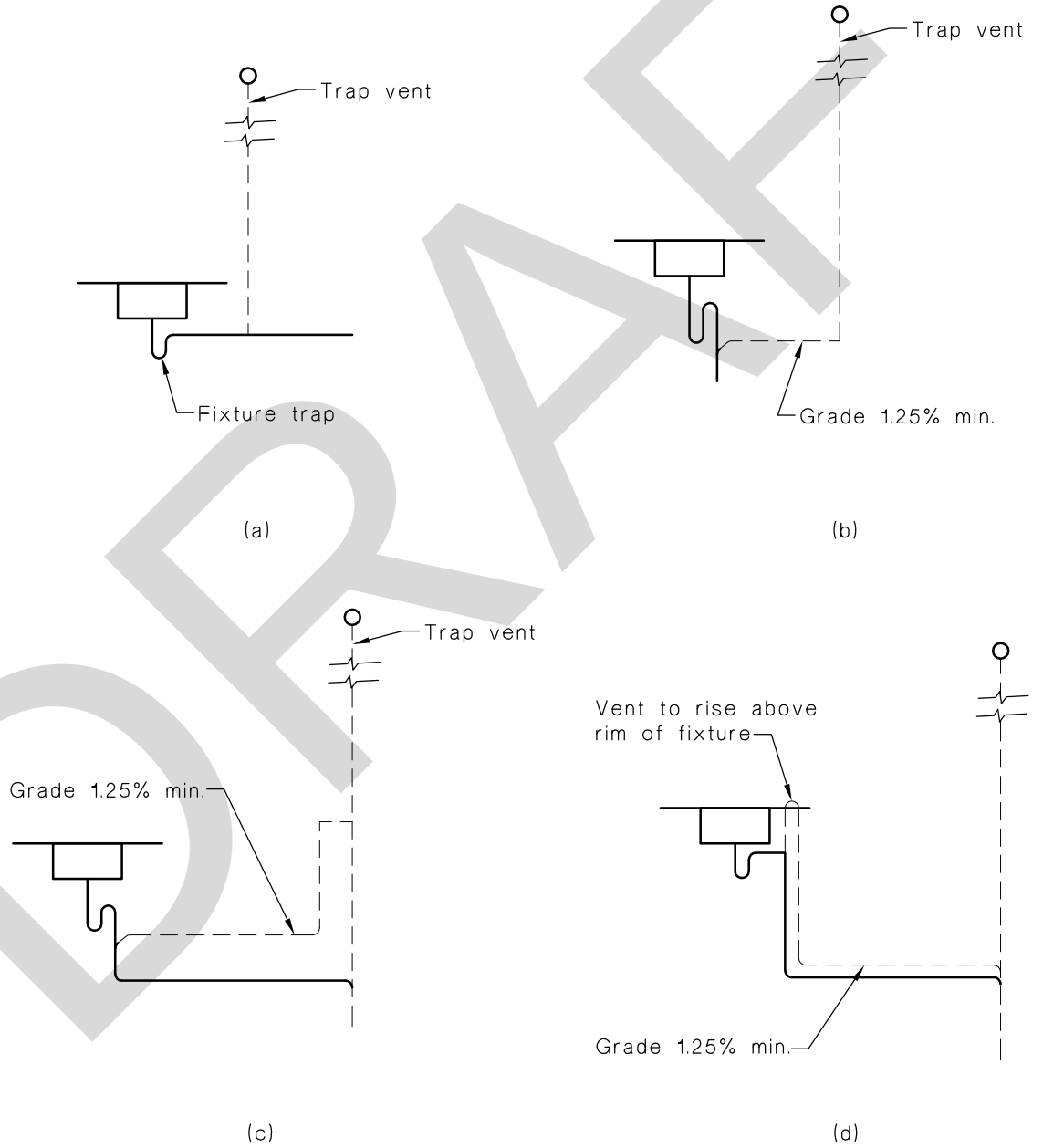

FIGURE 8.5.1.4 TYPICAL INSTALLATION OF TRAP VENTS

8.5.1.5 *Common vent for fixtures*

A single vent pipe may be used to ventilate the traps of any two fixtures connected in common to a vertical discharge pipe, provided—

(a) P-traps are used;

(b) where the discharge pipes from both fixtures are connected at the same level, either a Y-junction with a 90° included angle or a junction with opposed sweep entries is used;

(c) the vent pipe is sized for the larger trap; and

(d) the distance from the weir of either trap to the vent connections conforms with Clause 8.5.1.1.

NOTE: For examples of common vents for fixtures, see Figure 8.5.1.5.

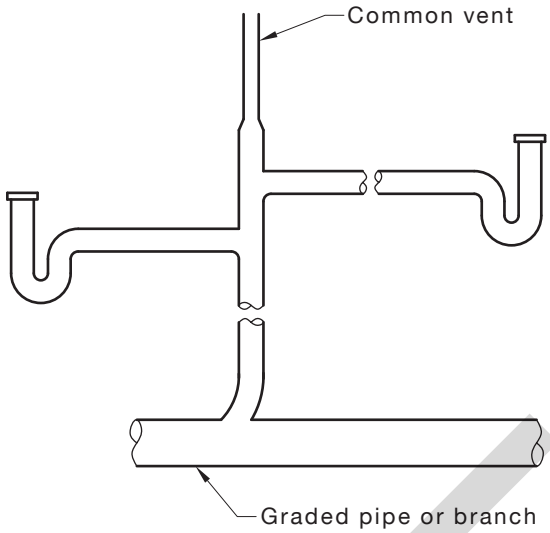

(a)

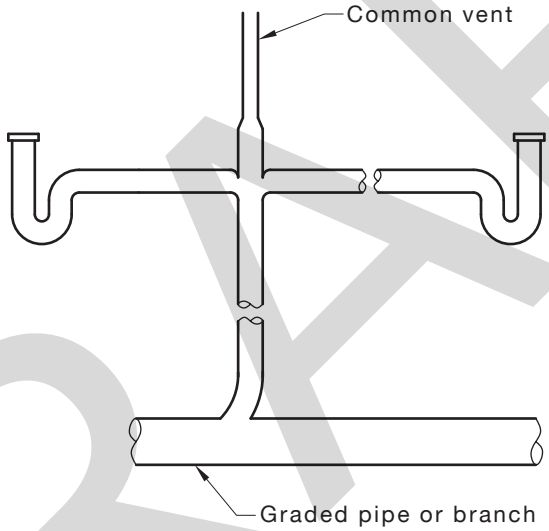

(b)

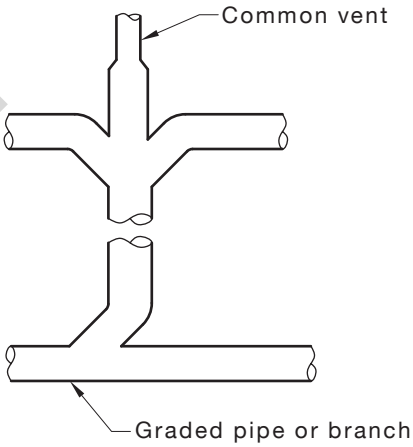

(c)

FIGURE 8.5.1.5 COMMON VENT FOR FIXTURES

8.5.2 Branch vents

8.5.2.1 *Size*

The size of any branch vent shall be in accordance with Table 8.5.2.1.

TABLE 8.5.2.1

MINIMUM SIZE OF BRANCH VENTS

Size of branch discharge pipe DN	Size of branch vent DN
40	32
50	40
65	40
80	50
100	50
150	80

8.5.2.2 *Arrangement*

Branch vents shall be used to interconnect two or more trap vents or group of vents.

The point of connection between any branch vent and any other vent shall be above the flood level rim of the highest fixture connected to the common graded pipe or branch served by the branch vent.

Branch vents may interconnect with relief vents or stack vents, or extend separately upwards to the open air.

8.5.2.3 *Size changes*

Where the branch discharge pipe varies in size along its length, the corresponding sections of a branch vent shall be sized separately in accordance with Table 8.5.2.1. Any enlargement in size in the branch vent shall occur prior to the junction with the trap vent or group vent as sown in Figure 8.5.2.3.

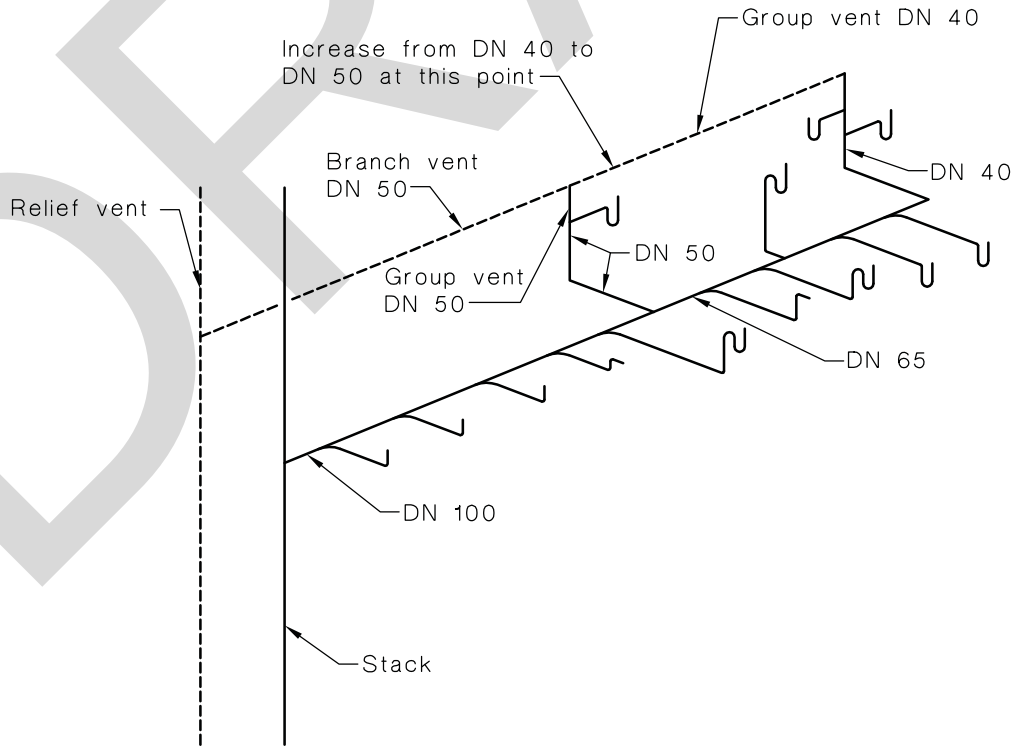

FIGURE 8.5.2.3 SIZING OF BRANCH VENTS

8.5.3 Relief vents

8.5.3.1 *General*

If one or more floors separate the floor levels of the highest and lowest branch pipe connected to the stack, a relief vent shall be installed in accordance with Clauses 8.5.3.2 to 8.5.3.5, or pressure attenuators may be installed as specified in Clause 6.10.

NOTE: For a typical relief vent installation, see Figure 8.5.3.1.

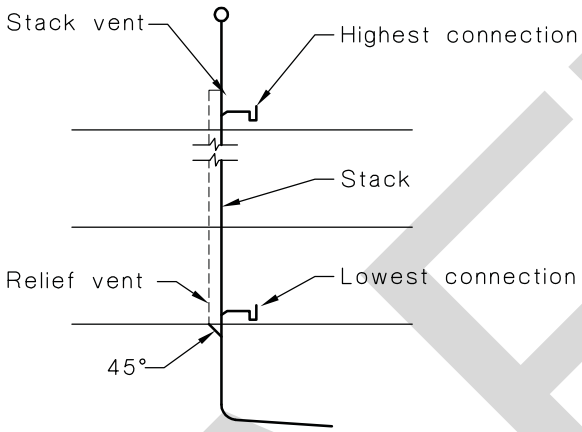

FIGURE 8.5.3.1 TYPICAL RELIEF VENT INSTALLATION

8.5.3.2 *At offsets in stacks*

Where any stack is offset at less than 45° to the horizontal, a relief vent shall be provided—

(a) on the stack below the offset if, disregarding the offset, one or more floors separate the floor levels of the highest and lowest branch pipe connected to the stack; and

(b) on the stack above the offset, if one or more floors separate the floor levels of the highest and lowest branch pipe connected to the section of the stack above the offset.

NOTE: For typical relief vent installations at stack offsets, see Figure 8.5.3.2.

The lower relief vent may interconnect with the upper relief vent above the flood level rim of the lowest fixture served by the upper relief vent.

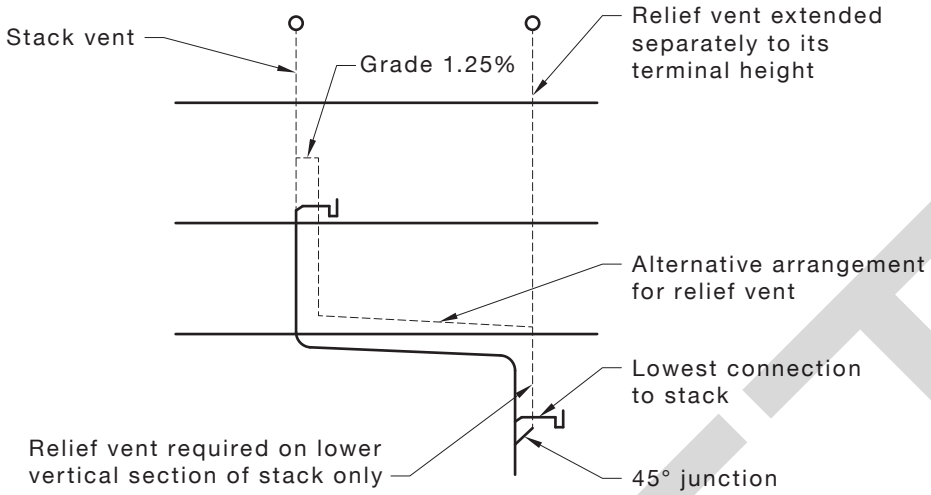

(a)

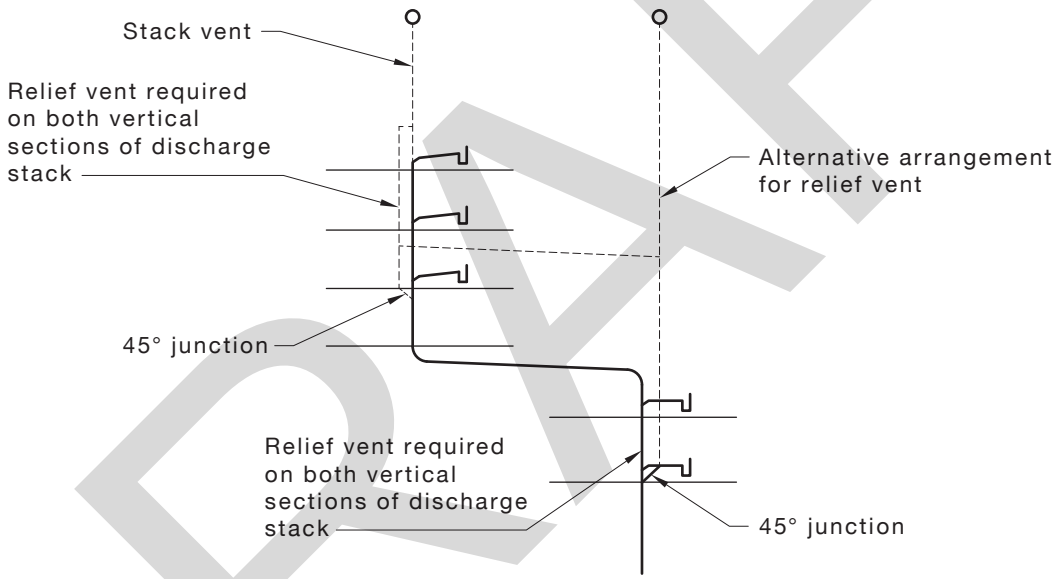

(b)

FIGURE 8.5.3.2 TYPICAL RELIEF VENT INSTALLATIONS AT STACK OFFSETS

8.5.3.3 *Connection*

Relief vents shall be connected to stacks, below the lowest connection, at an angle of 45°.

NOTE: For an illustration, see Figure 8.5.3.1.

8.5.3.4 *Upper termination*

Relief vents shall either—

(a) extend upwards at a minimum grade of 1.25% and interconnect with a stack vent, a header vent or another relief vent; or

(b) extend upwards to the open air and terminate in accordance with Clause 6.8.4.

8.5.3.5 *Size*

The size of any relief vent shall be in accordance with Table 8.5.3.5, having regard to the size of the stack, the sum of the rating of all fixtures connected and the developed length of the vent measured along the pipework from its lowest connection to the stack to its upper termination point.

A relief vent need not be larger than the stack to which it is connected.

TABLE 8.5.3.5

SIZE OF RELIEF VENTS AND STACK VENTS

Size of stack	Maximum fixture units connected	Maximum developed lengths of vents m							
		Required vent size DN							
DN		32	40	50	65	80	100	125	150
40	16	6	15						
50	20	8	15	46					
50	36	6	10	30					
65	20		12	40	110				
65	56		7	24	80	170			
80	20		8	27	70	110			
80	80			12	20				
100	150			9	25	70	280		
100	300			8	22	60	216		
100	500			6	19	50	197		
125	300				9	22	95	280	
125	750				7	19	72	230	
125	1100				6	14	62	190	
150	700				4	9	37	155	300
150	1300					7	30	130	250
150	2400					6	24	100	200
225	1700							16	62
225	4000							14	43
225	7000							6	31

8.5.4 Stack vents

8.5.4.1 *Extension*

The stack vent may extend separately to atmosphere or interconnect with the relief vent above the overflow level of the highest fixture connected to the stack, and shall be sized in accordance with Table 8.5.3.5, except that the stack vent need not be larger than the stack.

8.5.4.2 *Developed length*

The developed length of the stack vent shall be—

(a) for stacks with relief vents, the length of the relief vent; or

(b) for stacks without relief vents, the length of stack vent and stack to the point of connection of the lowest branch.

8.5.5 Cross-relief vents

Cross-relief vents shall be installed in accordance with the following:

(a) Vertical sections of stacks, 20 floor levels or more in height, measured between the highest graded pipe or branch connected and the point of connection of any relief vent shall be cross-relief vented to the relief vent at intervals of not more than 10 floor levels.

(b) The size of the cross-relief vent shall be the size of the main relief vent or the size of the stack, whichever is the smaller.

(c) Cross-relief vents shall connect into the stack at an angle of 45°.

(d) Cross-relief vents shall commence from below the lowest branch connection to the stack from the floor level concerned and join into the main relief vent above the flood level rim of the lowest fixture, discharging into the stack at that floor.

(e) For a stack with a steep offset, such stack shall be deemed to be straight with only one vertical section.

NOTE: For a typical installation of a cross-relief vent, see Figure 8.5.5.

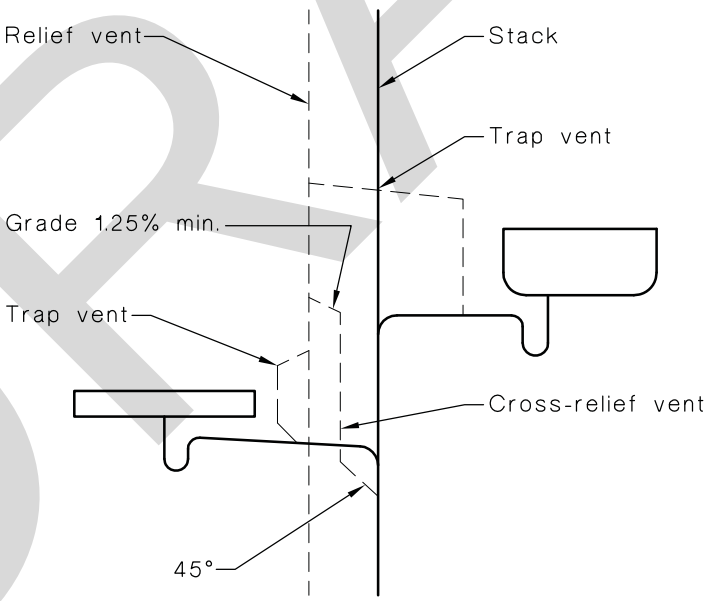

FIGURE 8.5.5 TYPICAL INSTALLATION OF CROSS-RELIEF VENT

8.5.6 Header vents

8.5.6.1 *General*

Stack vents may be connected at their uppermost end into a common header vent terminating at one point.

NOTE: For a typical header vent size, see Figure 8.5.6.1.

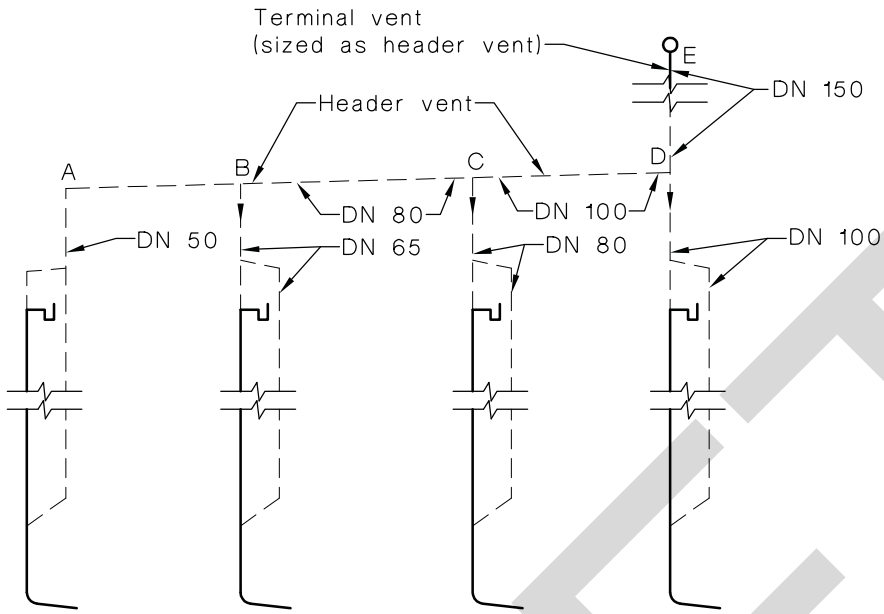

LEGEND:

Size of AB	=	DN 50
BC	=	1 + 2 equivalent units
	=	DN 80
CD	=	1 + 2 + 3 equivalent units
	=	DN 100
DE	=	1 + 2 + 3 + 6 equivalent units
	=	DN 150

FIGURE 8.5.6.1 TYPICAL HEADER VENT SIZE

8.5.6.2 *Sizing*

Header vents shall be sized in accordance with the following procedure:

(a) Determine from Table 8.5.6.2 the number of DN 50 vents that are equivalent to individual stack vents or relief vents intercepted at lower level by the header vent.

(b) Add together all such numbers.

(c) From Table 8.5.6.2 note the size of single equivalent header vent.

(d) Where a stack has a relief vent, take into account the size of only the relief vent in the determination of the equivalent number of DN 50 vents.

(e) Where any change in size is to be made on the graded header vent, increase the size downstream of, and adjacent to, the vent junction.

NOTE: Header vents need not be greater than DN 300.

TABLE 8.5.6.2

SIZE OF HEADER VENTS

Size of stack vent or relief vent DN	Equivalent number of DN 50 vents	Size of header vent DN
50	1	50
65	2	65
80	3	80
100	6	100
125	11	125
150	18	150
250	72	250
300	117	300

8.5.7 Group and common vents

8.5.7.1 *General*

One group vent shall be provided for each 10 fixtures, or part thereof, in any group connected to a common discharge pipe.

In order to determine which group of fixtures shall be group-vented, each fixture discharge pipe that is individually connected to the common discharge pipe shall be counted progressively from the fixture discharge pipe nearest the stack. Any vented fixture discharge pipe that is connected to the common discharge pipe shall not be included in such a method of counting.

8.5.7.2 *Arrangement*

Group vents shall be installed in accordance with the following:

(a) The first group vent, for all types of fixtures, shall connect to the discharge pipe of the most upstream fixture or floor waste gully at a maximum distance of 1.5 m from the fixture trap.

(b) The second group vent, and any additional group vents, shall be spaced along the common discharge pipe to divide the fixtures into approximately equal groups and each shall branch either from a fixture discharge pipe, increased in size where necessary to the size of the group vent, or from the top of the common discharge pipe.

(c) Where any vertical drop occurs in a common discharge pipe and fixtures are connected to the lower section, a group vent shall be provided—

(i) from the top of the vertical drop;

NOTE: For maximum vertical drop, see Clause 8.5.7.5.2.

(ii) between the vertical drop and the first downstream fixture; or

(iii) from the first downstream fixture discharge pipe.

The common vent pipe from any two fixtures installed in accordance with Clause 8.5.1.5 may also serve as a group vent.

8.5.7.3 *Sizing*

The size of group vents shall be determined by the size of the common discharge pipe in accordance with Table 8.5.7.3.

Where a common discharge pipe varies in size along its length, the group vent shall be sized in relation to the largest section of the common discharge pipe.

TABLE 8.5.7.3

SIZE GROUP VENTS

Size of common discharge pipe DN	Size of single group vent DN
40	32
50	40
65	40
80	50
100	50

8.5.7.4 *Termination*

Group vents shall terminate in the same manner as branch vents, as specified in Clause 8.5.2.2, or with an air admittance valve (AAV) in accordance with Clause 6.9.

8.5.7.5 *Group-vented branches*

8.5.7.5.1 *Size*

Group-vented branches shall be sized in accordance with Clause 8.5.7.3 except that, if the group vent is larger than the discharge pipe to which it connects, the discharge pipe shall be increased to the size of the group vent.

NOTE: A typical vented system showing group vents is depicted in Figure 8.5.7.5.1.

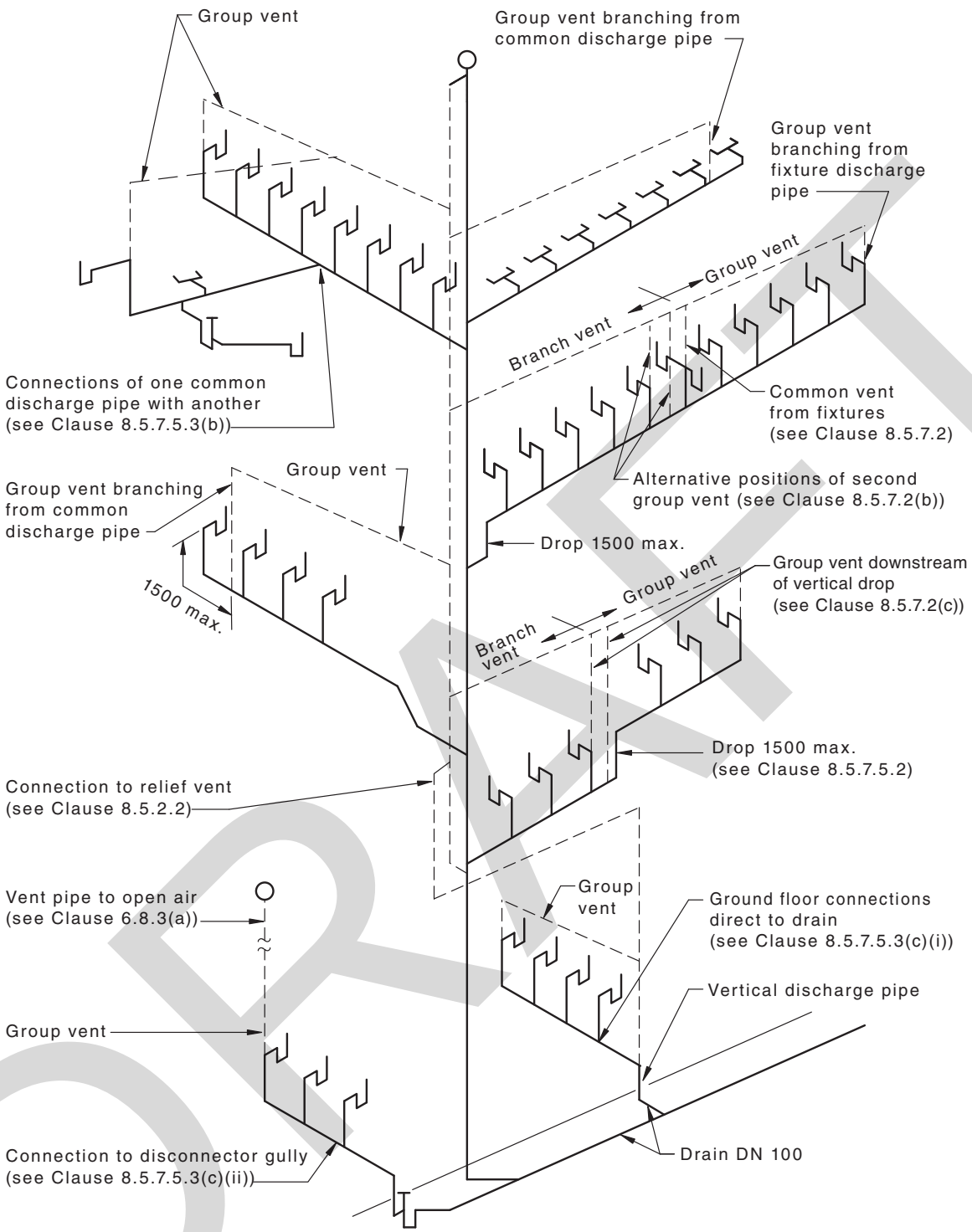

DIMENSIONS IN MILLIMETRES

FIGURE 8.5.7.5.1 TYPICAL FULLY VENTED MODIFIED SYSTEM SHOWING GROUP VENTS

8.5.7.5.2 *Arrangement*

Group-vented branches shall be installed on a grade with a maximum vertical drop of 1.5 m.

8.5.7.5.3 *Connection of common discharge pipe*

The common discharge pipe of any group-vented branch shall connect—

(a) directly to a stack;

(b) to a junction with another common discharge pipe; or

(c) for ground floor fixtures—

(i) direct to drain; or

(ii) to a disconnector gully.

8.5.7.5.4 *Connection of basins and bidets*

When connected to a group-vented branch, each basin and bidet shall have a DN 40 trap and fixture discharge pipe not greater than 2.5 m in length with a maximum vertical drop of 1.5 m. The maximum number of bends in a fixture discharge pipe shall be in accordance with Clause 9.5.4.

NOTE: A typical connection of a basin or bidet of a group-vented branch is depicted in Figure 8.5.7.5.4.

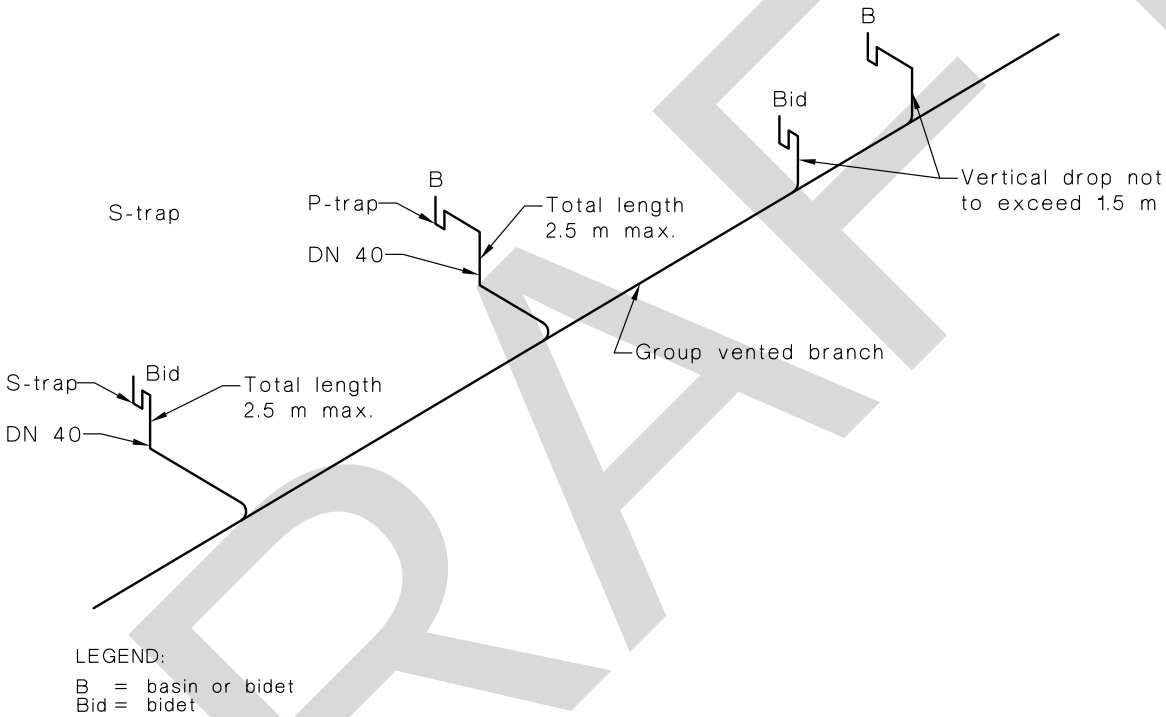

FIGURE 8.5.7.5.4 TYPICAL CONNECTION OF BASIN OR BIDET TO A GROUP-VENTED BRANCH

8.5.7.5.5 *Connection of all other fixtures*

Fixtures other than basins and bidets shall—

(a) be connected separately to the group-vented branch except as provided in Clause 8.5.7.2;

(b) have a length of any DN 100 fixture discharge pipe not greater than 6 m;

(c) have a length of any fixture discharge pipe smaller than DN 100 not greater than 2.5 m;

(d) have a maximum vertical interval between the crown of the trap and the top of the group vented branch of 2.5 m;

(e) have the maximum number of bends in a fixture discharge pipe conform with Clause 9.5.4; and

(f) have a reducer fitting installed where a water closet pan with a DN 100 outlet connects to a graded pipe or branch of DN 80.

8.6 OFFSETS IN STACKS

8.6.1 Steep offsets

8.6.1.1 *General*

A steep offset is any offset made at an angle of more than 45° to the horizontal.

8.6.1.2 *Sizing of stack*

The size of the steep offset stack shall be in accordance with Clause 8.4(g) and the maximum fixture unit loading shall conform with Table 8.2.2(B).

8.6.1.3 *Venting*

Venting for the steep offset stack shall be in accordance with the following:

(a) Where a relief vent is installed below the lowest connection to the stack as specified in Clause 8.5.3.1, additional relief vents in close proximity to the bends of the offset are not required.

(b) Cross-relief vents shall be installed in accordance with Clause 8.5.5.

(c) Stack vents shall be installed in accordance with Clause 8.5.4.

8.6.2 Graded offsets

8.6.2.1 *General*

A graded offset is any offset made at an angle of less than 45° to the horizontal.

8.6.2.2 *Minimum grade*

The minimum grade of a graded offset shall be in accordance with Table 8.6.2.2.

TABLE 8.6.2.2

MINIMUM GRADE OF OFFSETS

Size of graded section DN	Min. gradient %
≤80	2.50
100	1.65
125	1.25
150	1.25
225	0.60
300	0.40

8.6.2.3 *Restricted connection zones above the graded offset*

For graded offsets, no connection shall be made within—

(a) 600 mm of the bend, when the stack extends not more than five floor levels above the offset;

(b) 1 m of the bend when the stack extends more than five floor levels above the offset; or

(c) 2.5 m, when foaming is likely to occur.

NOTE: For restricted connection zone above the graded offset, see Figure 8.6.2.3.

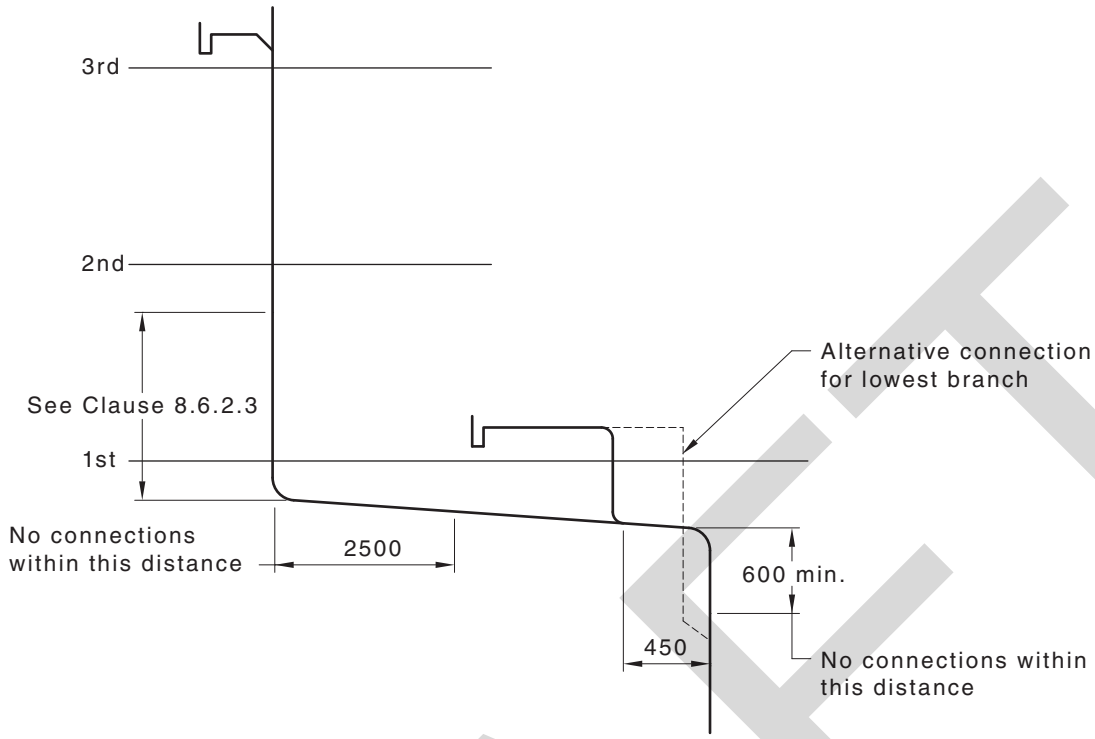

DIMENSIONS IN MILLIMETRES

FIGURE 8.6.2.3 CONNECTIONS AT GRADED OFFSET

8.6.2.4 *Restricted connection zone below the graded offset*

No connection shall be made within 600 mm of the bend.

NOTE: For restricted connection zone below the graded offset, see Figure 8.6.2.4.

8.6.2.5 *Restricted connection zone within the graded offset*

No connection shall be made within—

(a) 2.5 m of the upper bend; or

(b) 450 mm of the lower bend.

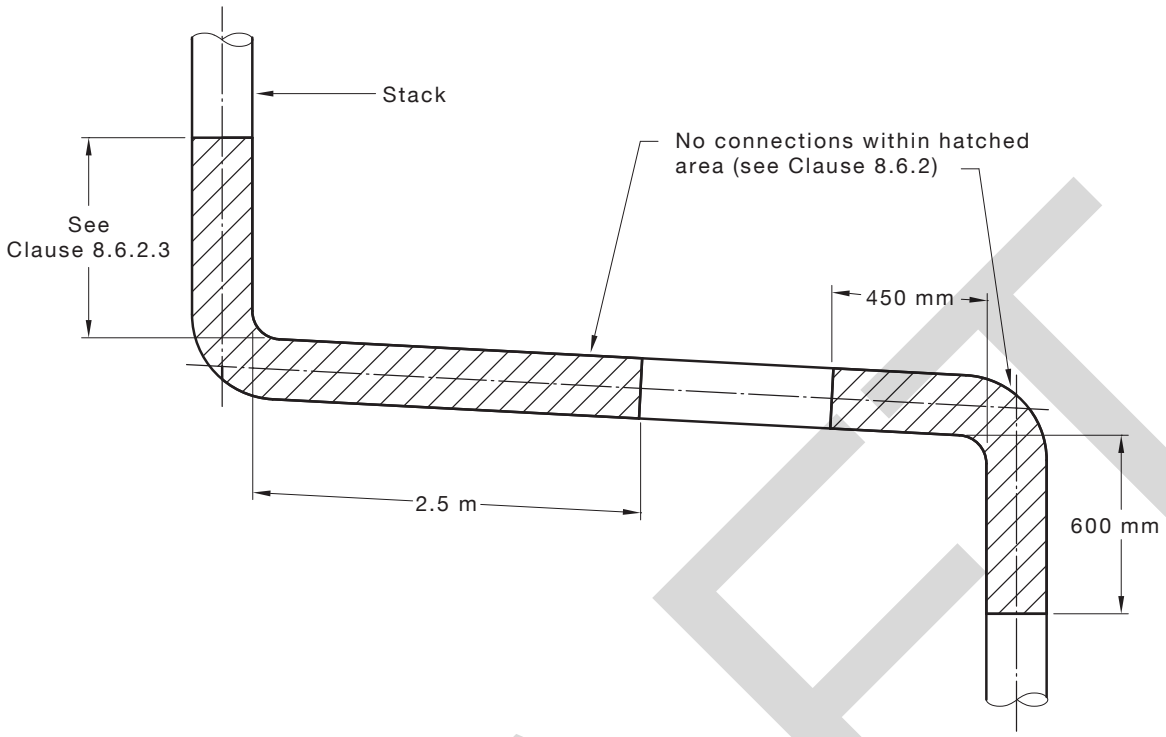

FIGURE 8.6.2.4 CONNECTIONS AT OFFSET OF STACK

8.6.2.6 *Sizing of stack*

The size of the graded offset stack shall be in accordance with Clause 8.4(g) and the maximum fixture unit loading on the graded section shall conform with Table 8.2.2(A).

8.6.2.7 *Venting*

Positive air pressure pulses in a stack with a graded offset shall be controlled by either one of the following methods:

(a) Venting in accordance with the following:

(i) Relief vents shall be installed in accordance with the relevant clauses of Clause 8.5.3.

NOTE: For typical installation, see Figure 8.5.3.1 or Figure 8.5.3.2.

(ii) Cross-relief vents shall be installed in accordance with Clause 8.5.5.

(iii) Stack vents shall be installed in accordance with Clause 8.5.4.

(b) Using pressure attenuators in accordance with Clause 6.10.

SECTION 9 SINGLE STACK SYSTEMS AND SINGLE STACK MODIFIED SYSTEMS—DESIGN AND INSTALLATION

9.1 SCOPE OF SECTION

This Section specifies design and installation requirements for single stack systems and the single stack modified systems of sanitary plumbing.

9.2 SYSTEM DESIGN

9.2.1 General

Single stack systems are designed on the principle that the stack is to be not less than DN 100; however, variations to these requirements are provided for in this Standard.

Single stack systems are also designed on the principle that the air within the discharge pipes from fixtures, the stack and the stack vent allow fixtures to be connected to the stack without the need for individual trap vents or, in the case of ranges of fixtures, venting of the common discharge pipe.

9.2.2 Single stack system

In domestic or residential buildings, fixtures shall be connected to the stack individually or through floor waste gullies.

In commercial or industrial buildings, fixtures may be connected to the stack individually, through floor waste gullies or in ranges of the same type of fixtures.

The maximum number of floor levels through which the stack passes shall be as specified in Clause 9.2.5.

NOTE: For examples of single stack systems, see Figure 9.2.2.

9.2.3 Single stack modified system

The single stack modified system permits stacks to receive a higher discharge loading or to be extended to serve a greater number of floor levels by introducing a relief vent and cross-vents, or by the use of pressure attenuators. Where cross-vents are used, they shall be installed between the relief vent and stack. Where pressure attenuators are used, they shall be installed in accordance with Clause 6.10.

The single stack modified system allows these increases in loading or height without increasing the nominal size of the stack.

The maximum number of floor levels through which the stack passes shall be as specified in Clause 9.2.5.

NOTE: For examples of single stack modified systems, see Figure 9.2.3.

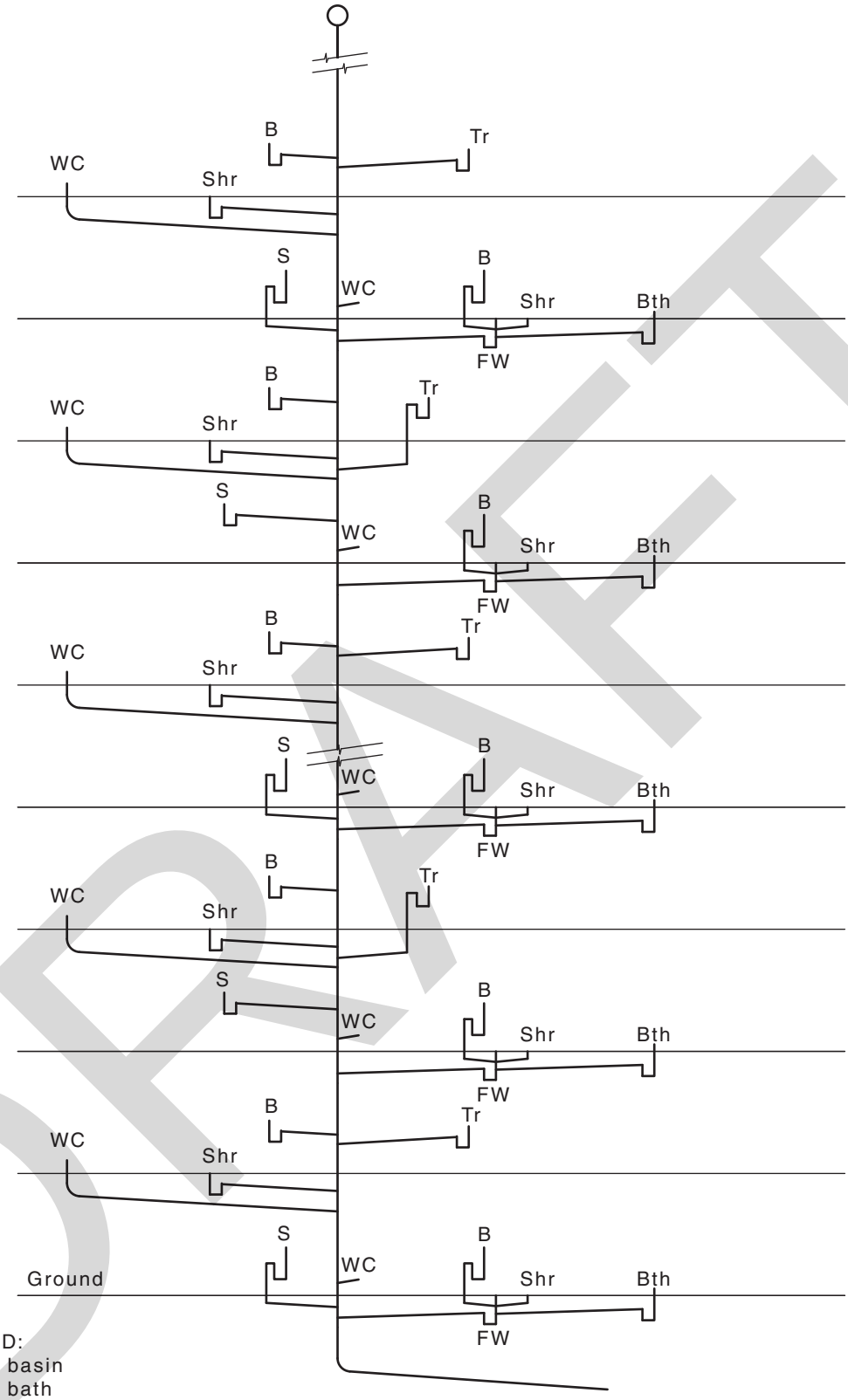

LEGEND:
B = basin
Bth = bath
FW = floor waste
Shr = shower
Tr = trough
WC = water closet

(a) Domestic or residential building
(see Table 9.7.1(A))

FIGURE 9.2.2 (in part) EXAMPLES OF SINGLE STACK SYSTEMS

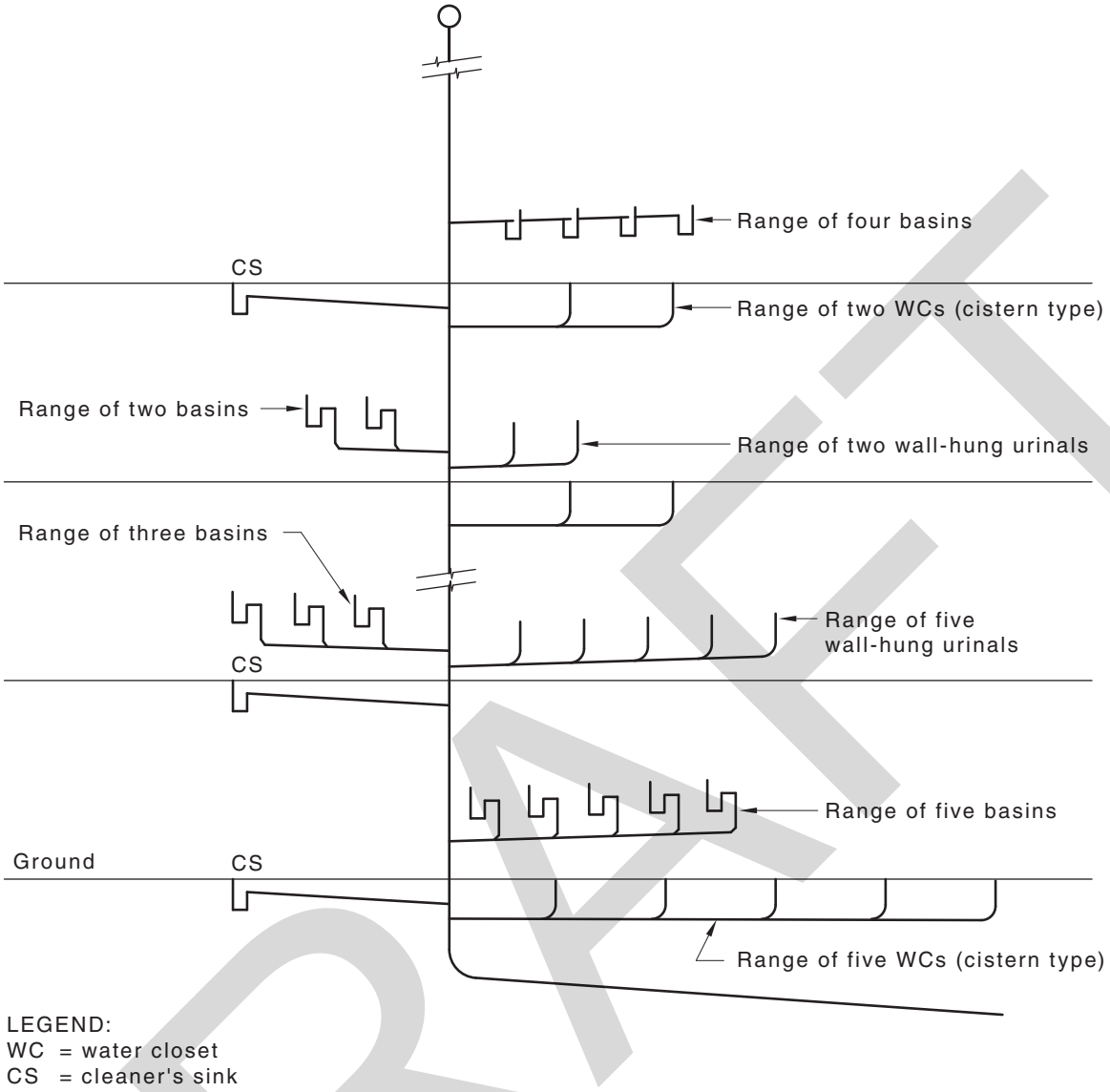

(b) Commercial or industrial building
(see Table 9.7.1(B))

FIGURE 9.2.2 (in part) EXAMPLES OF SINGLE STACK SYSTEMS

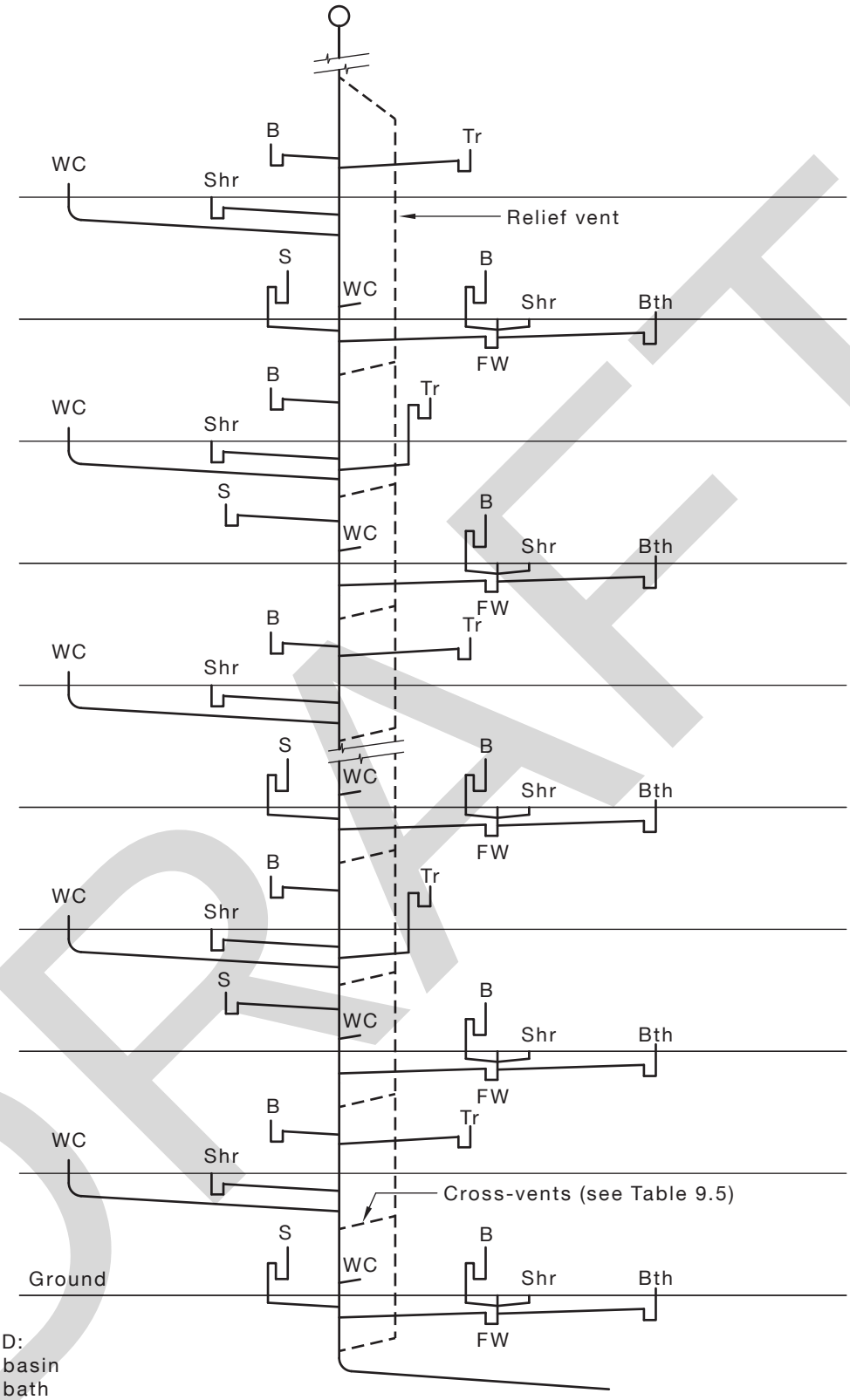

LEGEND:
B = basin
Bth = bath
FW = floor waste
Shr = shower
Tr = trough
WC = water closet

(a) Domestic or residential building
(see Table 9.7.2(A))

FIGURE 9.2.3 (in part) EXAMPLES OF SINGLE STACK MODIFIED SYSTEMS

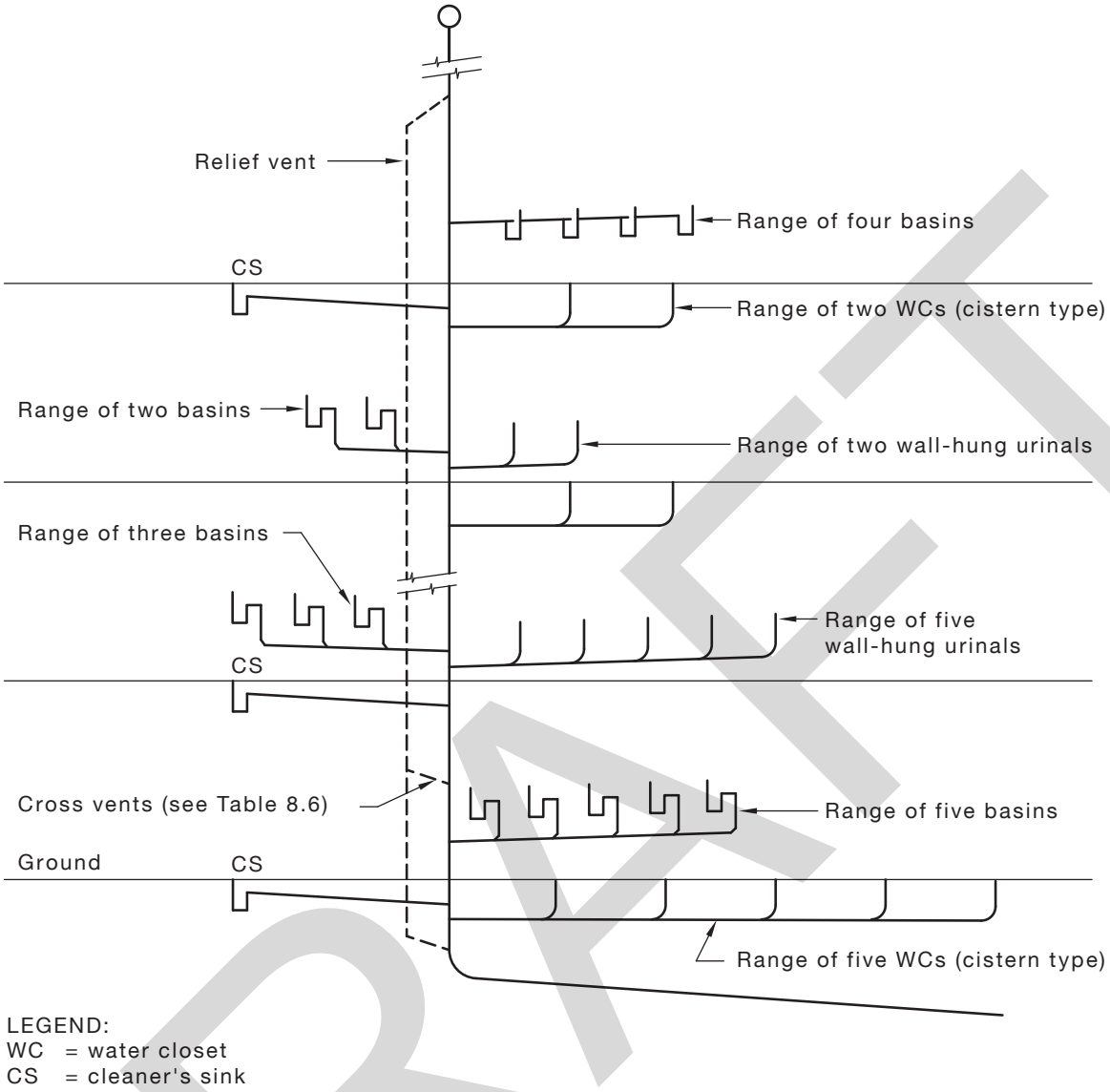

(b) Commercial or industrial building
(see Table 9.7.2(B))

FIGURE 9.2.3 (in part) EXAMPLES OF SINGLE STACK MODIFIED SYSTEMS

9.2.4 Design requirements

When sizing stacks, consideration shall be given to—

(a) the load-production effect of fixtures connected to the stack;

(b) the maximum number of floor levels connected to the stack;

(c) the type of building served; and

NOTE: See Clause 9.7.

(d) whether relief vents and cross-vents are installed.

9.2.5 Number of floor levels

The maximum number of floor levels through which the stack passes, as specified in Tables 9.7.1(A), 9.7.1(B), 9.7.2(A) and 9.7.2(B), shall be counted from the point at which the stack connects to the drain or graded pipe and the highest floor level on which a fixture is connected. Where the distance between the invert of the drain or graded pipe and the lowest floor level exceeds 2.4 m, that floor shall be counted as an additional floor level.

NOTE: For examples of floor number levels, see Figure 9.2.5.

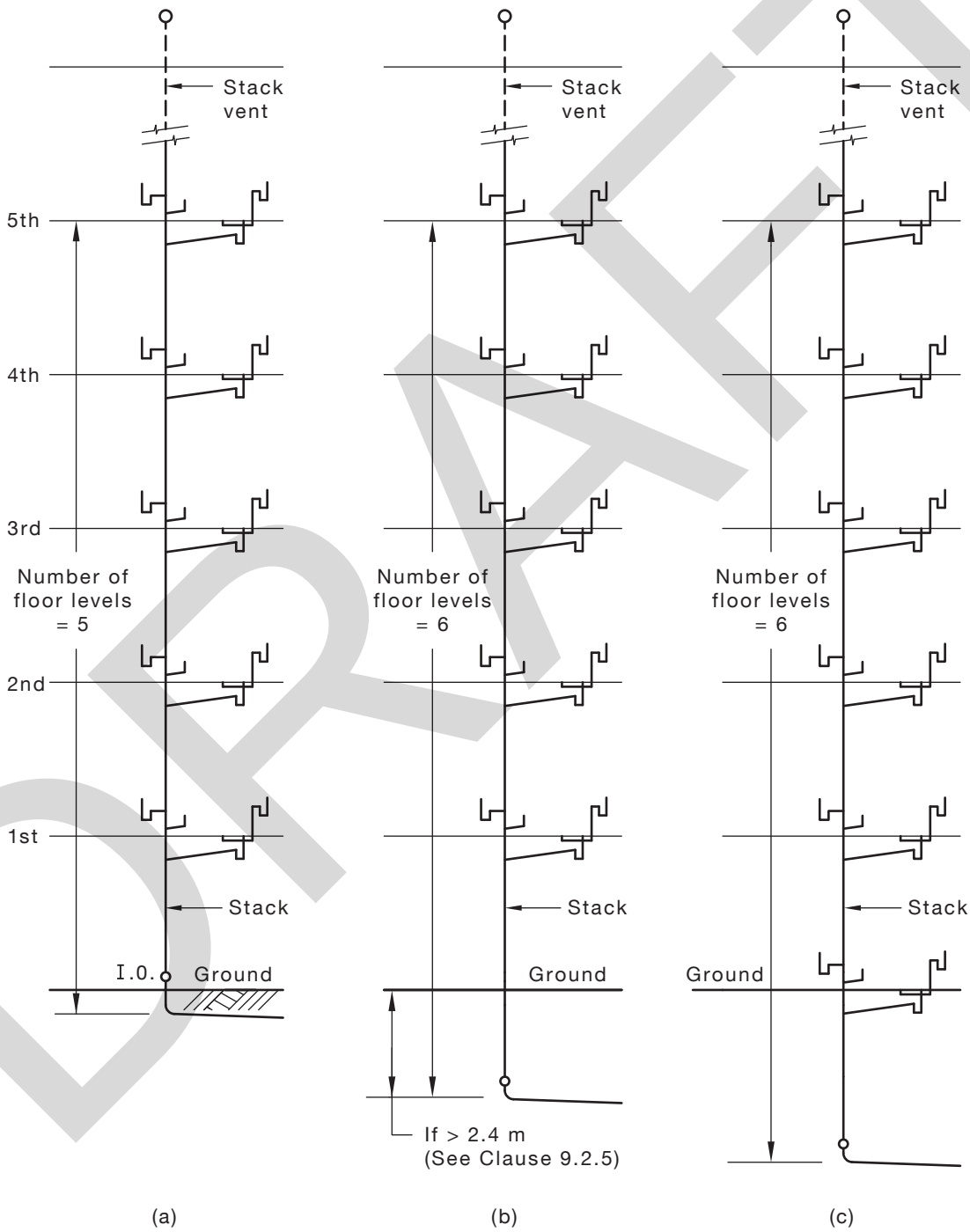

FIGURE 9.2.5 EXAMPLES OF NUMBER OF FLOOR LEVELS

9.3 RATING OF FIXTURES

The fixture unit ratings set out in Table 6.2(A) shall apply to fixtures connected in accordance with this Section.

Where the discharge from plant room equipment is connected to any single stack system, the loading in fixture units shall be determined in accordance with Table 6.2(B).

9.4 FIXTURES TO BE CONNECTED

9.4.1 Domestic or residential buildings

The type and total number of fixtures that may be connected to a single stack from any floor level in a residential building shall not exceed the following:

(a) Two basins.

(b) Two baths.

(c) Two bidets.

(d) Two clothes-washing machines.

(e) Two dishwashing machines.

(f) Two kitchen sinks (double or single domestic with or without food waste disposal units).

(g) Two laundry troughs.

(h) Two showers.

(i) Two water closet pans.

(j) Two floor waste gullies.

(k) Two bar sinks.

NOTE: See also Table 9.7.1(A).

9.4.2 Commercial or industrial buildings

The type and total number of fixtures that may be connected to a single stack from any floor level in a commercial building by fixture discharge pipes, common discharge pipes or ranges of fixtures shall not exceed the following:

(a) For separate pipes—

(i) five basins;

(ii) one cleaner's sink;

(iii) one drinking fountain;

(iv) one sink;

(v) five urinals (wall-hung);

(vi) five water closet pans;

(vii) two showers;

(viii) one 3 m slab type urinal; or

(ix) two bar sinks.

NOTE: See also Table 9.7.1(B).

No additional or alternative fixtures shall be connected except tundishes receiving minor discharges.

At any floor level, the maximum discharge from all floor waste gullies shall not exceed five basins, one drinking fountain, one cleaner's sink and two showers.

NOTE: See Note 3 of Table 6.2(A).

(b) For ranges of fixtures—

(i) five basins;

(ii) five urinals (wall-hung); and

(iii) five water closet pans.

9.5 CONNECTION OF FIXTURES WITHOUT TRAP VENTS

9.5.1 Separate fixture discharge pipes

Each fixture shall be connected to the stack by a separate unvented fixture discharge pipe of a prescribed length, size and grade in accordance with Table 9.5.1, except as allowed in Clause 9.5.2. Where the length of the discharge pipe exceeds that allowed in Table 9.5.1, a trap vent shall be provided in accordance with Clause 8.5.1.

TABLE 9.5.1

FIXTURE DISCHARGE PIPES WITHOUT TRAP VENTS TO STACKS

Fixture DN	Maximum length m	Grade %
Waste fixtures	2.5	2.50 to 5.00
Water closet pans 100	6.0	1.65 to 5.00
80	2.5	1.65 to 5.00
Urinals 50–80	2.5	2.50 to 5.00
100	6.0	1.65 to 5.00

NOTE: For sizes of fixture discharge pipes, see Table 6.2(A).

9.5.2 Acceptable variations

The following variations are acceptable:

(a) Stacks, either straight or with offsets as specified in Clause 8.6, that receive only the discharge from waste fixtures may have unvented fixture discharge pipes installed in accordance with Table 9.5.1.

(b) Stacks without offsets may be sized having a maximum fixture unit loading in accordance with Table 9.5.2.

The requirements of Clause 9.4, whether the stack is straight or with an offset, as regards the maximum number and type of waste fixtures which may be connected to the stack from any floor, level need not apply.

(c) Not more than one-quarter of the maximum loading as shown in Table 9.5.2 may discharge into the stack at any one floor level except where the stack is DN 50 or smaller, or in accordance with Clause 9.8.9.

(d) Fixture discharge pipes jointed together close to the stack may be installed in accordance with Clause 9.5.6.

(e) Fixture discharge pipes connected to a stack by means of a short vertical pipe may connect to the stack in accordance with Clause 9.5.7 and Figure 6.6.3.2(b).

(f) For stacks of sizes between DN 65 and DN 100 only, two fixtures of the same type (fixture pairs) may jointly discharge to the common fixture trap and fixture discharge pipe in accordance with Clause 6.4.4.

(g) For stacks of sizes between DN 100 and DN 150 only, fixtures of the same type (ranges of fixtures in commercial-type buildings) that separately discharge to a common discharge pipe may be in accordance with Clause 9.5.10.

TABLE 9.5.2

SIZE OF WASTE STACK

Size of stack DN	Maximum fixture unit loading
40	2
50	6
65	15
80	30
100	120

9.5.3 Opposed junctions

The size and location of junctions between discharge pipes and the discharge stack designed to prevent cross-flow and water seal siphonage shall conform with Clause 6.6.3.

9.5.4 Bends in fixture discharge pipes

The number of bends in a fixture discharge pipe shall conform with the following:

(a) Other than the discharge pipes from basins and bidets, not more than two bends in the horizontal plane and three bends in the vertical plane shall be allowed.

(b) Each basin and bidet shall have not more than two bends in the horizontal plane and two bends in the vertical plane.

(c) For the purpose of this Clause, a bend of 45° or less shall not be considered as a change in direction or grade.

9.5.5 Vertical dropper on fixture discharge pipes

The maximum length of a vertical dropper on any fixture discharge pipe shall be 2.5 m, except for basins and bidets where it shall be 1.5 m.

9.5.6 Connection from waste fixtures to stack

Two fixture discharge pipes, including discharge pipes from floor waste gullies, receiving the discharge from waste fixtures may connect to the stack within a distance of 1 m by means of a 45° junction, provided—

(a) the angle between the two fixture discharge pipes is not greater than 45°;

(b) the outlet of the junction is one size larger than the largest fixture pipe, except for a floor waste gully that does not receive the discharge from a fixture; and

(c) the section of pipe downstream of the 45° junction is included as part of the maximum length of the fixture discharge pipe.

NOTE: For a diagram of the above, see Figure 9.5.6.

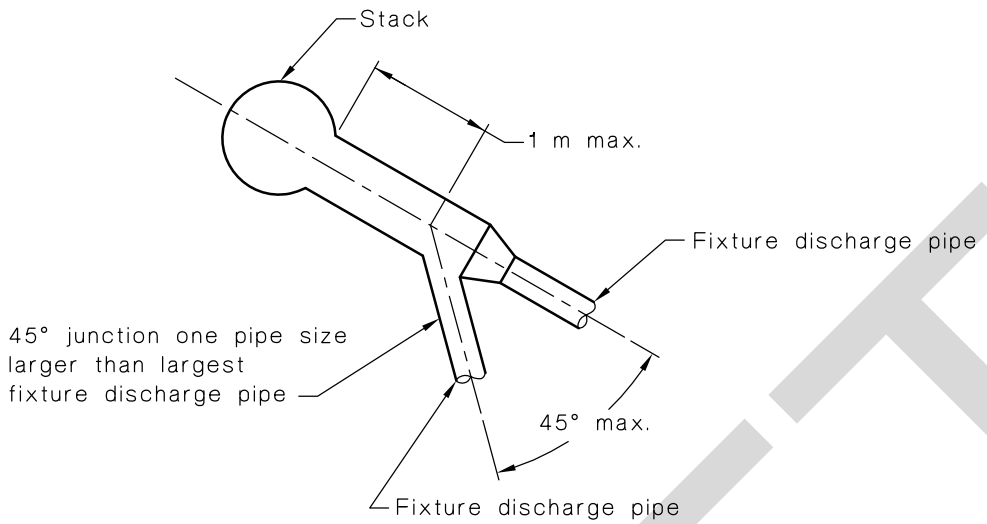

FIGURE 9.5.6 UNEQUAL STACK JUNCTION

9.5.7 Connection from waste fixtures to stack below restricted zone

Fixture discharge pipes, including those from floor waste gullies, may be connected immediately below the restricted zone vertical depth by means of a short vertical drop adjacent to the stack [see Table 6.6.3.2 and Figure 6.6.3.2(b)].

9.5.8 Floor waste gullies

Floor waste gullies shall be installed in accordance with Clause 4.6.7.

9.5.9 Traps

Traps shall be installed in accordance with Clause 6.4.

9.5.10 Connection of ranges of fixtures

A range of fixtures of the same type in commercial buildings may discharge through a common discharge pipe without venting. The junction at the point of connection between a fixture discharge pipe and the common discharge pipe shall be a 45° or sweep junction.

9.5.11 Ranges of basins

9.5.11.1 *General*

The maximum number of basins shall be five, as given in Figure 9.5.11.1.

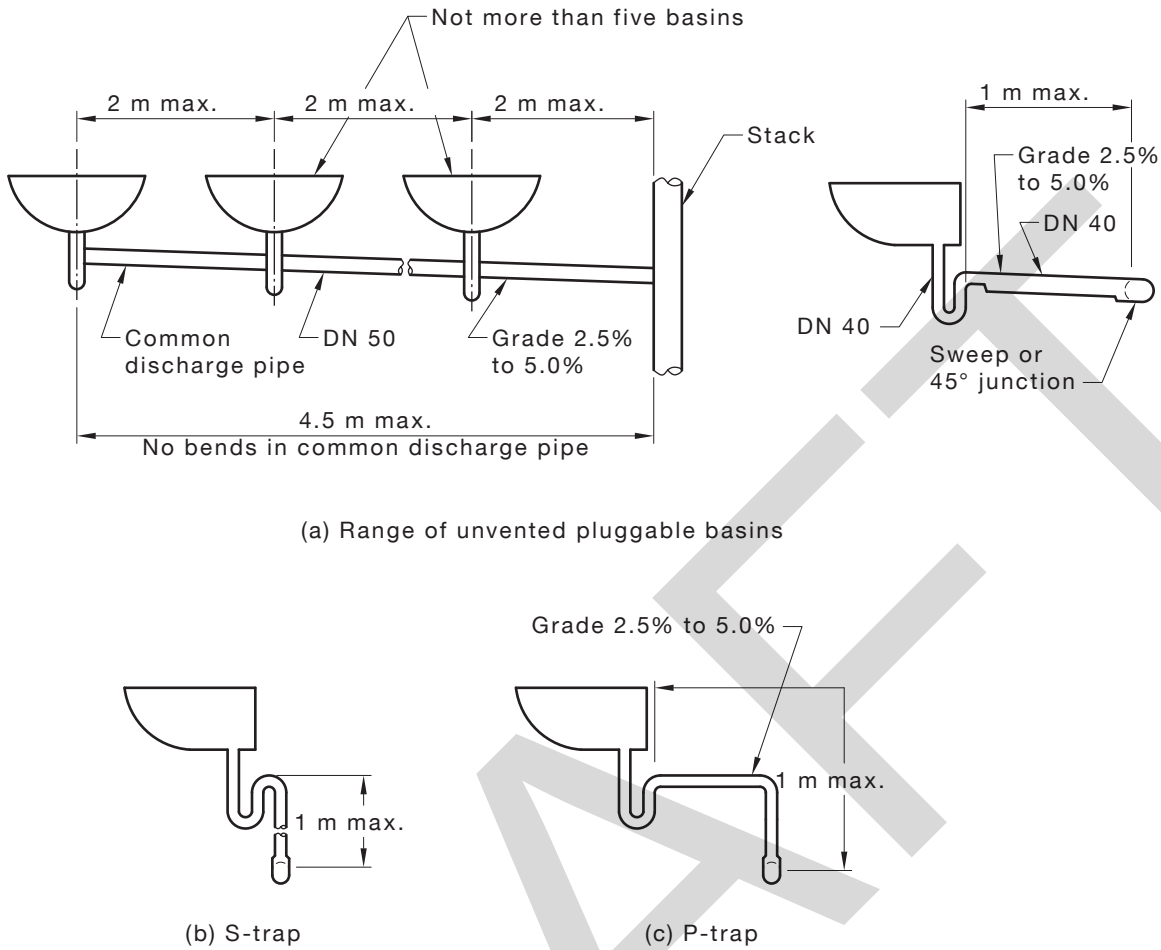

FIGURE 9.5.11.1 CONNECTION OF BASINS

9.5.11.2 *Fixture discharge pipe*

The fixture discharge pipe from each basin to the point of connection to the common discharge pipe shall be—

(a) DN 40;

(b) not longer than 1 m;

(c) installed with not more than one bend; and

(d) graded within the range of 2.5% to 5%.

9.5.11.3 *Common discharge pipe*

The common discharge pipe shall be—

(a) not smaller than DN 50;

(b) not longer than 4.5 m;

(c) installed without a bend; and

(d) graded within the range of 2.5% to 5%.

9.5.11.4 *Spacing of traps*

The distance between the centre-lines of adjacent traps and between the near face of the stack and the centre-line of the nearest trap shall not exceed 2 m.

9.5.12 Range of water closet pans

9.5.12.1 *General*

The maximum number of water closet pans shall be five, as shown in Figure 9.5.12.1.

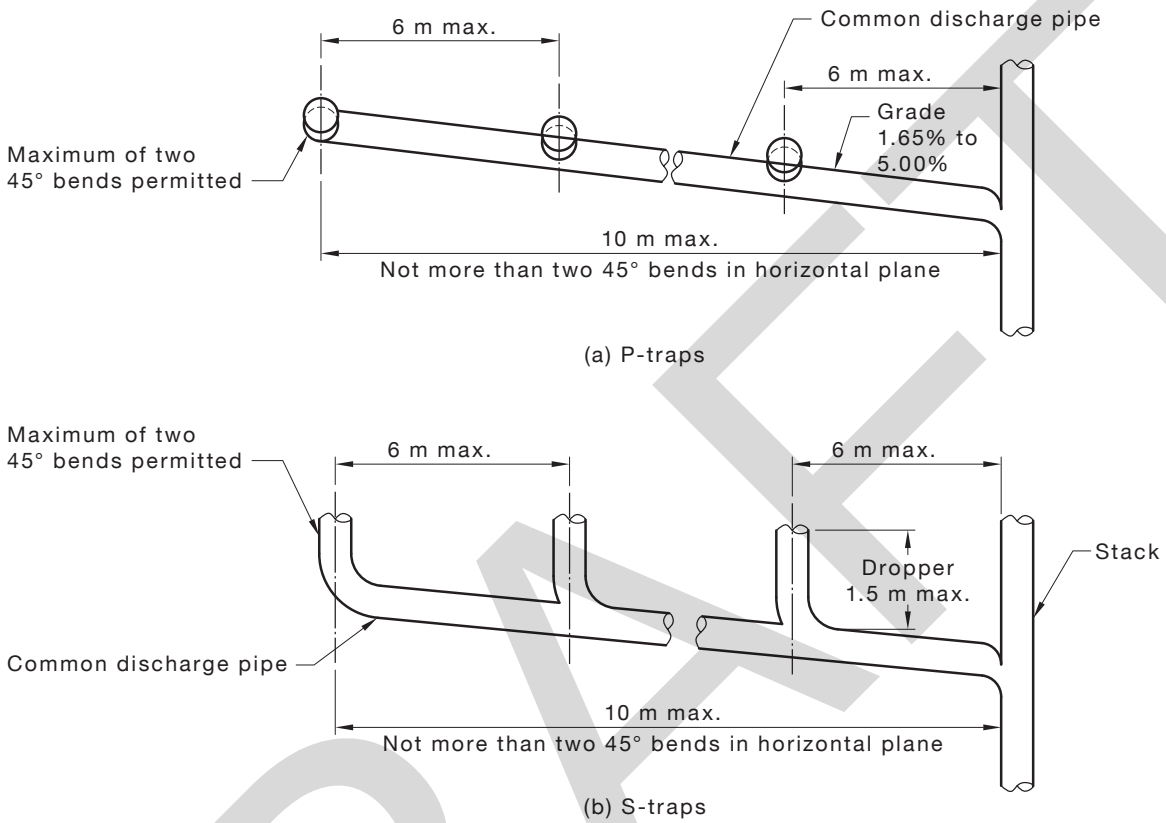

FIGURE 9.5.12.1 CONNECTION OF WATER CLOSET PANS

9.5.12.2 *Fixture discharge pipe*

The fixture discharge pipe from each water closet pan to the point of connection to the common discharge pipe shall be—

(a) not longer than 1.5 m for S-trap pans and 2 m for P-trap pans;

(b) installed with a maximum of two bends; and

(c) graded within the range of 1.65% to 5%.

9.5.12.3 *Common discharge pipes*

The common discharge pipe shall be—

(a) not smaller than DN 100;

(b) not longer than 10 m;

(c) installed with not more than two bends; and

(d) graded within the range of 1.65% to 5%.

9.5.12.4 *Spacing of traps*

The distance between the centre-lines of adjacent traps and the near face of the stack and the centre-line of the nearest connected trap shall not exceed 6 m.

9.5.13 Range of wall-hung urinals

9.5.13.1 *General*

The maximum number of wall-hung urinals shall be five, as shown in Figure 9.5.13.1.

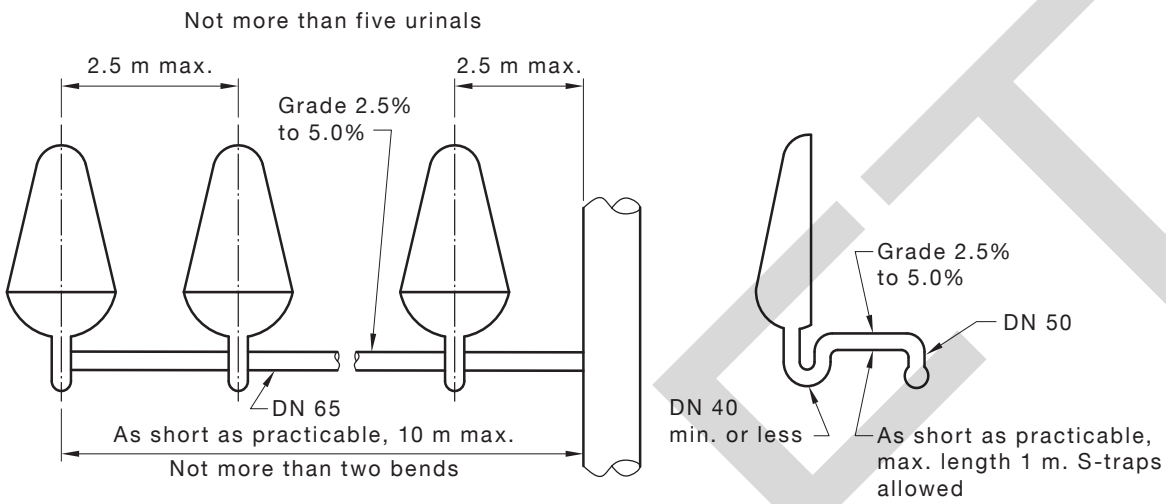

FIGURE 9.5.13.1 CONNECTION OF WALL-HUNG URINALS

9.5.13.2 *Fixture discharge pipe*

The discharge pipe from each urinal to the point of connection to the common discharge pipe shall be—

(a) DN 50;

(b) not longer than 1 m;

(c) installed with not more than one bend; and

(d) graded within the range of 2.5% to 5%.

9.5.13.3 *Common discharge pipe*

The common discharge pipe shall be—

(a) not smaller than DN 65;

(b) not longer than 10 m;

(c) installed with not more than two bends; and

(d) graded within the range of 2.5% to 5%.

9.5.13.4 *Spacing of traps*

The distance between the centre-lines of adjacent traps and the near face of the stack and the centre-line of the nearest connected trap shall not exceed 2.5 m.

9.6 VENTING OF STACKS

9.6.1 General

The stack shall continue to the vent cowl undiminished in size.

Stacks that extend not more than three floor levels with a maximum loading of 30 fixture units may have the vent reduced to DN 50.

9.6.2 Cross-vents (single stack modified system)

9.6.2.1 *General*

Cross-vents shall interconnect the stack with the relief vent. Cross-vents shall be installed commencing on the lowest floor level served and then from other floors as given in Table 9.7.2(A) or Table 9.7.2(B) as applicable.

NOTE: A cross-vent need not be fitted above the highest fixture connected to the stack.

9.6.2.2 *Installation*

The following applies to cross-vents:

(a) The cross-vent shall connect to the stack at a height of not less than 50 mm or more than 600 mm above the flood level rim of the highest fixture connected to the stack at the floor concerned. The connection between the cross-vent and stack shall be at an angle of entry of 45°, and the cross-vent shall be extended upwards at 45° to the point of connection with the relief vent.

(b) The cross-vent may be omitted, provided a vent is connected to the highest graded pipe that receives the discharge from a water closet pan at the floor concerned, at a point that is as close to the stack as is practicable. The vent shall be connected to the soffit of the graded pipe, and shall be extended upwards to a height of not less than 50 mm above the flood level rim of the water closet pan served, before interconnecting with the relief vent.

(c) Where there is no water closet pan connected at the floor concerned, the vent shall connect into the highest graded pipe on that floor, provided the graded pipe is not less than DN 80 at the point of connection to the vent.

(d) Changes of direction and junctions or connections shall be made using methods detailed in this Standard.

9.6.3 Relief vents (single stack modified system)

Relief vents shall be installed in accordance with Clause 8.5.3.

9.7 SIZING OF STACKS

9.7.1 Single stack systems

Stacks shall be sized using the individual fixture unit ratings as given in Table 6.2(A), and shall be as given in Table 9.7.1(A) or Table 9.7.2(B), as appropriate.

TABLE 9.7.1(A)

SINGLE STACK SYSTEMS—DOMESTIC OR RESIDENTIAL BUILDINGS

Size of stack DN	Maximum fixture unit loading	Maximum number of consecutive floor levels
100	260	10
125	390	15
150	780	30

NOTE: See Figure 9.2.2(a).

TABLE 9.7.1(B)

SINGLE STACK SYSTEMS—COMMERCIAL OR INDUSTRIAL BUILDINGS

Size of stack DN	Maximum fixture unit loading	Maximum number of consecutive floor levels
100	60	4
125	100	6
150	200	8

NOTE: See Figure 9.2.2(b).

9.7.2 Single stack modified systems

Stacks shall be sized using the individual fixture unit ratings as specified in Table 6.2(A), and shall be as given in Table 9.7.2(A) or Table 9.7.2(B), as appropriate.

TABLE 9.7.2(A)

SINGLE STACK MODIFIED SYSTEMS—DOMESTIC OR RESIDENTIAL BUILDINGS

Size of stack DN	Maximum fixture unit loading	Number of consecutive floor levels	Size of relief vent and cross-vent DN	Location of cross-vents
100	290	up to 15	50	Alternate floors
100	390	up to 15	50	Each floor
100	320	16 to 20	65	Alternate floors
100	500	16 to 20	65	Each floor

NOTE: See Figure 9.2.3(a).

TABLE 9.7.2(B)

SINGLE STACK MODIFIED SYSTEMS—OTHER THAN RESIDENTIAL TYPE BUILDINGS

Size of stack DN	Maximum fixture unit loading	Number of consecutive floor levels	Size of relief vent and cross-vent	Location of cross-vents
100	120	5 to 12	50	Each floor
125	250	13 to 18	65	Each floor
150	600	19 to 24	80	Each floor

NOTE: See Figure 9.2.3(b).

9.8 VARIATIONS TO SINGLE STACK SYSTEMS

9.8.1 General

The following variations to the requirements of this Section may be used:

NOTE: The variations are actual installations that have been subjected to performance testing.

(a) A DN 80 stack up to three floors in height for domestic or residential buildings may have variations as detailed in Clause 9.8.2.

(b) A DN 80 stack up to two floors in height with top section graded (nominally horizontal) may have variations as detailed in Clause 9.8.3.

(c) A DN 100 stack up to three floors in height with top section graded (nominally horizontal), receiving a maximum discharge of 30 fixture units, may have variations as detailed in Clause 9.8.4.

(d) A DN 100 stack of one floor in height with top section graded (nominally horizontal), receiving a maximum discharge of 90 fixture units, may have variations as detailed in Clause 9.8.5.

(e) Connection of multiple fixtures located on the floor above a graded offset to a common branch pipe, which connects into or below the offset in a stack of not less than DN 100, may be applied with Clause 9.8.6.

(f) A waste stack up to DN 100, with graded offset between the highest and lowest connections, may have variations as detailed in Clause 9.8.7.

(g) A DN 65 waste stack up to two floors in height, receiving the discharge from kitchen sinks and laundry troughs, may have variations as detailed in Clause 9.8.8.

(h) Connection of waste fixtures to DN 50 stack vent in DN 80 and DN 100 stacks may be applied with Clause 9.8.9.

Trap vent required on fixtures, connected at the change of direction in a DN 80 or DN 100 stack with top section nominally horizontal, shall be installed in accordance with Clause 9.8.10.

In areas where foaming is likely to occur, the minimum distance at or near the offsets may need to be increased.

9.8.2 DN 80 stack

A stack of DN 80, serving not more than three floor levels in domestic or residential buildings, may receive discharge pipes provided the installation conforms with the following:

(a) The stack shall not exceed three floor levels in height measured between the base of the stack and the highest floor level upon which a fixture is connected to the stack.

(b) The stack loading shall not exceed 30 fixture units.

(c) Not more than one fixture of each of the following types listed shall discharge into the stack at each floor level:

  (i) Basin.

  (ii) Bath.

  (iii) Dishwashing machine.

  (iv) Kitchen sink.

  (v) Shower.

(d) A laundry trough or clothes-washing machine shall not be connected to the stack.

(e) Each fixture shall discharge into the stack by means of an individual fixture discharge pipe.

(f) The stack shall be straight between the discharge pipe of the highest fixture connected and the drain, and have no offset or other deviation from the vertical.

(g) The graded section of the drain to which the base of the stack connects shall be not smaller than DN 100.

(h) Offsets shall only be installed in the stack vent above the highest branch connection to the stack.

NOTE: The offsets should preferably be greater than 45° (steep offsets).

9.8.3 DN 80 stack with the top section graded and installed in a domestic or residential building

A stack of DN 80, serving not more than two floor levels with the top section graded nominally horizontal, may receive the discharge from fixtures without vents on the fixture discharge pipes, provided the installation conforms with the following:

(a) Fixtures shall discharge to the graded section by means of an individual fixture discharge pipe.

(b) Not more than one of each of the following fixtures shall discharge to the graded section:

  (i) Bath.

  (ii) Basin.

  (iii) Dishwashing machines.

  (iv) Kitchen sink.

  (v) Shower.

(c) A laundry trough or clothes-washing machine shall not be connected to the stack.

(d) Fixtures shall not be connected to the lower vertical section of the stack.

(e) The connection of a fixture discharge pipe to the graded section of a stack shall be not less than 450 mm from the lower vertical section of the stack, measured from the inlet of the lower bend commencing the graded section.

The graded section of the stack may be reduced in size along its length towards the vent, according to the size of individual fixture discharge pipes connected to it.

In no case shall the graded section or vent be smaller than DN 50.

NOTE: For typical DN 80 stack with the top section graded and installed in a domestic or residential building, see Figure 9.8.3.

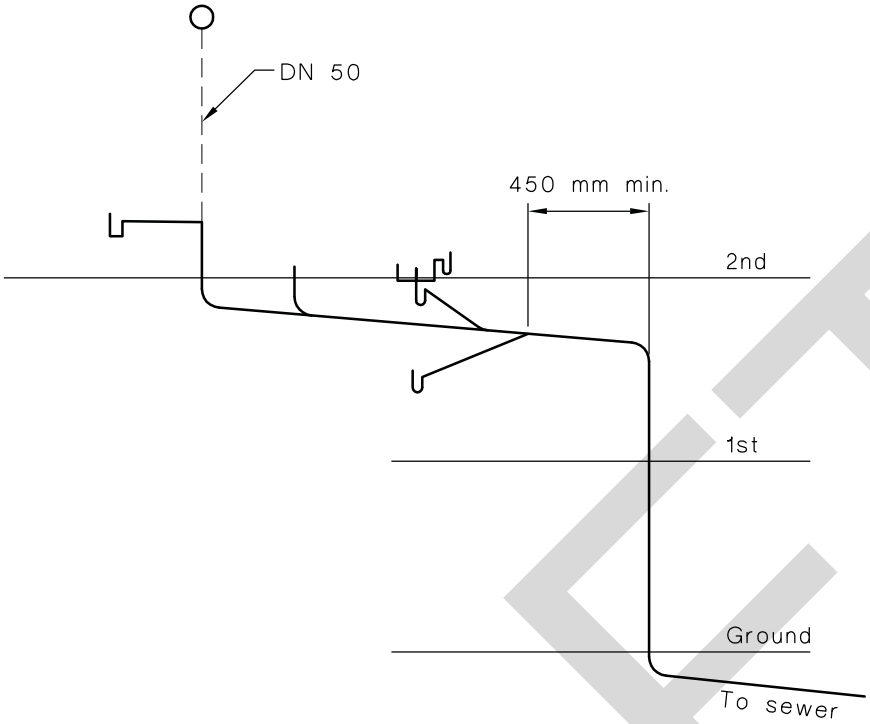

FIGURE 9.8.3 TYPICAL DN 80 STACK UP TO TWO FLOOR LEVELS WITH TOPMOST SECTION NOMINALLY HORIZONTAL

9.8.4 DN 100 stack up to three floors with the top section graded and installed in a domestic or residential building receiving 30 fixture units

A stack of DN 100, serving not more than three floor levels with the top section graded nominally horizontal in a domestic or residential building, may receive the discharge from fixtures without vents on the fixture discharge pipes, provided the installation conforms with the following:

(a) Fixtures shall discharge to the graded section by means of individual fixture discharge pipes.

(b) The stack shall not exceed three floor levels in height and the stack loading shall not exceed 30 fixture units.

(c) The connection of a fixture discharge pipe to the graded section of the stack shall be not less than 450 mm from the lower vertical section of the stack, measured from the inlet of the lower bend commencing the graded section.

The graded section of the stack may be reduced in size along its length towards the vent according to the size of the individual fixture discharge pipe connected to it.

In no case shall the graded section or vent be smaller than DN 50.

NOTE: For a DN 100 stack up to three floors with the top section graded and installed in a domestic or residential building receiving 30 fixture units, see Figure 9.8.4.

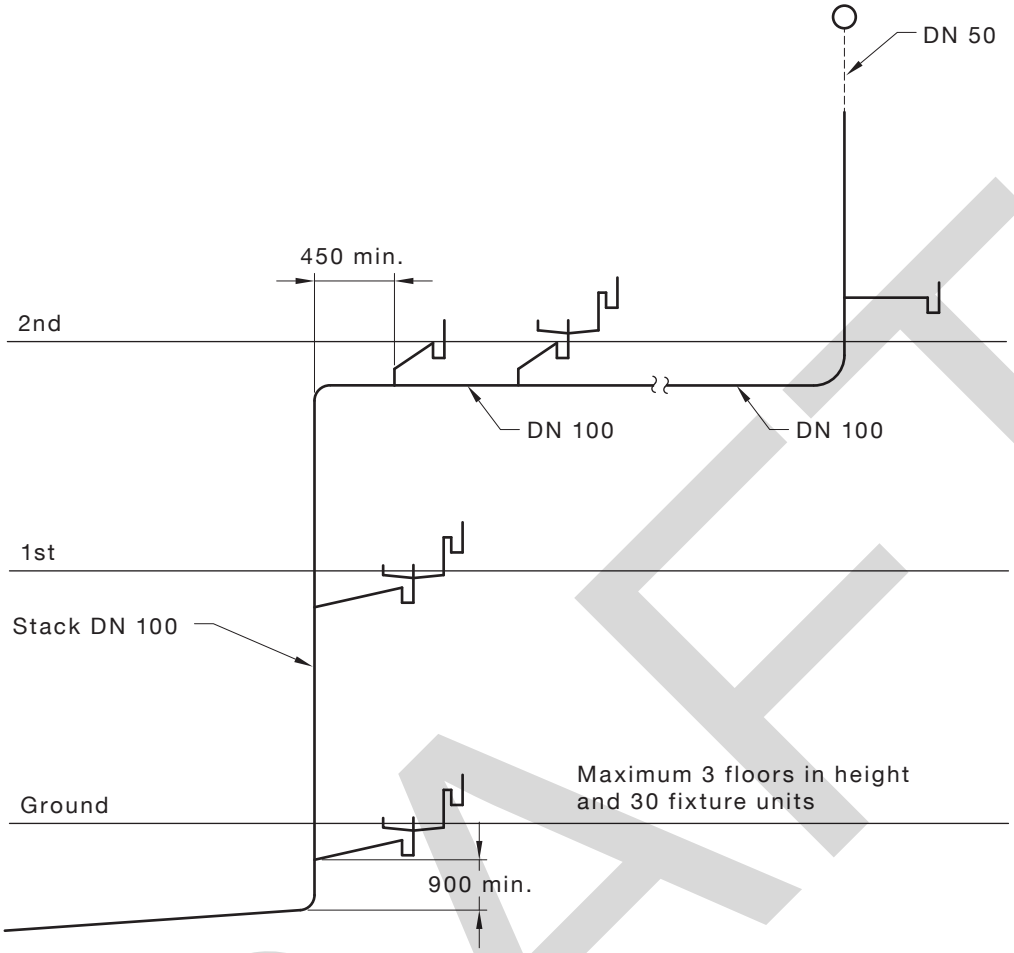

NOTE: Size of graded section may vary to a minimum DN 50.

DIMENSIONS IN MILLIMETRES

FIGURE 9.8.4 TYPICAL DN 100 STACK WITH TOPMOST SECTION NOMINALLY HORIZONTAL

9.8.5 DN 100 stack of one floor with top section graded

A stack of DN 100 serving the first floor above ground level in a domestic or residential building may receive the discharge from fixtures without vents on the fixture discharge pipes, provided the installation conforms with the following:

(a) Fixtures shall discharge to the graded section by means of individual fixture discharge pipes.

NOTE: See also Table 9.5.1.

(b) The stack loading shall not exceed 90 fixture units.

(c) The connection of a fixture discharge pipe to the graded section of the stack shall be not less than 450 mm from the lower vertical section of the stack, measured from the inlet of the lower bend commencing the graded section.

(d) Branches shall not be connected to the vertical sections of the stack within 600 mm below the lower bend forming part of the offset. The graded section of the stack may be reduced in size along its length towards the vent, according to the size of individual fixture discharge pipes connected to it. In no case shall the graded section or vent be smaller than DN 50.

NOTE: For a typical DN 100 stack of one floor with top section graded, see Figure 9.8.5.

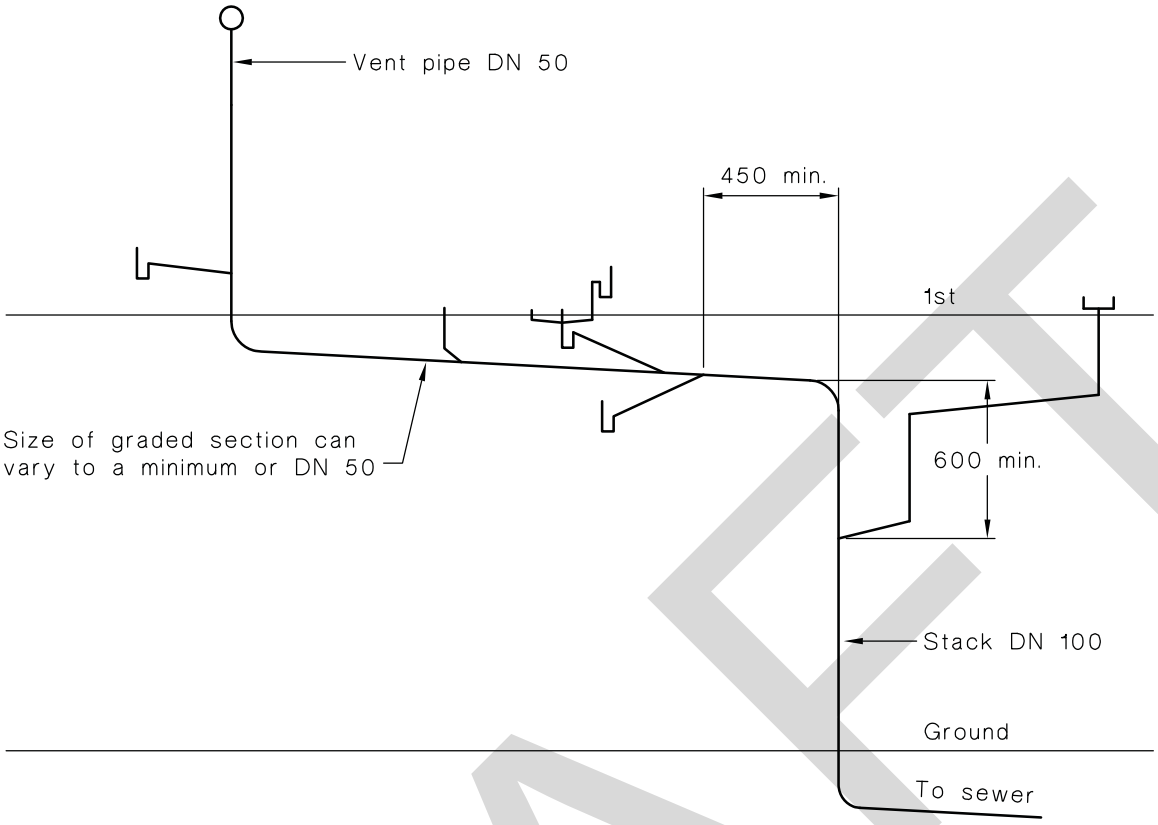

DIMENSIONS IN MILLIMETRES

FIGURE 9.8.5 TYPICAL DN 100 STACK WITH TOPMOST SECTION NOMINALLY HORIZONTAL FOR ONE FLOOR—90 FIXTURE UNITS

9.8.6 Connection for multiple fixtures into or below a graded offset (DN 100 stacks)

Multiple fixtures located on the floor above a graded offset may be connected by means of a common discharge pipe into or below the graded section of the offset in accordance with Clause 8.6.2, provided the stack to which the branch pipe connects does not exceed—

(a) five floors above the graded offset with a maximum loading of 90 fixture units; or

(b) three floors above the graded offset with a maximum loading of 45 fixture units.

NOTE: For a diagram of the above, see Figure 9.8.6.

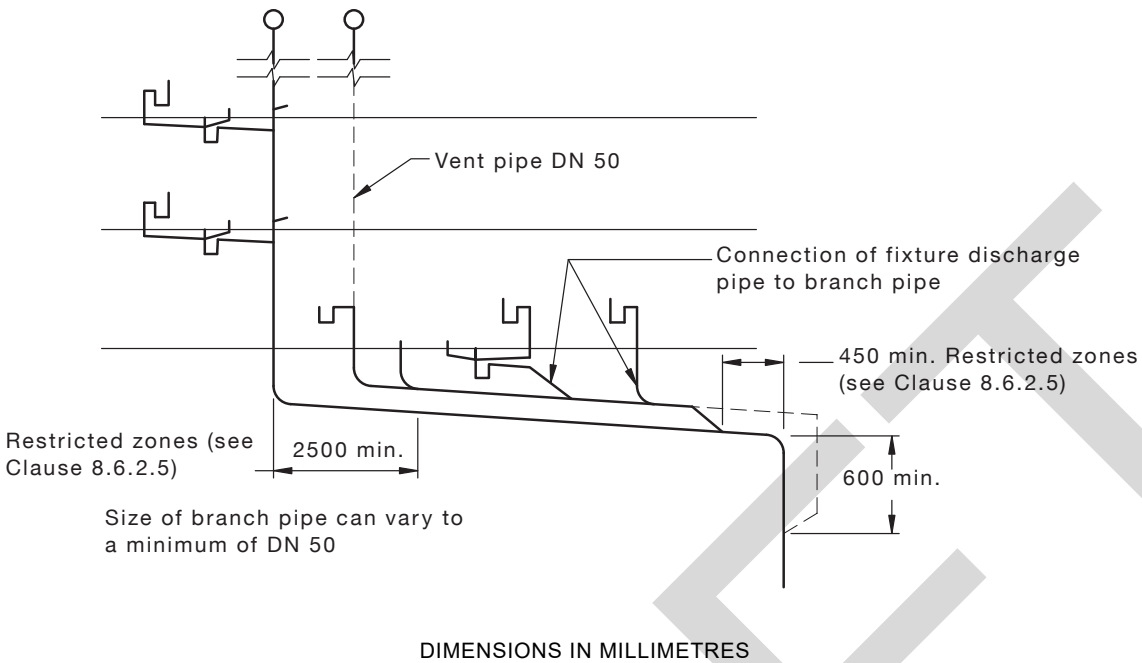

FIGURE 9.8.6 MULTIPLE FIXTURE BRANCH

9.8.7 Waste stack up to DN 100 with either graded or steep offset between the highest and lowest connections

9.8.7.1 *Graded offsets*

A waste stack up to DN 100 may have graded offsets installed between the highest and lowest graded pipes, provided the following requirements are met:

(a) The maximum fixture unit loading to discharge through the graded section of the offset shall be as given in Table 9.8.7.1(A).

(b) The distance between the centre-lines of the vertical sections of a stack each side of the graded offset shall be not less than 1 m.

(c) For stacks DN 80 or smaller, no branch shall connect to the stack within 900 mm above the upper offset bend.

A DN 80 stack with offset may have the minimum vertical distance of 900 mm reduced to 600 mm, provided the height between the highest connection to the stack and the upper offset bend does not exceed three floor levels.

(d) For DN 100 stacks only, the connection near the upper offset bend shall be in accordance with Table 9.8.7.1(B).

(e) Where connections are made to the stack below the offset, the size of the offset and the stack above the offset and up to the vent cowl shall be as determined from Table 9.8.7.1(A). The fixture unit loading for the complete stack shall be determined from Table 9.5.2. The stack size shall be the greater value, determined from Tables 9.5.2 and 9.8.7.1(A).

(f) Branches shall not connect to the vertical sections of the stack within 600 mm below the lower bend forming part of the offset.

(g) Where no connections are made to the stack below the offset, the maximum fixture unit loading to discharge through the offset shall be as given in Table 9.5.2 for the upper vertical section and the offset shall be increased to the next larger size.

(h) The connection of multiple fixtures into the offset shall be in accordance with Clause 9.8.6.

(i) Where unvented fixtures are connected into the graded section, the fixture discharge pipe shall conform with Table 9.5.1.

(j) Where a common discharge pipe is connected into the stack, and a relief vent and cross-vents are installed, the fixture loading discharging to the stack shall be as given in Table 8.2.2(B).

NOTE: For a typical example of waste stack up to DN 100 with graded offset between the highest and lowest connections, see Figure 9.8.7.1.

TABLE 9.8.7.1(A)

WASTE STACKS—LOADING THROUGH GRADED OFFSETS

Size of graded section of offset DN	Maximum fixture unit loading permitted through the offset
40	1
50	3
65	8
80	24
100	60

TABLE 9.8.7.1(B)

OFFSET REQUIREMENTS FOR DN 100 WASTE STACKS

Max. height in consecutive floor levels above upper offset bend	Min. distance between upper offset bend and connection of fixture and discharge pipe mm	Max. fixture unit loading (see Table 9.9.3)
5	450	60
10	600	60

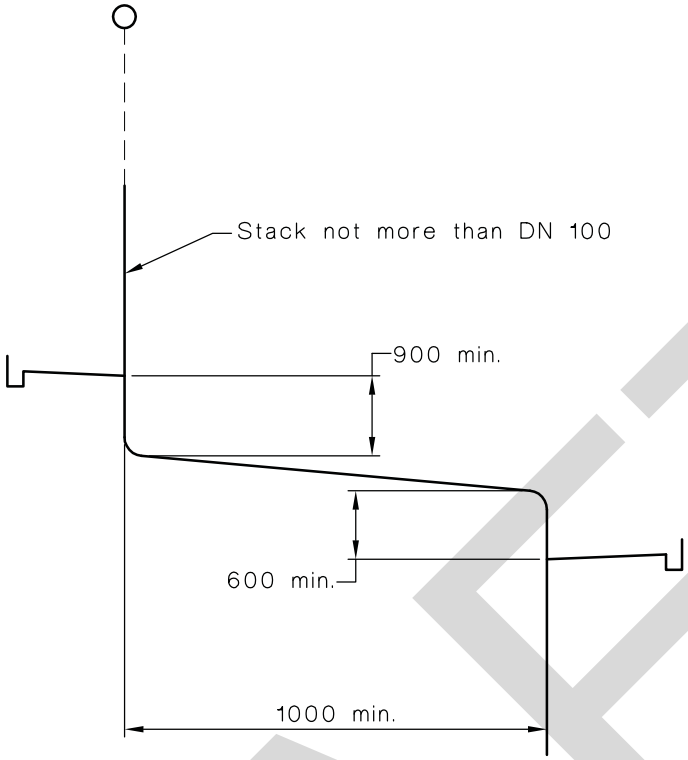

NOTE: For fixture units discharging through graded section, see Table 9.8.7.1(A).

DIMENSIONS IN MILLIMETRES

FIGURE 9.8.7.1 TYPICAL WASTE STACK UP TO DN 100 WITH GRADED OFFSET BETWEEN THE HIGHEST AND LOWEST CONNECTIONS

9.8.7.2 *Steep offsets*

A waste stack of up to DN 100 may have steep offsets between the highest and lowest graded pipes connected, provided the following requirements are met:

(a) Where the fixtures are unvented in accordance with Item (g), the maximum fixture unit loading to discharge to the stack shall not exceed 120 fixture units.

(b) Steep offsets of 60° or more to the horizontal shall have no connections made above the offset within—

(i) 450 mm of the upper bend, when the stack extends through five floors or less above the offset; or

(ii) 600 mm of the upper bend, when the stack extends through more than five floors above the offset.

(c) Steep offsets of less than 60° to the horizontal shall have no connections made above the offset within 150 mm of the upper bend for stacks of any height.

(d) Steep offsets of less than 60° to the horizontal shall have no connections made into the offset within—

(i) 2.5 m of the upper bend; or

(ii) 450 mm of the lower bend.

(e) Steep offsets of 60° or more to the horizontal shall have no restrictions within the offset, provided any such connection is made using a 45° or sweep junction.

(f) Steep offsets shall have no connections made below the offset within 600 mm of the lower bend.

(g) Where unvented single waste fixture discharge pipes are connected into the stack, the maximum length shall be in accordance with Table 9.5.1.

(h) Where a common discharge pipe is connected into the stack and a relief vent is installed, the fixture unit loading discharging to the stack shall be in accordance with Table 8.2.2(B).

9.8.8 DN 65 waste stack

A waste stack of DN 65 may receive the discharge from kitchen sinks and laundry troughs provided—

(a) the stack does not exceed two floor levels in height measured between the base of the stack and the highest floor level upon which a fixture is connected; and

(b) not more than two kitchen sinks, or one kitchen sink and one laundry trough, are separately connected at each floor level.

9.8.9 DN 50 vertical section of stack

Three waste fixtures only, being basins, showers or kitchen sinks, may be connected to the top DN 50 vertical section of a stack not more than three floor levels in height with a maximum loading of 30 fixture units.

NOTE: For a typical connection of a DN 50 vertical section of stack, see Figure 9.8.9.

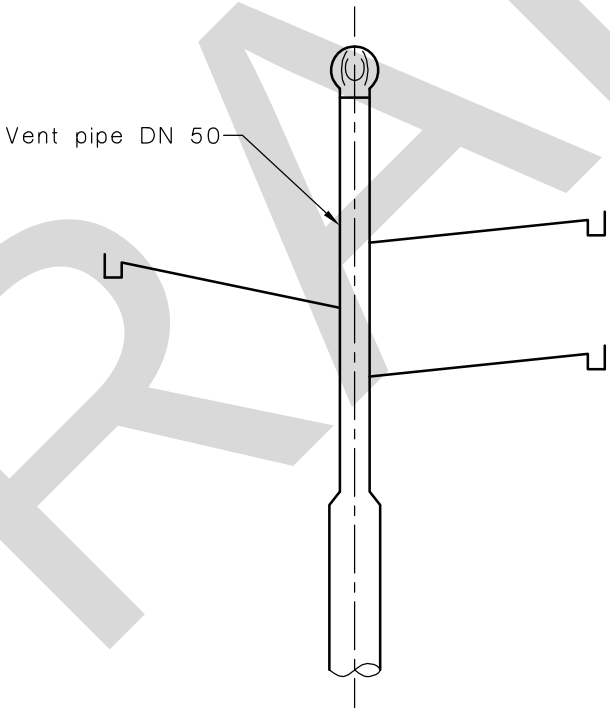

FIGURE 9.8.9 TYPICAL CONNECTION OF WASTE FIXTURES TO A DN 50 VERTICAL SECTION OF STACK

9.8.10 Connection at the change of direction in stack with top section graded

Where a DN 80 or DN 100 stack has the top section nominally horizontal, a trap vent or air admittance valve shall be required on a fixture discharge pipe that connects to the stack at the point at which the top graded section joins the vertical section of the stack.

NOTE: For a typical venting for fixture connected at change of direction in DN 80 or DN 100 stack, see Figure 9.8.10.

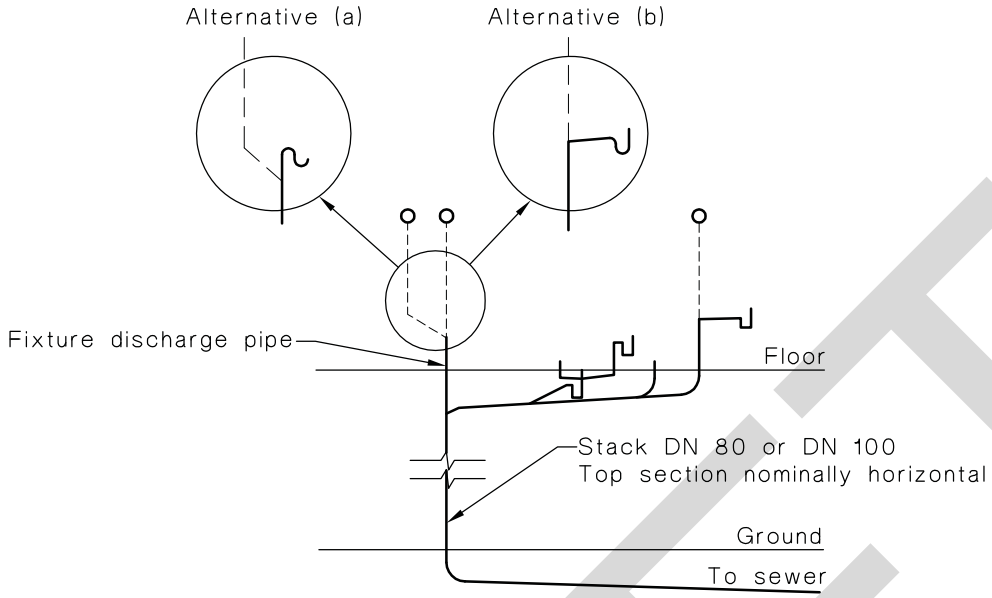

FIGURE 9.8.10 TYPICAL VENTING FOR FIXTURE CONNECTED AT CHANGE OF DIRECTION IN DN 80 OR DN 100 STACKS

9.9 OFFSETS IN SINGLE STACK SYSTEMS ONLY

9.9.1 General

Offsets may be used in single stack design. An offset may be either—

(a) a steep offset made at an angle of 45° to the horizontal or greater; or

(b) a graded offset made at an angle of less than 45° to the horizontal, the minimum grade which shall be 2.5% for waste stacks of DN 80 or smaller and 1.65% for stacks of DN 100 or larger.

9.9.2 Steep offsets

DN 100 stacks may be offset between the base of the stack and the highest connection in accordance with the following:

(a) The height of the stack shall not exceed 10 consecutive floor levels.

(b) Laundry troughs shall only be connected to the stack as specified in Clause 9.9.3, except as provided in Clause 9.9.4.

(c) Connections near the upper and lower offset bends and the maximum fixture unit loading to the stack shall be in accordance with Table 9.9.2, except as provided in Clause 9.9.4.

(d) The minimum distance between the connection of any fixture discharge pipe and the upper offset bend shall be no less than 100 mm, as shown in Figure 9.9.2(B).

NOTE: A typical steep offset is depicted in Figure 9.9.2(A).

TABLE 9.9.2

OFFSET REQUIREMENTS

Maximum height in consecutive floor levels above upper offset bend	Minimum distance between upper offset bend and connection of fixture discharge pipe mm	Minimum distance between lower offset bend and connection of fixture discharge pipe mm	Maximum fixture unit loading
5	450	600	90
10	600	600	150
10	900	600	260

NOTE: See also Table 9.9.3 for laundry troughs.

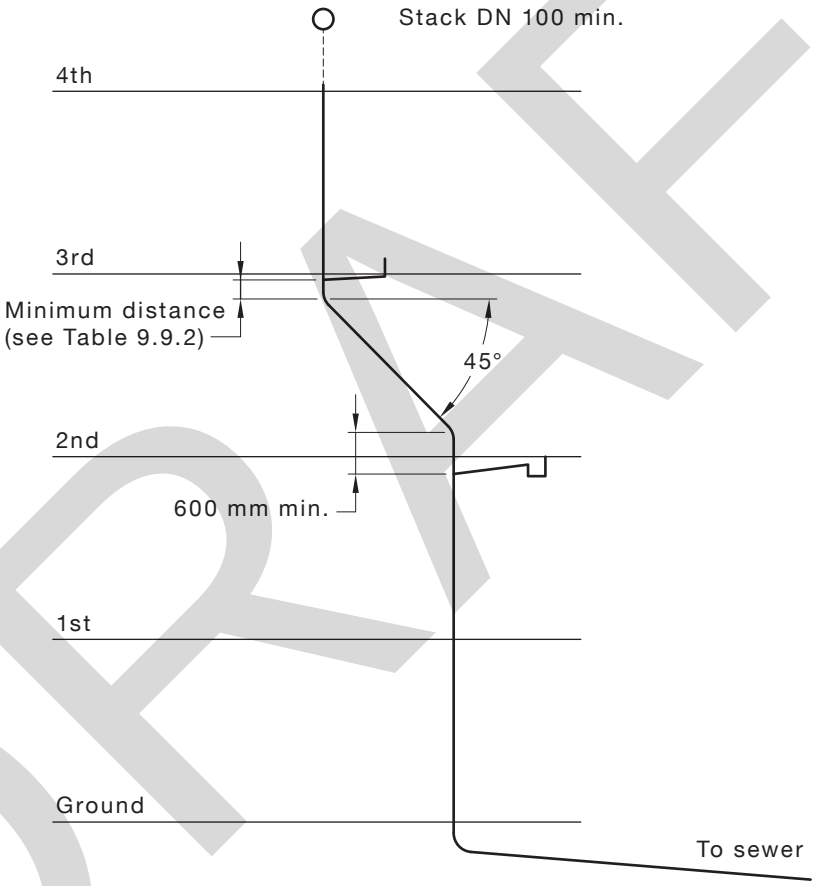

FIGURE 9.9.2(A) TYPICAL STEEP OFFSET

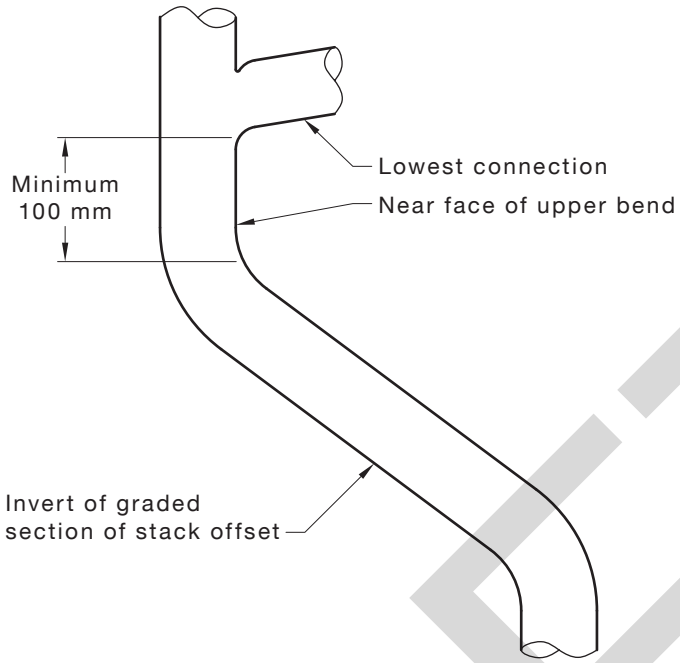

NOTE: Measurement increases with height of stack above offset and fixture unit loading.

FIGURE 9.9.2(B) NEAR FACE MEASUREMENT

9.9.3 Connection of laundry troughs to DN 100 stacks

Laundry troughs may be connected into either the upper or lower vertical section of a steep offset stack.

Laundry troughs shall be connected only to the upper section of a DN 100 stack in accordance with Table 9.9.3.

TABLE 9.9.3

OFFSET REQUIREMENTS FOR LAUNDRY TROUGHS

Maximum height in consecutive floor levels above upper offset bend	Minimum distance between upper offset bend and connection of fixture discharge pipe mm	Maximum fixture unit loading
5	450	50
10	600	50

9.9.4 Steep offsets below the lowest connection

Where a steep offset is installed below the lowest connection to a stack of not less than DN 100, the minimum distance between the fixture connection and the upper offset bend shall be in accordance with Table 9.9.2. This distance may be reduced to 100 mm, provided the following requirements are met:

(a) The number of consecutive floor levels above the upper offset bend served by fixtures shall be three or less.

(b) The maximum loading shall not exceed 30 fixture units through the offset section.

(c) A laundry trough shall not be connected.

NOTE: For a typical steep offset below the lowest connection, see Figure 9.9.4.

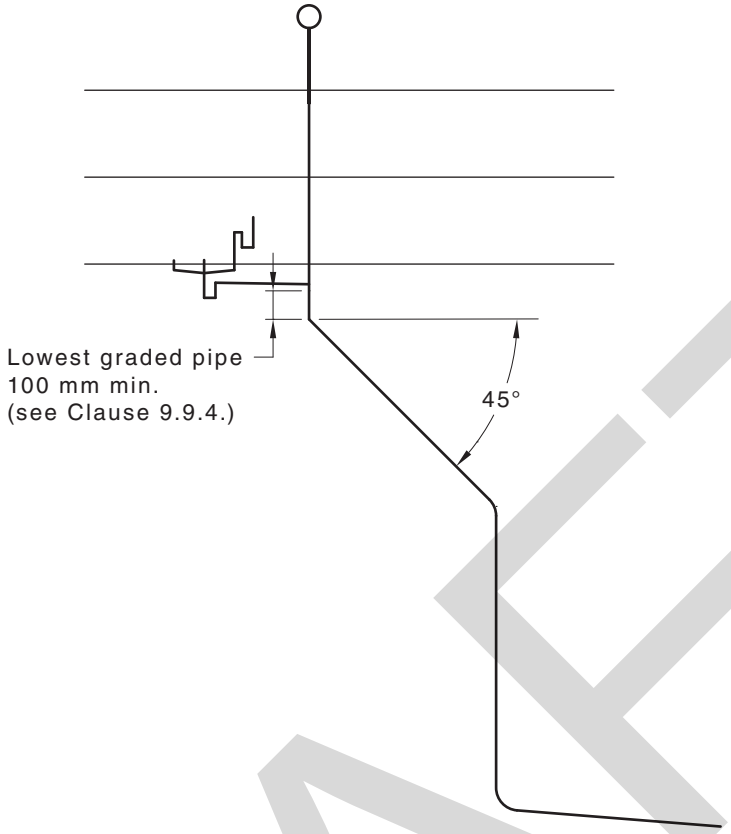

FIGURE 9.9.4 STEEP OFFSETS BELOW LOWEST CONNECTION

9.9.5 Graded offsets

DN 100 stacks may be offset between the base of the stack and the highest connection, provided the following requirements are met:

(a) Only one graded offset shall be installed in any stack.

(b) The height of the stack shall not exceed 10 consecutive floor levels.

(c) The minimum distance between the centre-lines of the vertical sections of the stack shall be 2 m.

(d) Fixtures shall be connected in accordance with Clause 8.6.2.

NOTE: For a typical graded offset, see Figure 9.9.5.

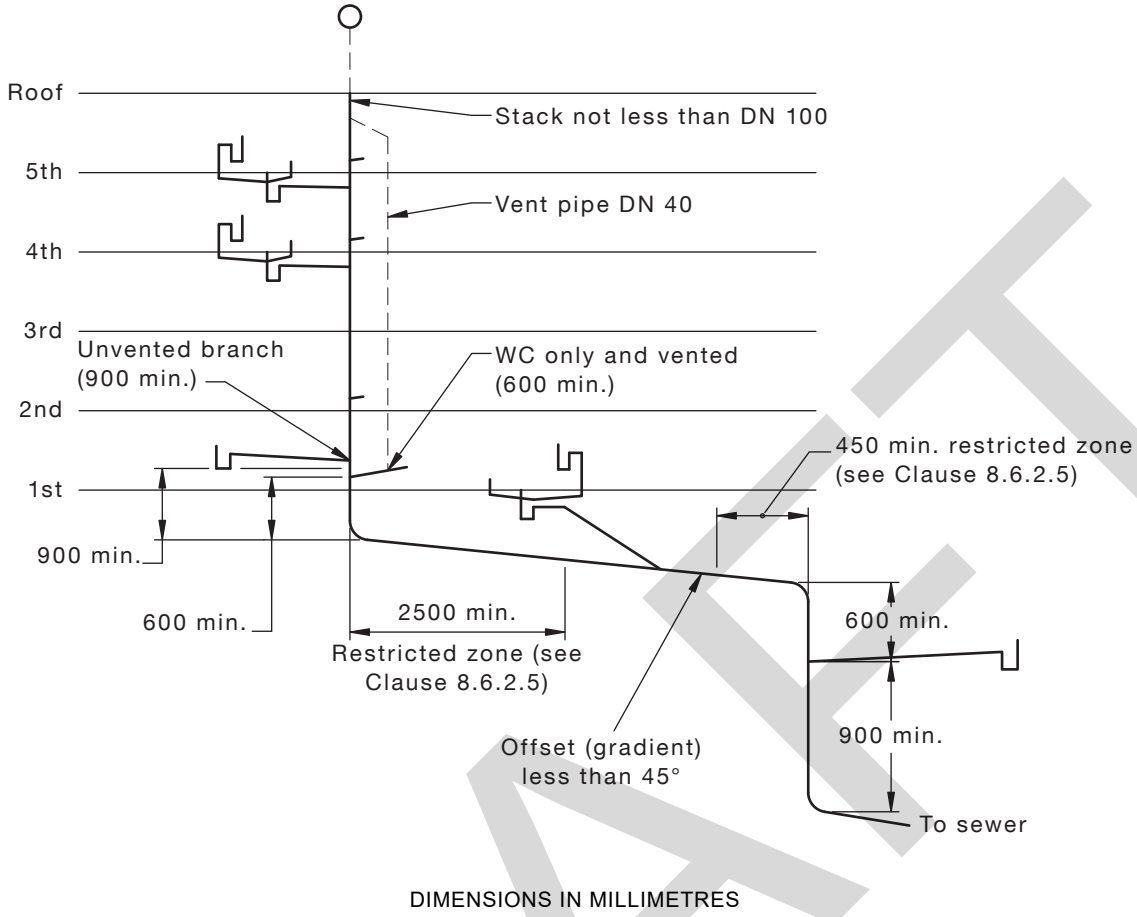

FIGURE 9.9.5 GRADED OFFSET

9.9.6 Connections above the offset

Where fixtures are connected into the upper vertical section, the following apply:

(a) The height of the vertical section of the stack above the upper offset bend shall not exceed five consecutive floor levels.

(b) The maximum loading shall not exceed 90 fixture units.

(c) No connection shall be made to the vertical section within 900 mm of the upper offset bend. Where a water closet pan is the lowest fixture connected, the distance may be reduced to 600 mm, provided the fixture discharge pipe from the water closet pan is fitted with a DN 40 trap vent (see Figure 9.9.5).

SECTION 10 GENERAL INSTALLATION OF PIPEWORK

10.1 SCOPE OF SECTION

This Section specifies requirements for the fixing, protection, spacing, and concealment of sanitary plumbing pipes and fittings.

NOTE: Installation of vacuum drainage pipework is covered in Section 16.

10.2 SUPPORT AND FIXING OF PIPEWORK

10.2.1 Brackets, clips and hangers

Brackets, clips and hangers shall be installed at the spacings specified in Table 10.2.1 and shall be—

(a) securely attached to the building structure and not to any other service;

(b) designed to withstand the applied loads;

(c) protected against corrosion where exposed to a corrosive environment;

(d) made from compatible materials;

(e) clamped securely to prevent movement, unless designed to allow for thermal movement;

(f) restrained to restrict lateral movement; and

(g) designed so that pipes and fittings are supported with minimal load being taken by the joints.

TABLE 10.2.1

MAXIMUM SPACING OF BRACKETS, CLIPS AND HANGERS

Pipework material	Maximum spacing of supports m	
	Vertical pipes	Graded pipes
Cast iron	3	3
Ductile iron	3	3
Copper, copper alloy	3	3
FRC	4	4
PVC-U DN 40–50	2	1
PVC-U DN 65–150	2.5	1.2
PVC-U DN > 150	3	1.5
PP	2	1
PE	2	1

10.2.2 Limitation of pipe supports

The following applies for the limitation of pipe supports:

(a) Pipes shall not be supported by brazing or welding short sections of any material to the pipe surface, nor by clamping, brazing or welding to adjacent pipes.

(b) Brackets, clips and hangers incorporating PVC shall not be used in contact with stainless steel pipes.

10.2.3 Holes in framework

Where holes are formed in the framework to accommodate pipework, they shall be sized to allow free longitudinal movement of the pipework without affecting the structural integrity of the framework.

10.3 LOCATION

Pipework shall be located—

(a) so that it does not interfere with the operation of any door, window, access opening or with any other aspects of the operation of a building;

(b) where it does not cause a nuisance or injury to persons;

(c) not directly above drinking water storage tanks;

(d) as close as practicable to the wall of any building or supporting structure;

(e) so that it is protected from mechanical damage;

(f) with clearance from other services in accordance with Clause 3.6.1; and

(g) when constructed of plastic—

  (i) at a minimum distance of 75 mm from an insulated heated water pipe or 150 mm from an uninsulated heated water pipe; and

  (ii) below a heated water pipe, at a minimum distance of 150 mm from an insulated heated water pipe or 300 mm from an uninsulated heated water pipe.

10.4 CONCEALMENT OF PIPES AND FITTINGS

10.4.1 General

Pipes and fittings installed in buildings may be concealed, provided inspection openings are accessible.

10.4.2 Extension of inspection openings

Inspection openings may be extended to a wall or slab surface, to facilitate ease of maintenance.

10.4.3 Structural concrete or brickwork

Pipework shall not be installed in any structural concrete slab, beam, column, concrete wall or loadbearing brickwork, unless specifically included in the design of the structural element.

10.4.4 Drywall construction

Pipework concealed in drywall construction shall not structurally interfere with the wall.

10.4.5 Multiple dwellings

Any discharge pipes that serve fixtures within only one dwelling in a domestic or residential building shall be located wholly within that dwelling.

10.4.6 Walk-in pipe ducts

Pipework concealed in walk-in pipe ducts shall be installed so that there is clear and adequate space remaining to facilitate access for any inspection.

10.5 TESTING AND INSPECTION OPENINGS

10.5.1 General

This Clause (10.5) applies to plumbing systems, including elevated pipework, using drainage principles.

NOTE: For sanitary drains, see Clause 4.7.

10.5.2 Location of testing and inspection openings

All common discharge pipes and stacks shall be provided with openings for inspection and testing in the following locations:

(a) In any common discharge pipe where necessary for inspection and testing.

(b) At the base of every stack.

(c) At any level of a stack where necessary for inspection and testing.

(d) At intervals not greater than 30 m in every common discharge pipe.

(e) At every junction fitting that connects a common discharge pipe to a stack, or in the upstream section of the common discharge pipe.

NOTES:

1 Inspection and testing openings may be raised to finished surface level and fitted with an airtight removable cap.

2 Where testing or inspection openings are located within a tenancy occupied by another party, consideration should be given to raising the inspection or testing opening into the tenancy that it serves.

10.5.3 Size of testing and inspection of openings

Testing and inspection openings shall have a minimum clear diameter in accordance with Table 10.5.3.

TABLE 10.5.3

TESTING AND INSPECTION OPENINGS MINIMUM CLEAR DIAMETER

Nominal size DN	Minimum clear diameter mm
40	24
50	29
65	60
80	75
100	100
150	150
175	150
225	150
300	150

10.5.4 Access to inspection openings

Every required inspection opening shall be accessible.

10.6 INSTALLATION OF COPPER AND COPPER ALLOY PIPES

10.6.1 General

Copper and copper alloy pipes shall be installed in accordance with AS 4809 and Clauses 10.6.2 to 10.6.4.

10.6.2 Fixing

Copper and copper alloy pipes shall be fixed in accordance with the following:

(a) All brackets other than at expansion joints, when fully tightened, shall permit longitudinal movement of the tubing.

(b) All brackets for use at expansion joints, when tightened evenly, shall securely clamp the expansion joint fitting and prevent movement.

(c) All brackets shall be lined with PVC or other compatible non-abrasive and inert material, for the part of the fastener that is in contact with the pipe.

10.6.3 Expansion joints

10.6.3.1 *General*

Expansion joints shall be provided for all copper and copper alloy pipes used for sanitary plumbing systems in accordance with Clauses 10.6.3.2, 10.6.3.3 and 10.6.3.4, as appropriate.

10.6.3.2 *Stacks*

Stacks shall be provided with expansion joints in accordance with the following:

(a) Where any stack extends through more than two floors whether above its base or above any offset bend, expansion joints shall be fixed—

  (i) at the base of the stack or in the vertical pipe above an offset bend; and

  (ii) at each alternate floor level when the stack is unrestrained in accordance with Clause 10.6.4, or at each floor level except the top floor when the stack is restrained or subjected to heated water discharges such as those from dishwashing machines.

(b) The expansion joint at any intermediate floor shall be placed immediately above the junction of the highest discharge pipe connected at the floor concerned.

10.6.3.3 *Graded discharge pipes*

Where graded discharge pipes are restrained and are more than 6 m in length, an expansion joint shall be installed in the graded pipe as close as practicable to the stack.

10.6.3.4 *Bedpan sanitizer and washer*

Where a bedpan sanitizer and washer are supplied with steam and connected to a soil stack, soil vent or steam relief vent, an expansion joint shall be installed at each floor in the soil stack, soil vent and steam-relief vent pipe.

10.6.4 Freedom from restraint

A copper or copper alloy pipe is considered to be unrestrained (see Figure 10.6.4), provided the following requirements are met:

(a) Where the pipe passes through walls or floors, there shall be no restraint on longitudinal movement. An annular space of at least 6 mm shall be provided, and such space may be filled with flexible material.

(b) There shall be no restraint on movement on any branch discharge pipe for a distance of 450 mm from its junction with a stack. Where the discharge pipe traverses any floor or wall within such a distance, an annular space of at least 6 mm shall be provided.

NOTE: The annular space may be filled with flexible material.

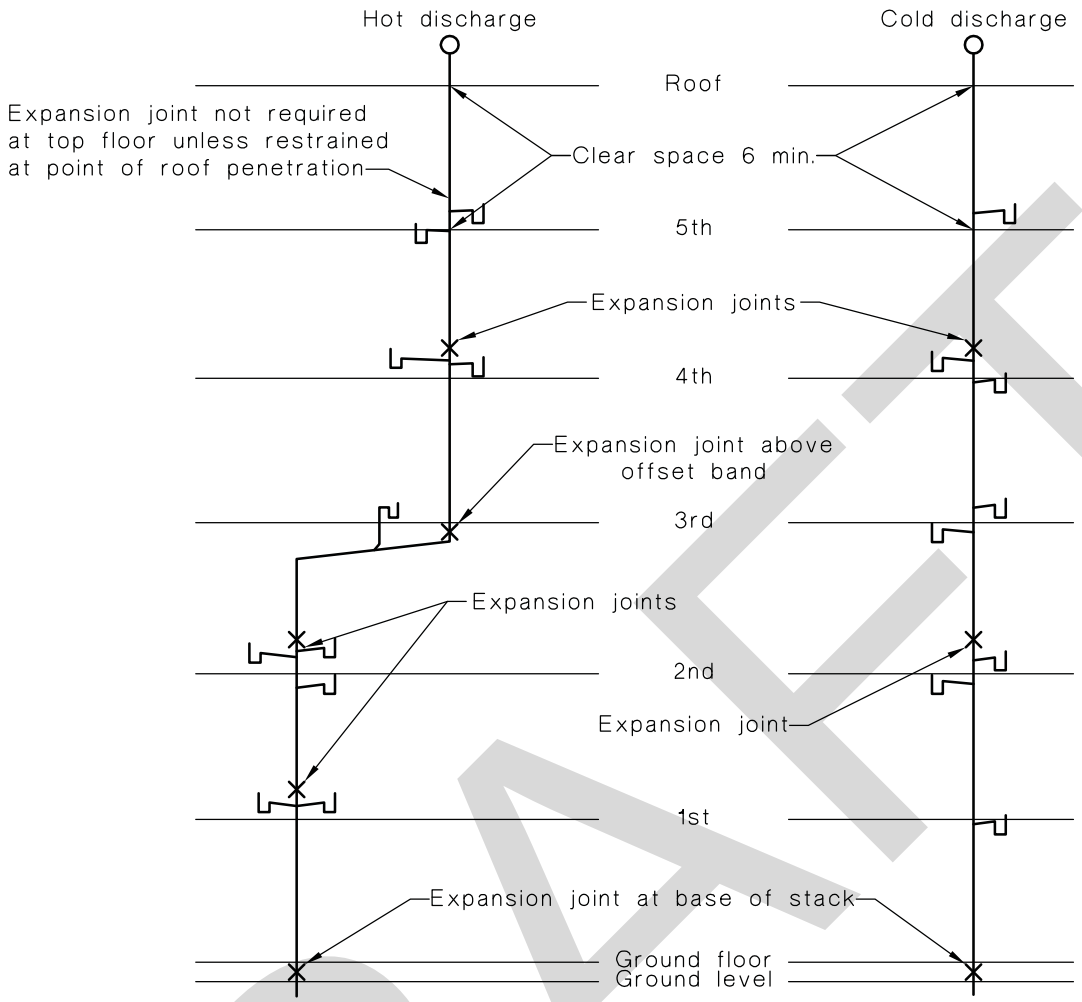

(a) Location of expansion joints

(b) Freedom from restraint

NOTE: Vents omitted for clarity.

DIMENSIONS IN MILLIMETRES

FIGURE 10.6.4 EXPANSION JOINTS IN COPPER AND COPPER-ALLOY STACKS

10.7 INSTALLATION OF PVC-U PIPES

PVC-U pipes shall be installed in accordance with AS/NZS 2032 or NZS 7643, as appropriate, and the requirements of this Standard.

10.8 INSTALLATION OF HIGH DENSITY POLYETHYLENE (PE-HD) PIPES

PE-HD piping systems shall be installed in accordance with AS/NZS 2033 and, when passing through concrete footings, PE-HD pipes and fittings shall be wrapped with an impermeable flexible sheath not less than 6 mm thick.

10.9 DISCONNECTION OF SANITARY PLUMBING

Disused pipework shall be disconnected as near as practicable to the connecting pipe remaining in service, and the remaining fitting made watertight by using a cap or plug sealed in a manner appropriate for the material remaining in use.

10.10 IDENTIFICATION OF PIPES

Other than in houses or duplexes (Class 1A), all pipes installed in ducts, accessible ceilings or exposed in basements or plant rooms shall be clearly identified in accordance with AS 1345 or NZS 5807, as appropriate.

10.11 INSTALLATION OF ABOVE-GROUND (ELEVATED) PIPEWORK AND CONNECTION OF FIXTURES USING DRAINAGE PRINCIPLES

10.11.1 General

Above-ground (elevated) pipework and associated fixture connections may be installed within buildings, provided they are installed in accordance with the requirements of Clauses 10.11.2 to 10.11.4.

10.11.2 Maximum length and size

The maximum length and size of any unvented graded pipe, branch or fixture discharge pipe shall be in accordance with Clause 3.10 and Table 3.10.2.

10.11.3 Applicable installations

The requirements of this Clause shall apply to the first four floor levels only above either the invert level of the connection point to the boundary trap riser or inspection shaft, and the uppermost floor only where connected into a discharge stack.

Branches serving the uppermost floor, which connect to a discharge stack, may use drainage principles.

Branches serving the floors below the uppermost floor shall conform with a nominated stack design in accordance with Clause 10.11.4(b).

10.11.4 Installation

Above-ground (elevated) pipework, materials, methods of support and fixing shall be in accordance with the relevant requirements of this Standard and the following:

(a) No graded discharge pipe or branch, except a discharge stack, shall connect to any vertical section of pipework within the first four floor levels.

(b) Any discharge stack system in excess of the maximum of four floor levels specified in Clause 10.11.3 shall be installed as a stack in accordance with the relevant requirements of Sections 6, 8, 9 or Section 10, as applicable.

(c) The loading in fixture units shall not exceed the maximum specified in Tables 3.3.1, 3.10.2 and 8.2.2(B), as applicable.

(d) The connection of any discharge pipe or branch to the elevated pipework shall be in accordance with the relevant requirements of Clauses 6.6, 6.7, 8.6 and 9.9, and Section 11.

(e) The total length of an unvented branch pipe, including the length of the fixture discharge pipe that connects to the main section of graded elevated pipework, shall be in accordance with Clause 3.10.3.

NOTES:

1 The discharge stack may roll over on the top floor or carry on as a stack vent.

2 A maximum loading of 30 fixture units, including not more than two WC pans or two slop hoppers, may discharge into any branch on the top floor of a discharge stack without further ventilation.

3 For details of installation see Figure 10.11.4.

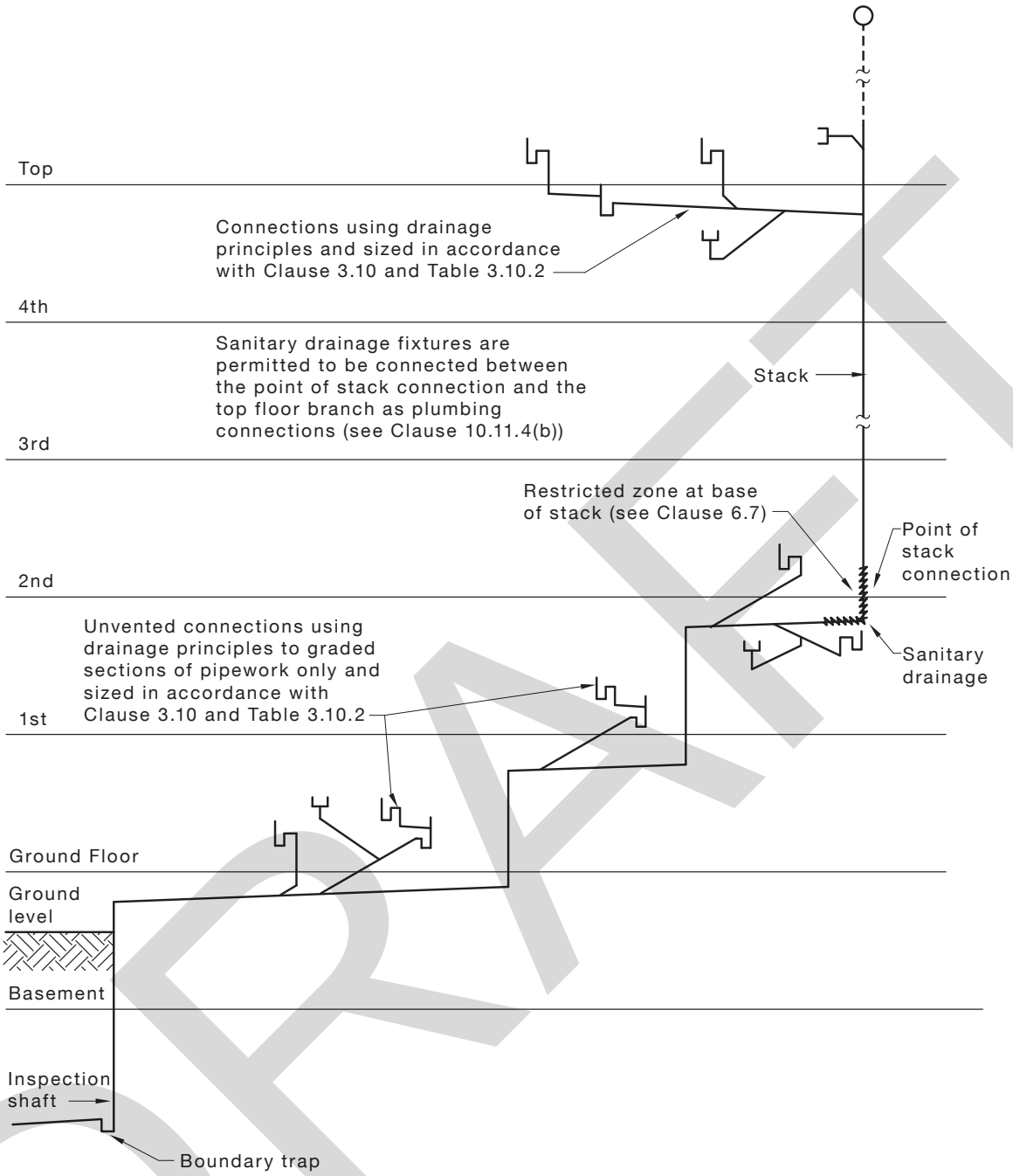

FIGURE 10.11.4 ABOVE-GROUND (ELEVATED) PIPEWORK WITHIN BUILDING—BASED ON DRAINAGE PRINCIPLES

10.12 INSTALLATION OF BOUNDARY TRAPS, REFLUX VALVES AND GULLIES ABOVE GROUND WITHIN BUILDINGS

10.12.1 Boundary traps

Boundary traps installed within a building and above ground or floor surface level shall conform with the relevant requirements of Clause 4.4.

10.12.2 Reflux valves

Reflux valves within a building shall be installed in accordance with the following:

(a) Where located above ground or floor surface level, the installation shall conform with the relevant requirements of Clause 4.5.

(b) Where installed immediately below any floor slab or other structure, a clear space shall be provided above the reflux valve to facilitate maintenance.

10.12.3 Gullies

Gullies located within buildings shall—

(a) be installed above ground or floor surface level;

(b) be supported in the same manner as for a boundary trap;

(c) be provided with an overflow pipe that shall terminate at a height in accordance with Clause 4.6.6; and

(d) conform with the relevant requirements of Clause 4.6.

10.13 METHODS OF JOINTING OF PIPES

10.13.1 General

The joints between discharge pipes, vent pipes, fittings, fixtures and appliances shall be made as appropriate for the materials being joined, and each joint shall be rendered airtight.

Joints between similar and dissimilar materials shall be made using one of the joint types specified in Table 10.13.1.

Jointing materials shall conform with Clause 2.6.

TABLE 10.13.1

JOINTS FOR PIPES AND FITTINGS OF SIMILAR AND DISSIMILAR MATERIALS

To—Material 2	From—Material 1								
	Cast and ductile iron	Copper and copper alloy	Galvanized steel	PP	PVC-U	PE	ABS/ASA	VC	FRC
Cast and ductile iron	BG RR ER	BG RR* SB/ER	BG RR* ER	BG RR	BG RR SC/ER BC	BG RR	BG RR SC/ER BC	RR/BG RR/ER RR CN BC	RR BC
Copper and copper alloy	BG RR* ER/SB	SB RR	BG TH/SB ER/SB	TH/SB RR	SC/TH/SB SC/ER/SB RR	RR SB/TH	SC/TH/SB SC/ER/SB RR	RR/SB RR/BG RR/ER CM	RR BC ER
Galvanized steel	BG RR* ER	BG SB/TH SB/ER	TH BG	TH	SC/TH SC/ER	TH	SC/TH SC/ER	CM RR RR/ER	RR BC
PP	BG RR	SB/TH RR	TH	RR TH EF	RR SC/TH	RR TH	RR SC/TH	RR CM	RR BC
PVC-U	BG RR ER/SC	SB/TH/SC SB/ER/SC RR	TH/SC ER/SC	RR TH/SC	SC RR BC	TH/SC RR BC	SC RR BC	RR/SC BC	RR BC ER
PE	BG RR	SB/TH RR	TH	RR TH	SC/TH RR BC	EF RR BG	SC/TH RR BC	RR CM	RR BC
ABS/ASA	BG RR ER/SC	SB/TH/SC SB/ER/SC RR	TH/SC ER/SC	RR TH	SC RR BC	TH/SC RR BC	SC RR BC	RR/SC BC	RR BC ER
VC	BG/RR ER/RR RR CM BC	SB/RR BG/RR ER/RR CM	CM RR ER/RR	RR CM	SC/RR BC	RR CM	SC/RR BC	RR CM BC	RR BC
FRC	RR BC	RR BC	RR BC	RR BC ER	RR BC ER	RR BC	RR BC ER	RR BC	RR BC ER

* Applies to vent connections only.

LEGEND:

BG = bolted gland
RR = rubber ring
ER = epoxy resin
CM = cement mortar
SB = silver brazed
SC = solvent cement
TH = threaded
BC = band clamped sleeve
EF = electrofusion

NOTE: Where more than one joint type is shown separated by one or more slashes, the joint between the two different materials requires an adaptor. The other of the joints is always shown from (Material 1) to (Material 2) as indicated in the Table headings.

10.13.2 Bolted gland joints (BG)

Bolted gland joints shall conform with AS 1631 for cast iron material and, for other materials, with the relevant requirements of AS 1631.

The sealing rings used shall be appropriate for the material and dimensions of the pipes or fittings being joined.

10.13.3 Rubber ring joints (RR)

When used in sanitary drainage work, rubber ring joints used below ground shall be designed to inhibit root penetration.

10.13.4 Epoxy resin joints (ER)

Epoxy resin shall be appropriate to the materials being joined.

NOTE: Epoxy resin joints should only be used where the joint is designed for use with epoxy resin.

10.13.5 Cement mortar joints (CM)

Cement mortar shall conform with Clause 2.7.2.

10.13.6 Silver brazed joints (SB)

Silver-brazed joints shall be made using silver brazing alloy conforming with Clause 2.6.3.1. Joints shall be made by either—

(a) using fittings; or

(b) fabricating junctions from the pipes using tools specially designed for the purpose.

10.13.7 Solvent cement joints (SC)

Solvent cement and priming fluid used for jointing plastics pipes and fittings shall conform with Clause 2.6.5.1 as appropriate.

10.13.8 Threaded joints (TH)

Threaded joints shall conform with the relevant Standards for the materials to be joined and sealed.

10.13.9 Band-clamped sleeve joints (BC)

Band-clamped sleeve joints shall conform with AS 1646.

10.13.10 PE-HD joints

PE-HD joints shall be installed in accordance with AS/NZS 2033.

SECTION 11 REDUCED VELOCITY AERATOR STACK SYSTEM

11.1 SCOPE OF SECTION

This Section specifies design and installation requirements for the reduced velocity aerator stack system for sanitary plumbing.

11.2 GENERAL

Where the system uses an aerator junction fitting (a proprietary junction fitting) in the stack at each floor level for connection of graded discharge pipes, common discharge pipes or branch drains from sanitary fixtures, a de-aerator shall be included at the base of the stack.

NOTE: Airflow requirements of the system are provided through the stack vent.

Discharge pipes, common discharge pipes and branch drains that exceed the maximum allowable length or fixture unit loading shall be vented.

11.3 SIZE OF STACKS

The stack shall be sized in accordance with Tables 6.2(A), 8.2.2(A) and 8.2.2(B), and Clause 8.4, Items (a), (b), (c) and (e).

Where any stack is offset, the offset section shall be sized—

(a) as a straight stack, if the offset is more than 45º to the horizontal; or

(b) as a graded pipe, if the offset is less than 45º to the horizontal, and the stack shall continue undiminished in size.

The stack shall not be reduced in size in any direction.

11.4 STACK VENTS

Stacks shall extend unimpeded to atmosphere.

NOTE: Stack vents may be connected at their uppermost end into a common header terminating at one point.

If interconnected, interconnection of stack vents shall occur not less than 1 m above the highest flood rim level of the highest fixture. The size of header vent shall increase by one pipe size downstream of each interconnection junction [see Figure 11.4(A)].

The number of interconnected stacks shall not exceed 5 × DN 100 stacks or 4 × DN 125 stack, with a maximum size vent of DN 300 terminating through the roof.

If the horizontal length of the stack vent offset exceeds 12 m, the size of the offset shall be increased by one pipe size [see Figure 11.4(B)].

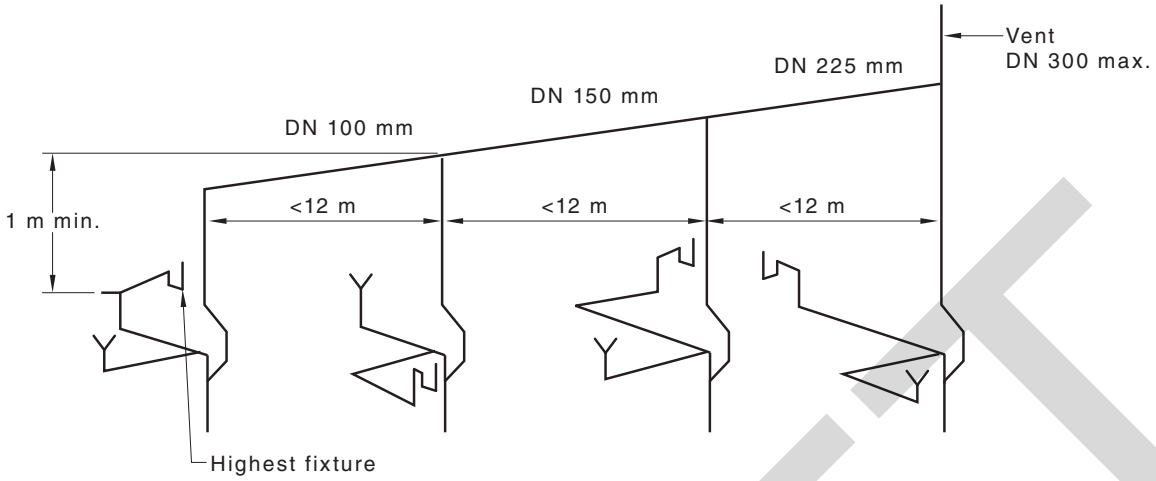

FIGURE 11.4(A) MANIFOLDING OF STACK VENTS

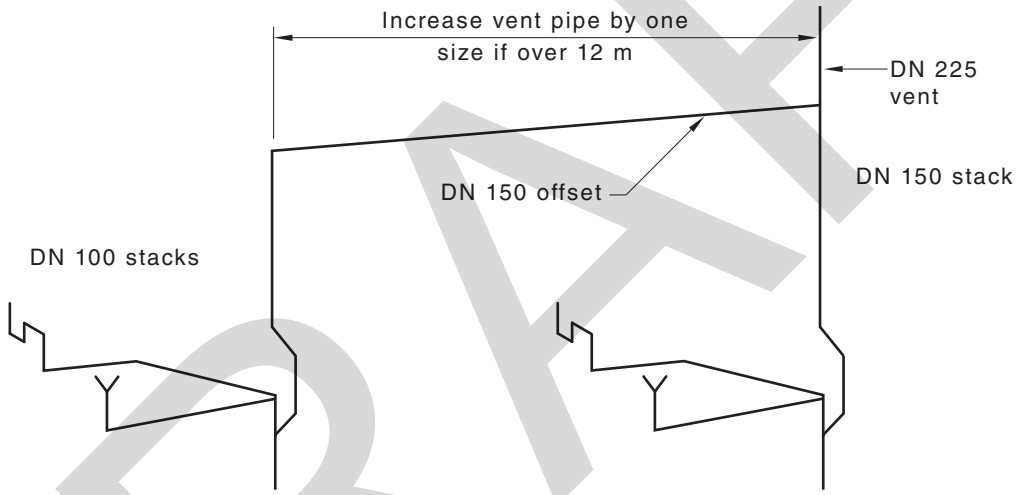

FIGURE 11.4(B) STACK VENT OFFSETS OVER 12 m

11.5 OFFSETS IN STACKS

11.5.1 General

The following applies for offsets in stacks:

(a) A double inline offset shall be installed midway if the distance between any two aerators or an aerator junction fitting and a de-aerator exceeds 5 m [see Figure 11.5.1(A)].

(b) A pressure relief bypass pipe between the upper and lower sections of the stack shall be installed on every stack offset greater than 45° [see Figure 11.5.1(B)].

(c) The minimum grade of stack offsets shall be in accordance with Table 8.6.2.2.

Connections near graded offsets shall be restricted in accordance with Clauses 8.6.2.3, 8.6.2.4 and 8.6.2.5.

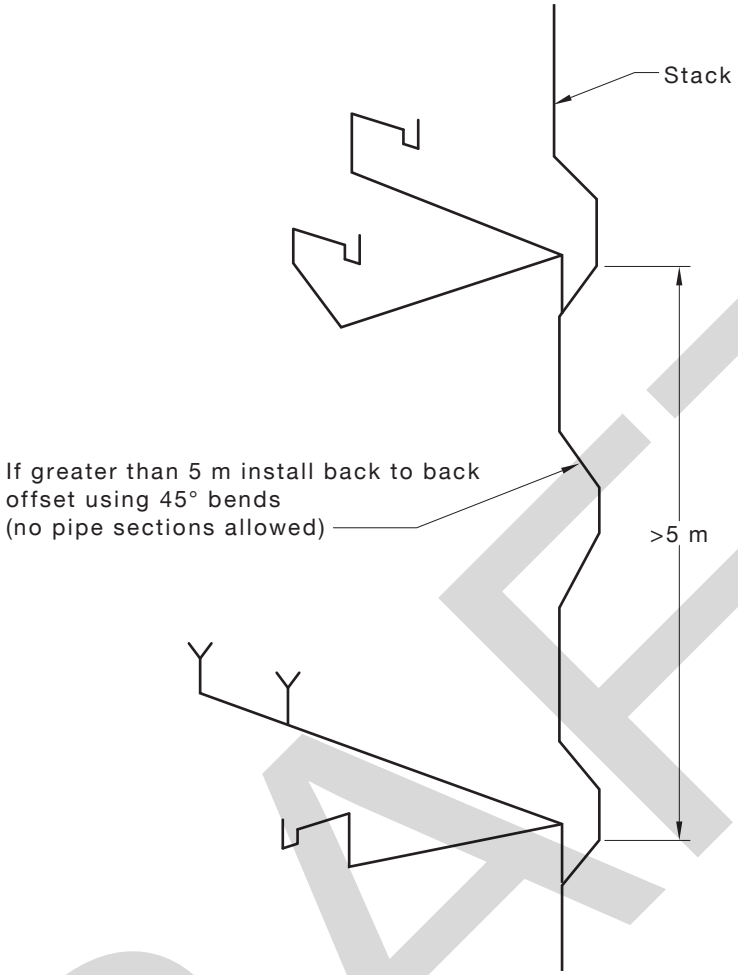

FIGURE 11.5.1(A) DOUBLE INLINE OFFSET

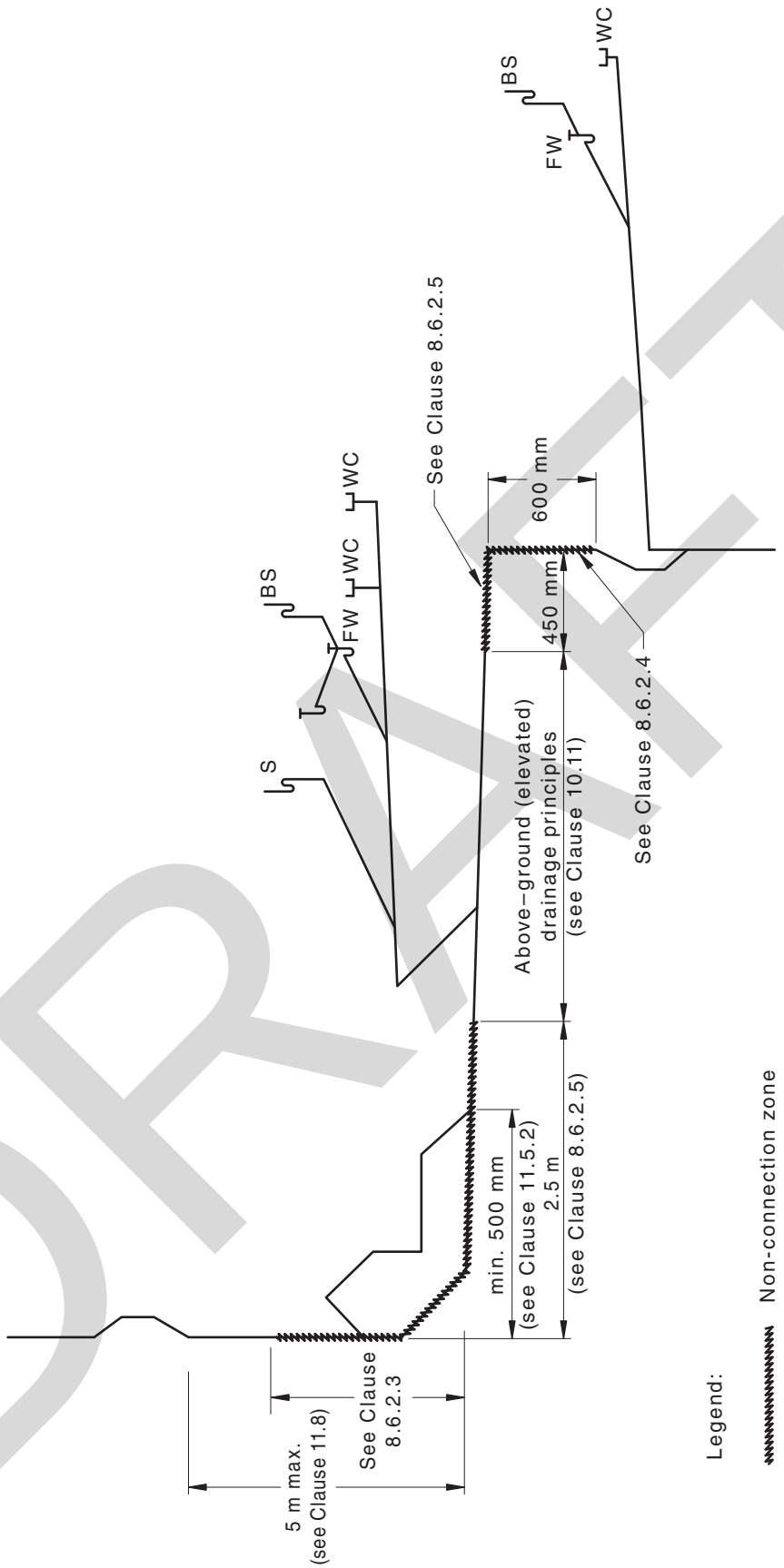

FIGURE 11.5.1(B) GRADED STACK OFFSET WITH PRESSURE RELIEF BYPASS

11.5.2 Pressure relief bypass for stack offsets

Where a pressure relief bypass is used for a graded stack offset, the pressure relief bypass pipe shall run at least 0.5 m from the centre-line of the stack to the centre of the pressure relief bypass inlet junction. No connections shall be made into bypass pipe.

11.6 AERATOR JUNCTION FITTINGS

11.6.1 General

An aerator junction fitting shall be installed at each floor level that receives a soil or waste discharge.

11.6.2 Opposed connections

Opposed connections of aerator junction fittings shall be connected only to equal numbers of fixtures of the same kind.

NOTE: For a typical aerator junction fitting, see Figure 11.6.2.

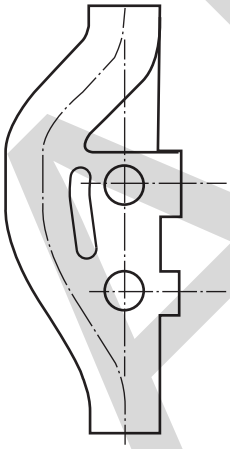

FIGURE 11.6.2 TYPICAL AERATOR JUNCTION FITTING

11.7 MAXIMUM LENGTH OF DISCHARGE PIPES

Any unvented discharge pipe or unvented common discharge pipe shall not exceed 10 m in length, and shall not include a vertical drop, between the crown of the trap and the invert of the junction, exceeding—

(a) 2 m for water closet pans with DN 80 discharge pipes;

(b) 1.5 m for basins and bidets; and

(c) 2.5 m for all other fixtures.

The length of a graded discharge pipe shall be in accordance with Appendix B.

11.8 SIZE OF DISCHARGE PIPES

The size of a graded discharge pipe, common discharge pipe or branch drain shall be in accordance with Table 3.10.2 and Appendix B.

11.9 DE-AERATORS

A de-aerator shall be installed at the base of the stack to provide a pressure relief bypass between the stack and the drain to which it is connected, as shown in Figure 11.9.

The distance from the de-aerator to the closest aerator or double offset shall not exceed 5 m [see Figure 11.4(A)].

The pressure relief bypass pipe on a de-aerator shall run at least 2.5 m from the centre-line of the stack to the centre of the pressure relief bypass inlet junction, as shown in Figure 11.9. No connection shall be made into the bypass pipe.

No connections shall be made to the de-aerator graded pipe within 2.5 m of the stack base.

Pressure relief bypass pipes for de-aerators shall run parallel to the base of the de-aerator with the invert of the pressure relief bypass pipe no lower than the centre-line of the drain.

NOTE: See also Figures 11.4(B) and 11.9.

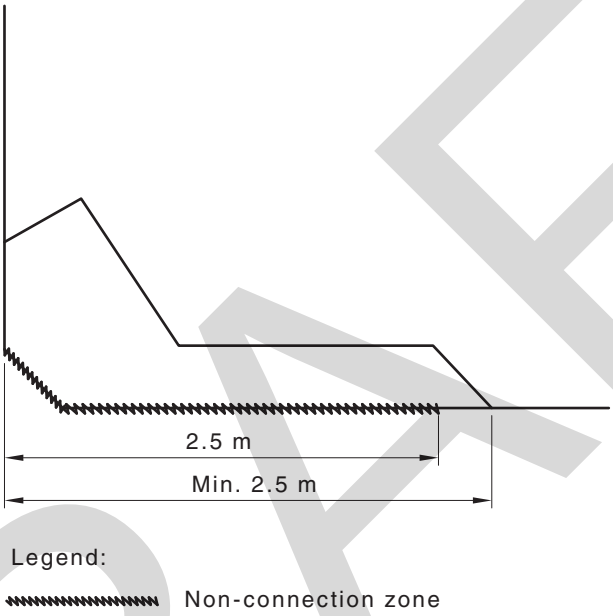

FIGURE 11.9 DE-AERATOR WITH PRESSURE RELIEF BYPASS PIPE AT THE BASE OF THE STACK

SECTION 12 PUMPED DISCHARGE

12.1 SCOPE OF SECTION

This Section specifies requirements for pumped discharge.

12.2 GENERAL

Pumping shall only be used where it is not practicable to gravitate to the connection. The pumping apparatus shall be positioned to facilitate easy connection to the gravity sewer.

The pumping apparatus may be one of the following:

(a) Compressed air ejection system.

(b) Wet well (including submersible pump).

(c) Small bore macerator/pump.

12.3 COMPRESSED AIR EJECTION

Ejector pots shall be sized according to maximum flow rates.

NOTE: Ejector pots may be duplicated.

12.4 EJECTOR VENT

The ejector vent shall be not less than DN 40, and shall either—

(a) extend separately to open air; or

(b) be interconnected with a relief or stack vent at least 10 m above the ejector pot.

12.5 WET WELLS

12.5.1 General

Wet wells shall be fit for purpose and installed in an accessible location.

12.5.2 Construction

The structure shall be sound and constructed of materials that will resist corrosion from the sewage and sewage gases internally and aggressive soils externally.

12.5.3 Materials

Materials for wet wells shall be precast or cast in situ reinforced concrete, corrosion-resistant metals, brickwork or glass-reinforced plastics.

12.5.4 Base

The base shall be constructed of, or finished with, a self-cleansing grade towards the pump inlet.

12.5.5 Cover

The cover shall be constructed of similar materials to that of the wet well and shall have access openings with removable airtight covers sized for maintenance purposes.

12.5.6 Ladders

Where a wet well exceeds a depth of 1.2 m, a ladder shall be provided in accordance with Clause 4.8.3.3.

12.6 INSTALLATION OF PUMPS

12.6.1 General

Pumps shall be suitable for unscreened sewage and shall be installed as follows:

(a) The pumping apparatus shall be securely fixed using corrosion-resistant fixings.

(b) Each pump shall be fitted with an isolating valve and check valve on the delivery side.

(c) Pumps shall be installed with connections to permit removal and replacement of the pumps.

(d) Pumps shall be controlled so as to limit the number of starts per hour to within the capacity of the pump, and shall, as far as practicable, empty the contents of the wet well at each operation.

NOTES:

1 Pumps may be duplicated.

2 The required pumping rate should be based on an assessment of the expected inflow, holding capacity of the well and allowable discharge.

12.6.2 Inlet to wet well

The invert of the gravity discharge pipe to a wet well shall be located at least 100 mm above the highest working level and terminate with a square junction.

12.6.3 Venting

The wet well shall have a minimum DN 80 vent.

NOTE: Manufactured wet wells that are watermarked may be approved with a smaller vent size.

12.6.4 Sealing

All pipes or apparatus passing through the wet well walls or cover shall be sealed with a compatible material.

12.7 PUMPED DISCHARGES OR RISING MAINS

The pump discharge pressure piping shall conform with the relevant sections of AS/NZS 3500.1 and this Standard. The outlet pipe shall discharge to one of the following locations:

(a) An inspection chamber.

(b) A boundary trap shaft.

(c) A stack below the lowest fixture connection on any floor.

(d) A drain or combined discharge pipe, provided the connection is at least 2.5 m from any other connection.

(e) Downstream of a reflux valve or at least 2.5 m upstream of a reflux valve.

(f) A minimum of 1 m downstream of a boundary trap.

(g) Direct to the network utility operator's sewer where approved by the network utility operator.

12.8 PUMP DISCHARGE FROM WASTE FIXTURES

12.8.1 General

Pumping shall only be used where gravity connection from a waste fixture is not possible. The pumping apparatus shall be positioned in the same room adjacent to the waste fixture.

12.8.2 Holding tank

The holding tank shall conform with Clauses 12.5.2, 12.5.4 and 12.5.5.

12.8.3 Provision of valves

Valves shall be provided as follows:

(a) Where the pump is located inside the holding tank, a non-return valve and isolating valve shall be located on the outlet side of the pump.

(b) Where the pump is located outside of the holding tank, an isolating valve shall be located on the inlet and outlet of the pump and a non-return valve shall be located on the downstream of the outlet isolating valve.

12.8.4 Inlet

The invert of each waste inlet shall be located at least 100 mm above the highest working level of the holding tank.

12.8.5 Outlet size

The pump discharge pipes shall be at least DN 25 and not less than the pump outlet size.

12.8.6 Venting

The holding tank shall be provided with a vent having a minimum size of DN 50 and shall conform with the venting requirements for waste fixtures. The vent shall be positioned a minimum of 100 mm above the waste inlet.

12.8.7 Pump discharge pipe

The pump discharge pipe from waste fixtures, or swimming pools shall be connected in accordance with Clause 12.7, or connected to a gully riser, as shown in Figure 12.8.7(A) or Figure 12.8.7(B).

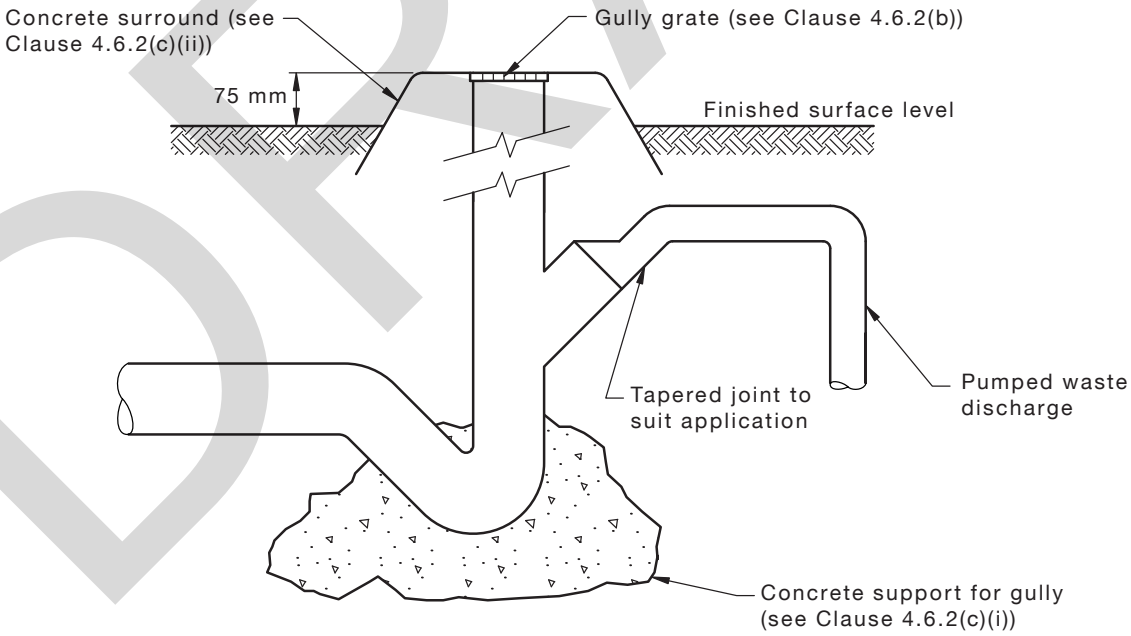

FIGURE 12.8.7(A) CONNECTION OF PUMPED WASTE DISCHARGE

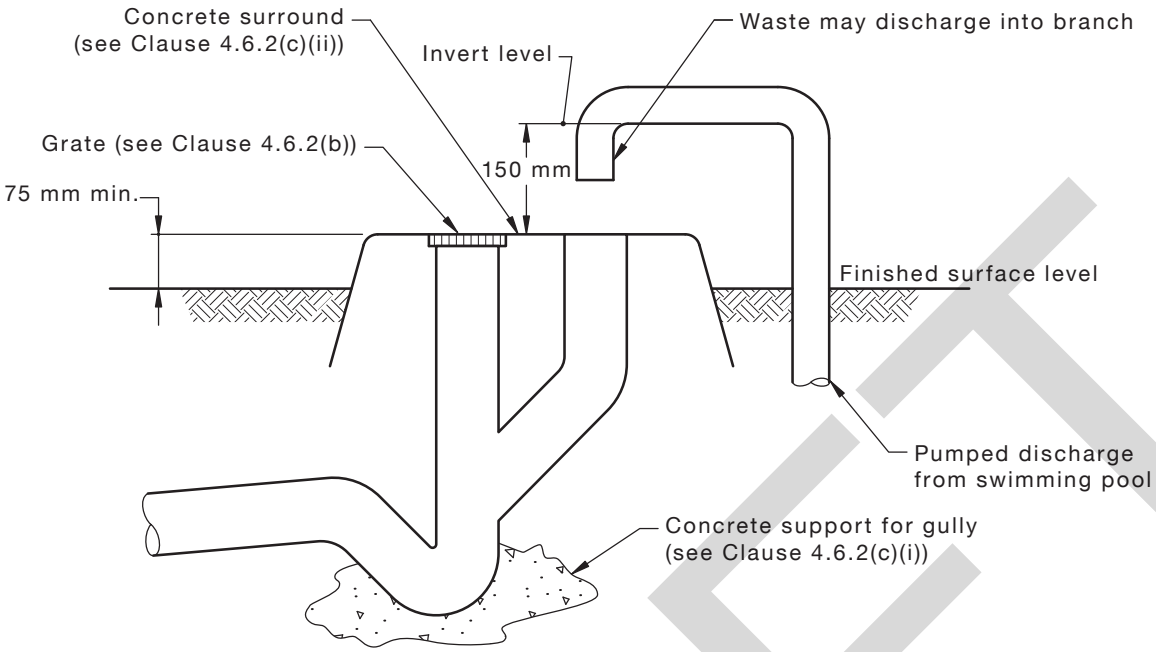

FIGURE 12.8.7(B) CONNECTION OF PUMPED WASTE DISCHARGE FROM SWIMMING POOLS

12.9 SMALL BORE MACERATOR PUMPS

Small bore macerator pumps shall discharge in accordance with Clause 12.7.

A vent pipe to a macerator pump shall terminate in accordance with Clause 6.8.4 or interconnect with any other vents other than those specified in Clause 6.8.3.

NOTE: Small bore macerator pumps may not operate if air admittance valves are the sole means of venting the unit.

SECTION 13 FIXTURES AND APPLIANCES

13.1 SCOPE OF SECTION

This Section specifies requirements for the installation of sanitary fixtures and appliances, and their connection to the sanitary plumbing or sanitary drainage system.

The maximum lengths of discharge pipes without venting shall be in accordance with Appendix B.

Water supply for the sanitary flushing shall be in accordance with AS/NZS 3500.1.

13.2 INSTALLATION OF SANITARY FIXTURES FOR PEOPLE WITH A DISABLITY

The installation of sanitary fixtures for people with a disability shall conform with—

(a) in Australia, the NCC; or

(b) in New Zealand, the requirements of the New Zealand Building Code.

13.3 GENERAL INSTALLATION REQUIREMENTS

13.3.1 Installation of fixtures

Fixtures and appliances shall be secured in position, independent of support from their traps, waste and discharge pipes or water supply connections. They shall be installed in a manner that facilitates disconnection.

13.3.2 Location of fixture traps or self-sealing devices

Fixture traps or self-sealing devices shall be installed downstream of the fixture outlets in accordance with Clause 6.4.3.

13.3.3 Untrapped fixtures

Untrapped fixtures that discharge through a floor waste gully shall be connected in accordance with Table 4.6.3.

13.3.4 Connection of combination fixtures in pairs

Where a combination of waste fixtures is connected in pairs to a single fixture trap, the arrangement shall be in accordance with Clause 6.4.4.

13.3.5 Connection of soil fixtures

Soil fixtures shall not discharge through floor waste, or overflow relief or disconnector gullies.

13.3.6 Fixture grates

Excluding water closet pans, slop hoppers, bedpan washers, bedpan sterilizers, tundishes, soil dump points and sanitary napkin disposal units, the outlet of each fixture shall be provided with a grate.

Where the fixture trap is not accessible, the grate shall be removable.

13.3.7 Fixture discharge pipes

Fixture and appliance discharge pipes shall be installed in accordance with the following:

(a) Clause 3.10 for direct to drain connections.

(b) Clause 3.11 and Clause 3.12 for unvented drains discharging to gullies.

(c) Clause 4.6.7 for floor waste gully connections.

(d) Table 4.6.3 for disconnector gully connections.

(e) Clause 6.5 for graded discharge pipe connections.

(f) Clause 8.3 for fully vented and fully vented modified stack connections.

(g) Clause 9.5 for single stack and single stack modified stack connections.

(h) Clause 10.11 for above-ground pipework and connection of fixtures using drainage principles.

(i) Section 11 for reduced velocity aerator stack systems.

(j) Appendix B for maximum length of fixture discharge pipe without venting.

13.4 PLANT ROOMS

Discharges from plant rooms shall drain to a tundish, trapped sump or floor waste gully.

Fixture unit ratings shall be determined from Table 6.2(B).

13.5 PRESSURIZED CHAMBERS

Where a floor waste gully is located in a pressurized chamber, the trap shall be in accordance with Clause 6.4.2.

13.6 AUTOPSY TABLES

Autopsy tables shall be connected to sanitary drains in accordance with the following:

(a) Each autopsy table shall drain through an untrapped waste pipe not smaller than DN 50 and a maximum length of 1.2 m to a flushing floor waste gully with an outlet not smaller than DN 65.

(b) The water supply to the flushing floor waste gully shall be from a flush valve, cistern or break tank.

13.7 BAIN-MARIES AND BOILING WATER UNITS

Bain-maries and boiling water units shall drain to a tundish installed in accordance with Clause 13.21.

13.8 BASINS

Basins shall be fitted with a DN 40 (or DN 32, New Zealand only) trap and a waste pipe not smaller than DN 40 or connected as fixture pairs in accordance with Clause 6.4.4.

13.9 BATHS

Baths shall be connected by—

(a) an untrapped waste pipe not smaller than DN 40 to a floor waste gully in accordance with Table 4.6.7.2; or

(b) a trap and waste pipe not smaller than DN 40.

Where a bath trap is not accessible, the bath shall discharge untrapped to a floor waste gully (FWG) in accordance with Table 4.6.7.2 and Appendix B.

13.10 BEDPAN WASHERS AND SANITIZERS

Bedpan washers and sanitizers shall be fitted with traps and discharge pipes not smaller than DN 80.

13.11 BIDETS

Bidets and bidettes shall be connected by—

(a) an untrapped waste pipe not smaller than DN 40 (or DN 32, New Zealand only) to a floor waste gully; or

(b) a trap and waste pipe not smaller than DN 40 (or DN 32, New Zealand only).

13.12 DENTAL UNITS

13.12.1 Single

A single dental unit shall discharge through a sealed trap not smaller than DN 40.

13.12.2 Multiple

Multiple dental units draining to a common point shall discharge through a sealed trap not smaller than DN 50.

13.13 DRINKING FOUNTAINS

Drinking fountains shall be fitted with a DN 40 (or DN 25, New Zealand only) trap and a waste pipe not smaller than DN 40 (or DN 32, New Zealand only).

13.14 FOOD WASTE DISPOSAL UNITS (DOMESTIC TYPE)

The outlet of a waste disposal unit may be connected directly to the trap of an adjoining kitchen sink.

NOTE: For an example, see Figure 13.25.2.1(c).

13.15 REFRIGERATED AIR CONDITIONERS, HEAT PUMPS, REFRIGERATED, DEEP-FREEZE CABINETS, COMMERCIAL COFFEE-MAKING MACHINES AND ICE-MAKING MACHINES

Outlet pipes from refrigerated air conditioners, heat pumps, refrigerated, deep-freeze cabinets, commercial coffee-making machines and ice-making machines shall be connected to a tundish installed in accordance with Clause 13.21 or discharge above the inlet to a self-sealing device.

13.16 MACERATING SANITARY NAPKIN DISPOSAL UNITS

Macerating sanitary napkin disposal units shall not discharge to a floor waste, or overflow relief or disconnector gully.

13.17 SHOWERS

13.17.1 Individual showers

An individual shower shall be fitted with a minimum DN 80 grate or channel grate, and shall be connected by—

(a) an untrapped waste pipe not smaller than DN 40 to a floor waste gully;

(b) a trap and waste pipe not smaller than DN 40.

NOTE: Prefabricated shower bases will need to be supported in accordance with the manufacturer's instructions.

13.17.2 Shower groups

Shower groups may drain individually, as fixture pairs in accordance with Clause 6.4.4 or to a common channel.

13.17.3 Common channels

Common channels shall—

(a) be graded to the outlet; and

(b) discharge through a removable grate, trap and discharge pipe as specified in Table 13.17.3.

TABLE 13.17.3

SIZE OF SHOWER DRAINAGE CHANNEL OUTLETS

Numbers of showers	Sizes of grate DN	Size of trap and discharge pipe DN
1	80	40
2 or 3	80	50
4 to 6	100	65

13.18 SINKS

13.18.1 Kitchen sinks

Kitchen sinks shall be connected using a fixture trap and waste pipe not smaller than DN 50 (or DN 40, New Zealand only) or as fixture pairs in accordance with Clause 6.4.4 directly to a stack, sanitary drain or overflow relief or disconnector gully.

Triple bowl domestic kitchen sinks shall be connected—

(a) as three single bowl sinks;

(b) as a fixture pair and one single bowl sink; or

(c) through a single fixture trap, provided the length of discharge pipe between the sink outlets and the fixture trap seal is not greater than 1.2 m.

13.18.2 Bar sinks

Bar sinks (domestic) shall be connected by—

(a) an untrapped waste pipe not smaller than DN 40 to a floor waste gully; or

(b) a trap and waste pipe not smaller than DN 40.

Bar sinks (commercial) shall be connected by—

(i) an untrapped waste pipe not smaller than DN 50 to a floor waste gully; or

(ii) a trap and waste pipe not smaller than DN 50.

13.18.3 Cleaners' sinks

Cleaners' sinks shall be connected to drains by—

(a) an untrapped waste pipe, not smaller than DN 50, to a floor waste gully; or

(b) a trap and waste pipe not smaller than DN 50.

13.18.4 Pot, utility and laboratory sinks

Pot, utility or laboratory sinks shall be connected using a trap and waste pipe not smaller than DN 50.

Pot, utility or laboratory sinks shall not be connected as fixture pairs.

NOTE: Trade waste discharge from pot, utility or laboratory sinks may require pre-treatment as determined by the network utility operator.

13.19 SLOP HOPPERS

13.19.1 Connection

Slop hoppers shall be connected directly to soil stacks or drains with a discharge pipe not smaller than DN 100.

13.19.2 Installation

Slop hoppers shall be securely fixed.

13.20 INSTRUMENT STERILIZERS AND AUTOCLAVES

Instrument sterilizers and autoclaves shall discharge over a tundish installed in accordance with Clause 13.21.

13.21 CONNECTION OF TUNDISHES

Tundishes may be connected—

(a) to a waste pipe not smaller than DN 25 in accordance with Clause 4.6.7.8;

(b) to a trapped waste pipe not smaller than DN 40 in accordance with Appendix B; or

(c) to a fixture trap.

When the tundish and discharge pipe is connected to a fixture trap—

(i) the connection shall be made above the level of the water seal; and

(ii) the top of the tundish shall be above the flood level rim of the fixture.

Pipes discharging over a tundish shall have an air gap of a size at least twice the internal diameter of the discharging pipe.

Tundishes shall be accessible.

13.22 DOMESTIC SWIMMING POOLS

The discharge pipe from swimming pools shall be installed in accordance with Clause 12.8.7.

C13.22 *Overflows from skimmer boxes of domestic swimming pools should discharge to a discharge point nominated by the authority having jurisdiction.*

The discharge from swimming pools to the sanitary plumbing and drainage system may require the approval of the network utility operator.

13.23 TROUGHS

13.23.1 Ablution

Ablution troughs shall be connected by—

(a) an untrapped waste pipe, not smaller than DN 40, to a floor waste gully; or

(b) a trap and waste pipe not smaller than DN 50.

13.23.2 Laundry

Laundry troughs shall be connected by—

(a) an untrapped waste pipe, not smaller than DN 40, to a floor waste gully; or

(b) a trap and waste pipe not smaller than DN 40.

13.24 URINALS

13.24.1 Slab type

Slab type urinals shall be connected directly to soil stacks or drains with a trap and discharge pipe not smaller than DN 65 for urinal walls up to 5 m in length. Where the urinal wall is more than 5 m in length, additional outlets shall be connected.

13.24.2 Wall-hung

13.24.2.1 *General*

The floor of a room containing one or more wall-hung urinals shall grade to a floor waste gully installed in accordance with Clause 4.6.7.

13.24.2.2 *Flushing wall-hung urinals*

Flushing wall-hung urinals (other than those with an integral trap) shall be connected to a trap not smaller than DN 40 (or DN 32, New Zealand only).

13.24.2.3 *Non-flushing (waterless) urinals*

Waterless wall-hung urinals with an integral cartridge seal or integral self-sealing mechanical device may be installed without an additional fixture trap or self-sealing mechanical device.

Prior to installing a waterless wall-hung urinal to an existing system, the materials of the pipes in the existing system shall be determined.

The undiluted discharge from the urinal shall not be transported through copper pipework.

13.24.3 Conversion to waterless urinals

Urinals shall not be converted into waterless urinals unless the requirements of Clauses 13.24.2.1 and 13.24.2.3 have been satisfied.

13.25 WASHING MACHINES

13.25.1 Clothes-washing machines

The pumped discharge from domestic clothes-washing machines shall be connected—

(a) over the rim or into the sud-saver connection of a laundry trough;

(b) into a trapped waste pipe not smaller than DN 40; or

(c) into trapped or untrapped waste pipe, not smaller than DN 40, connected to a floor waste gully.

NOTE: Trade waste discharge from commercial clothes-washing machines may require pre-treatment as determined by the network utility operator.

13.25.2 Domestic dishwashing machines

13.25.2.1 *Discharge*

The pumped discharge from domestic dishwashing machines shall be connected—

(a) into a trapped waste pipe not smaller than DN 40;

(b) above the water seal of a DN 50 trap fitted to the outlet of a kitchen sink; or

(c) through a domestic type food waste disposal unit.

NOTE: A typical domestic dishwashing machine connection is shown in Figure 13.25.2.1.

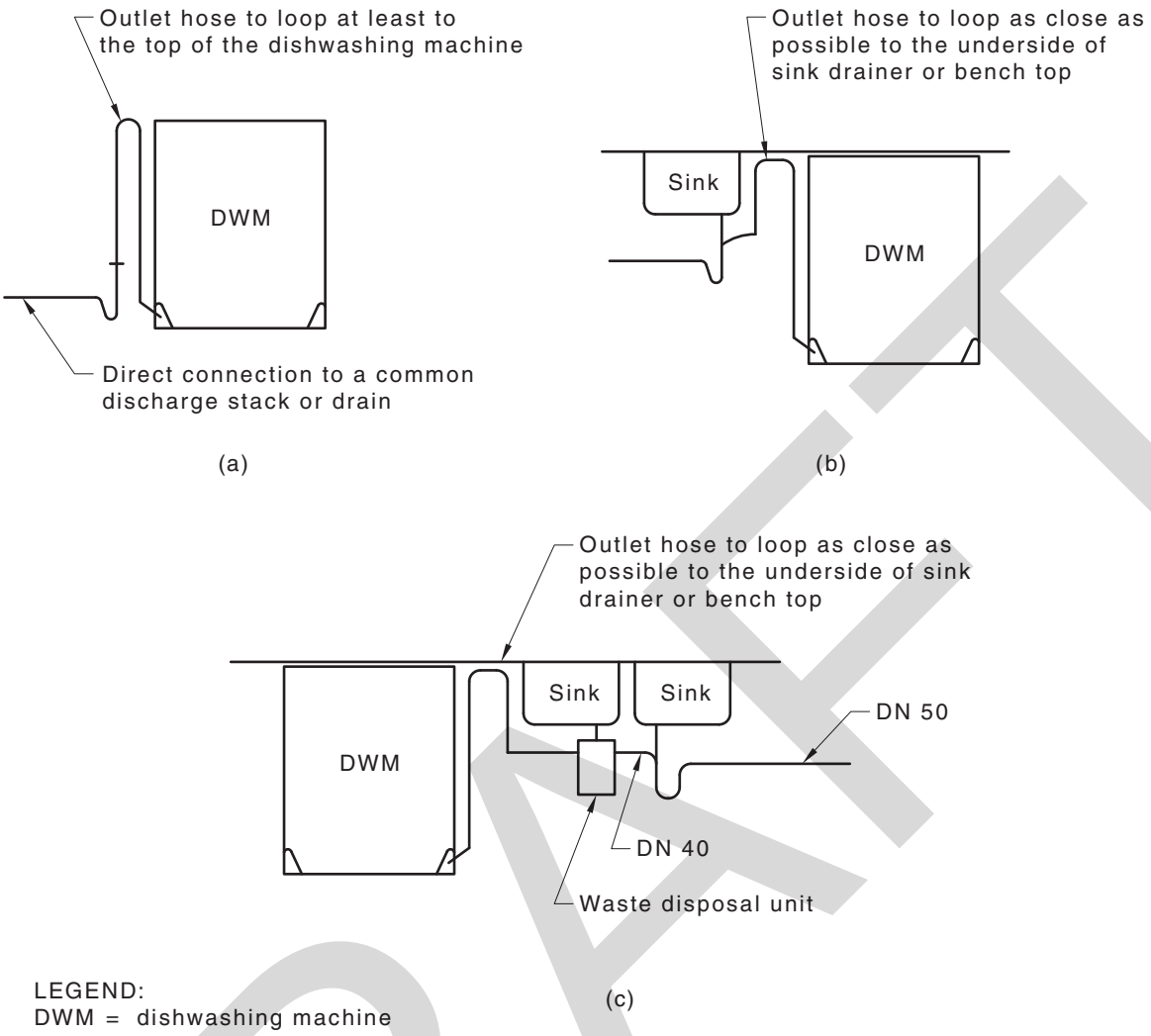

FIGURE 13.25.2.1 TYPICAL CONNECTIONS OF DOMESTIC DISHWASHING MACHINE

13.25.2.2 *Connection of outlet hose*

Outlet hoses of domestic dishwashing machines shall be connected in accordance with the following:

(a) Where the outlet hose is connected above the water seal of a sink trap, it shall be looped as close as possible to the underside of the sink drainer or benchtop before being extended downwards to the connection.

(b) If the trapped waste pipe to which the connection is made discharges directly to the drain, stack or common discharge pipe, the outlet hose shall be extended at least to the top of the dishwashing machine before looping downwards to the trapped waste pipe.

13.25.3 Commercial dishwashing machines

Commercial dishwashing machines shall be connected to a fixture trap and waste pipe not smaller than DN 50.

NOTE: Trade waste discharge from commercial dishwashers may require pre-treatment as determined by the network utility operator.

13.25.4 Glass-washing machines

Glass-washing machines shall be connected by—

(a) an untrapped waste pipe not smaller than DN 40 to a floor waste gully;

(b) a trap and waste pipe not smaller than DN 40; or

(c) a pump-out hose fitted in the same manner as domestic dishwashing machine.

NOTE: For connection of outlet hose, see Clause 13.25.2.1.

13.26 UNTRAPPED FLOOR DRAINS

13.26.1 General

An untrapped floor drain may be installed for the purpose of draining wastewater spillage from a floor in case of overflow.

13.26.2 Restrictions on use

An untrapped floor drain shall not be—

(a) connected to any stack or discharge pipe that connects directly to the drain; or

(b) installed in any room that contains a urinal.

13.26.3 Installation

Each untrapped floor drain shall—

(a) be fixed and supported in accordance with Clause 10.2;

(b) have a removable grate of at least DN 40; and

(c) be connected to a separate, graded discharge pipe of at least DN 40.

13.26.4 Termination of discharge pipe

The outlet from an untrapped floor drain shall be located so that the discharge cannot cause damage or be a nuisance, and shall terminate either—

(a) internally over a tundish connected to a floor waste gully, in accordance with Clause 4.6.7.8; or

(b) externally with a flap and within 100 mm above finished surface level.

13.27 WATER CLOSET PANS

13.27.1 Connection

Water closet pans shall be connected directly to soil stacks or sanitary drains with a discharge pipe not smaller than DN 80.

13.27.2 Installation

Water closet pans shall be securely fixed by—

(a) bedding no thicker than 20 mm;

(b) brackets; or

(c) corrosion-resistant fasteners.

SECTION 14 MULTI-UNIT DEVELOPMENTS

14.1 SCOPE OF SECTION

This Section specifies minimum requirements for the main lines of a sanitary drain located in a multi-unit development of three or more residential buildings.

NOTE: Where two or more Class 1 dwellings are located under the same roof, each individual dwelling is considered to be an individual building.

14.2 METHODS OF DESIGN

14.2.1 General

In a multi-unit development, provision shall be made for an inspection shaft, an overflow relief gully and an open upstream vent, as specified in Clause 14.2.3, at each individual residential building.

NOTE: Solutions for design of multi-unit developments are also set out in the Sewerage Code of Australia.

14.2.2 Maintenance shafts

In multi-unit developments of 20 or more residential buildings, a maintenance shaft having ready access at ground surface for drain clearing equipment and television inspection shall be provided on the main lines of the sanitary drainage system, at each change of direction and main line junctions. The spacing of maintenance shafts along straight sections shall not exceed 150 m.

NOTE: No additional inspection openings are required if openings are on the main line of sanitary drains where maintenance shafts are installed.

14.2.3 Inspection shafts and overflow relief gullies and open upstream vents at each individual residential building

In multi-unit developments, provision shall be made at each individual residential building for the following:

(a) An inspection shaft in accordance with Clause 4.4.2, immediately upstream of the junction with the main line of the sanitary drain.

(b) Additional overflow relief from sewerage surcharge.

(c) An open upstream vent.

NOTE: Provided protection against sewage overflow has been made as specified in Clause 4.6.6, any additional gully may have a lesser vertical separation than that specified in Clause 4.6.6.

SECTION 15 TESTING OF SANITARY PLUMBING AND SANITARY DRAINAGE INSTALLATIONS

15.1 GENERAL

This Section specifies requirements for the inspection and testing of sanitary plumbing and sanitary drainage installations.

NOTE: Testing of vacuum drainage systems is covered in Section 16.

All new, repaired or replaced sanitary plumbing and sanitary drainage installations shall be tested by hydrostatic, air pressure or vacuum testing to demonstrate that they are watertight. Testing shall be conducted prior to the placement of the trench fill (backfill).

Any defects shall be either repaired or replaced with pipes and fittings of a suitable material, and the repaired or replaced section retested until it conforms with this Section.

Sanitary fixtures shall be tested by subjecting them to normal use. After each test, the residual water seal in the trap of the fixture concerned or in any other trap connected to the same system shall, under normal operating conditions, retain a water seal of not less than 25 mm.

Where a water seal of not less than 25 mm cannot be retained under normal operating conditions, inspect the sanitary plumbing and drainage system to determine the cause and undertake modifications or repairs, or both, and retest the sanitary fixture until it conforms with this Clause.

In some cases it may be more cost-effective to renovate the existing drain using an approved trenchless rehabilitation technique, in which case the drain shall be tested and inspected after renovation.

Any renovation defects shall be either repaired or replaced with pipes and fittings of a suitable material and the repaired or replaced section retested and reinspected until it conforms with this Section.

NOTE: Where closed circuit television inspection of sanitary plumbing and drainage is required, it should be carried out in accordance with Appendix E.

15.2 HYDROSTATIC TEST (WATER TEST)

Where hydrostatic testing is used as a means for testing sanitary plumbing and sanitary drainage installations, non-drinking water may be used.

The sanitary plumbing and sanitary drainage shall be filled with water—

(a) for sanitary drainage, to a height of not less than 1 m above the soffit level at the highest point of the section being tested;

(b) for sanitary plumbing, to the spill level of the highest fixture or to the flood level of the lowest sanitary fixture, whichever is higher; and

(c) in either case, not exceeding 3 m at the lowest point of the test section.

The pressure shall be maintained without leakage for at least 15 min. The source of any leak shall then be ascertained and any defects repaired. The section under test shall then be retested.

NOTE: Where the authority having jurisdiction or the network utility operator has a water management strategy that prohibits the use of water for specific purposes or has instituted water restrictions, hydrostatic testing of pipework may not be permitted, in which case an air or vacuum test should be undertaken to verify that the sanitary plumbing and drainage pipework is satisfactory.

15.3 AIR PRESSURE TEST

15.3.1 Sealing inlets and outlets

All sanitary plumbing and drainage inlets, outlets and access openings shall be capped and sealed. Air shall be introduced slowly into the section being tested.

15.3.2 Air pressure test procedure

The air test procedure shall be as follows:

(a) Apply an initial test pressure of approximately 15 kPa to the section being tested.

(b) When approximately 15 kPa has been reached, shut off the air pump and supply valve.

(c) Allow the air pressure to stabilize for a minimum of 3 min while checking for leaks.

(d) After the pressure has stabilized, commence the test to allow the pressure to fall to 10 kPa and then begin recording the time and drop in pressure over the minimum test duration specified in Table 15.3.2.

TABLE 15.3.2

AIR PRESSURE AND VACUUM AIR TESTING ACCEPTANCE TIMES FOR 3 kPa PRESSURE CHANGE

Pipe size	Test, length m					
	50	100	150	200	250	300
DN	Minimum test duration min					
100	2	2	2	2	3	3
150	3	3	3	6	6	6
225	4	5	8	10	13	15
300	6	9	14	18	23	29

15.3.3 Maximum pressure drop

The section of sanitary plumbing or sanitary drainage being tested shall not have a drop in pressure greater than 3 kPa over the minimum test duration specified in Table 15.3.2.

15.4 VACUUM TEST

15.4.1 Sealing inlets and outlets

All sanitary plumbing and drainage inlets, outlets and access openings shall be capped and sealed.

15.4.2 Vacuum test procedure

The vacuum test procedure shall be as follows:

(a) Apply an initial vacuum test pressure of approximately 15 kPa to the section being tested.

(b) When approximately 15 kPa has been reached, shut off the vacuum pump and supply valve.

(c) Allow the vacuum to stabilize for a minimum of 3 min while checking for leaks.

(d) After the pressure has stabilized, commence the test to allow the vacuum to fall to 10 kPa and then begin recording the time and drop in vacuum over the minimum test duration specified in Table 15.3.2.

15.4.3 Maximum vacuum drop

The section of sanitary plumbing or sanitary drainage being tested shall not have a drop in vacuum greater than 3 kPa over the minimum test duration specified in Table 15.3.2.

SECTION 16 VACUUM DRAINAGE DESIGN AND INSTALLATION

16.1 SCOPE OF SECTION

This Section specifies the design and installation requirements and the components of a vacuum drainage system within a property for the removal of wastewater from the collection points to the discharge point connecting to the sanitary drainage system.

NOTES:

1 This Standard specifies the installation requirements for new systems and alterations and additions to existing systems. Care should be taken that any alteration or addition may have an impact on plant requirements and this should be taken into consideration prior to any works.

2 See Clause 16.4.2 for temperature limitations in vacuum drainage systems.

16.2 DEFINITIONS

16.2.1 Buffer

A container for the temporary collection of wastewater on the atmospheric side of a vacuum interface valve.

16.2.2 Soil fixture interface valve unit

An assembly which consists of a vacuum interface valve, a rinse valve, a vacuum controller and actuator, which forms part of the vacuum soil fixture.

16.2.3 Vacuum accumulative lift

Sum of all increases in invert levels on the pathway for the drainage from any VWC or buffer to the vacuum station.

16.2.4 Vacuum automatic interface unit (VAIU)

An assembly consisting of a vacuum interface valve, buffer, sensor and vacuum controller.

16.2.5 Vacuum batch volume

Volume of wastewater discharge from the buffer or water closet during one cycle of the vacuum interface valve.

16.2.6 Vacuum branch pipeline

A section of pipeline that connects one or a number of VWC pans and/or vacuum automatic interface units to the vacuum main pipeline.

16.2.7 Vacuum controller

A device which, when activated, opens the vacuum interface valve and the VWC rinse valve (if installed).

16.2.8 Vacuum drainage system

An assembly of pipes, fittings and apparatus used to collect and convey the discharge from fixtures to the sanitary plumbing or drainage.

NOTES:

1 A vacuum drainage system uses the pressure differential between ambient atmosphere (air) and sub-atmospheric pressure (partial vacuum) to create movement of air, soil and wastewater (discharge) through the pipeline to a point of discharge into sanitary plumbing or drainage.

2 A vacuum drainage system should not be confused with a vacuum sewerage system which is used by a network utility operator to transport sewage from multiple properties.

16.2.9 Vacuum generator

Equipment installed in the vacuum station to generate and maintain the operational vacuum level within the vacuum drainage system.

16.2.10 Vacuum interface valve

A device that acts as an interface between the vacuum pressure in the vacuum pipeline and the atmospheric pressure at the fixture or buffer. Interface valves automatically open when a predetermined volume of wastewater has collected in the buffer, or is actuated by means of button activation.

16.2.11 Vacuum lift

An increase in invert levels of the wastewater pathway from a vacuum soil fixture or VAIU to a vacuum branch or vacuum main pipeline.

16.2.12 Vacuum lift pipe

A vertical increase in elevation of the vacuum pipe invert level, achieved either with a vertical pipe configuration or a diagonal (typically 45°) configuration.

16.2.13 Vacuum loading units (VLU)

Unit of measurement of the load (air + wastewater) applied to a vacuum drainage system by various vacuum fixtures that are connected to the vacuum drainage system. It is used to size pipes for main lines and branch lines.

16.2.14 Vacuum main pipeline

A section of pipeline that connects one or more vacuum soil fixtures and/or vacuum automatic interface units to the vacuum station. Vacuum branch pipelines may be connected to the vacuum main pipeline.

16.2.15 Vacuum recovery time

Time taken, after the operation of a vacuum interface valve, for the vacuum level at the vacuum interface valve to be restored to its operational pressure range.

16.2.16 Vacuum reforming pocket

A pipe assembly creating a low point within the vacuum pipeline to collect wastewater and reform the batch volume. Vacuum reforming pockets are to be configured as an open or closed pocket.

16.2.17 Vacuum second stage lift

A lift in a vacuum branch line or vacuum main pipeline, distinguished from a reforming pocket in that the downstream end of the lift are to be vertical.

16.2.18 Vacuum sensor

A device that detects the presence of a pre-determined level of wastewater in a buffer, which results in a vacuum controller activating the vacuum interface valve to evacuate the wastewater from the buffer.

16.2.19 Vacuum soil fixture rinse valve

A control valve designed to rinse and replenish the water in the vacuum soil fixture.

16.2.20 Vacuum station

Installation comprising a vacuum generator(s), control equipment and a means of waste discharge (forwarding pump or gravity outlet), and which may also incorporate vacuum wastewater collecting tank(s).

16.2.21 Vacuum station forwarding pump

A pump which may be installed at the vacuum station to deliver the wastewater from the vacuum system to a connection to the gravity plumbing or drainage system that discharges to the sewer.

16.2.22 Vacuum water closet (VWC) pan

A VWC pan with a matching assembly of vacuum interface valve, rinse valve, controller, and actuator.

16.3 MATERIALS AND PRODUCTS FOR VACUUM DRAINAGE SYSTEMS

16.3.1 Pipes and fittings for vacuum drainage applications

Vacuum pipelines shall be constructed of one of the following:

(a) PVC-U pressure pipe and fittings with a minimum pressure rating of PN 10 in accordance with AS 1477, ASTM D1785 Schedule 40/80 and ASTM D1785 or CSA B181.2.

(b) PVC-U DWV pipe and fittings in accordance with AS/NZS 1260. Pipes of diameters equal to or greater than DN 100 shall have a pipe stiffness classification of not less than SN8.

(c) Polyethylene pipes and fittings with a maximum standard dimension ration (SDR) 17 in accordance with AS/NZS 4130 and AS/NZS 4129 respectively.

(d) Stainless steel (SS) pipes and push fit ring seal fittings in accordance with AS 3495 or ASTM A269/A269M-15M.

16.4 SYSTEM DESIGN

16.4.1 General

A vacuum drainage system is designed to collect and transport soil and wastewater from vacuum soil fixtures and waste fixtures.

The following components comprise a typical vacuum drainage system:

(a) Vacuum station—provides and maintains the vacuum pressure within the piping network.

(b) Vacuum piping network.

(c) Vacuum soil fixtures.

(d) Vacuum automatic interface unit for wastewater fixtures.

NOTE: See Figures 16.4.1(A) and 16.4.1(B) for examples of vacuum drainage systems.

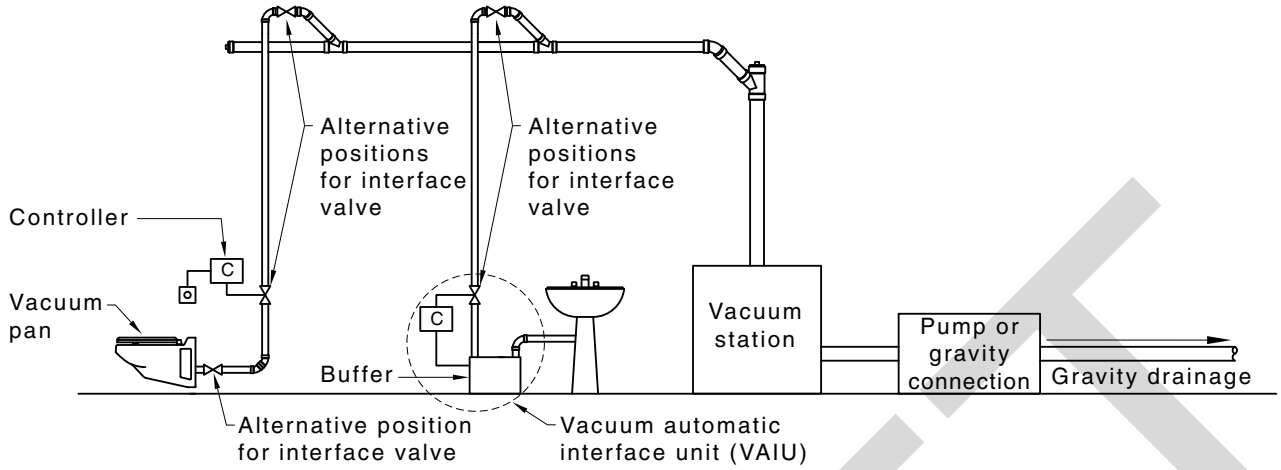

FIGURE 16.4.1(A) TYPICAL SINGLE LEVEL VACUUM DRAINAGE SYSTEM

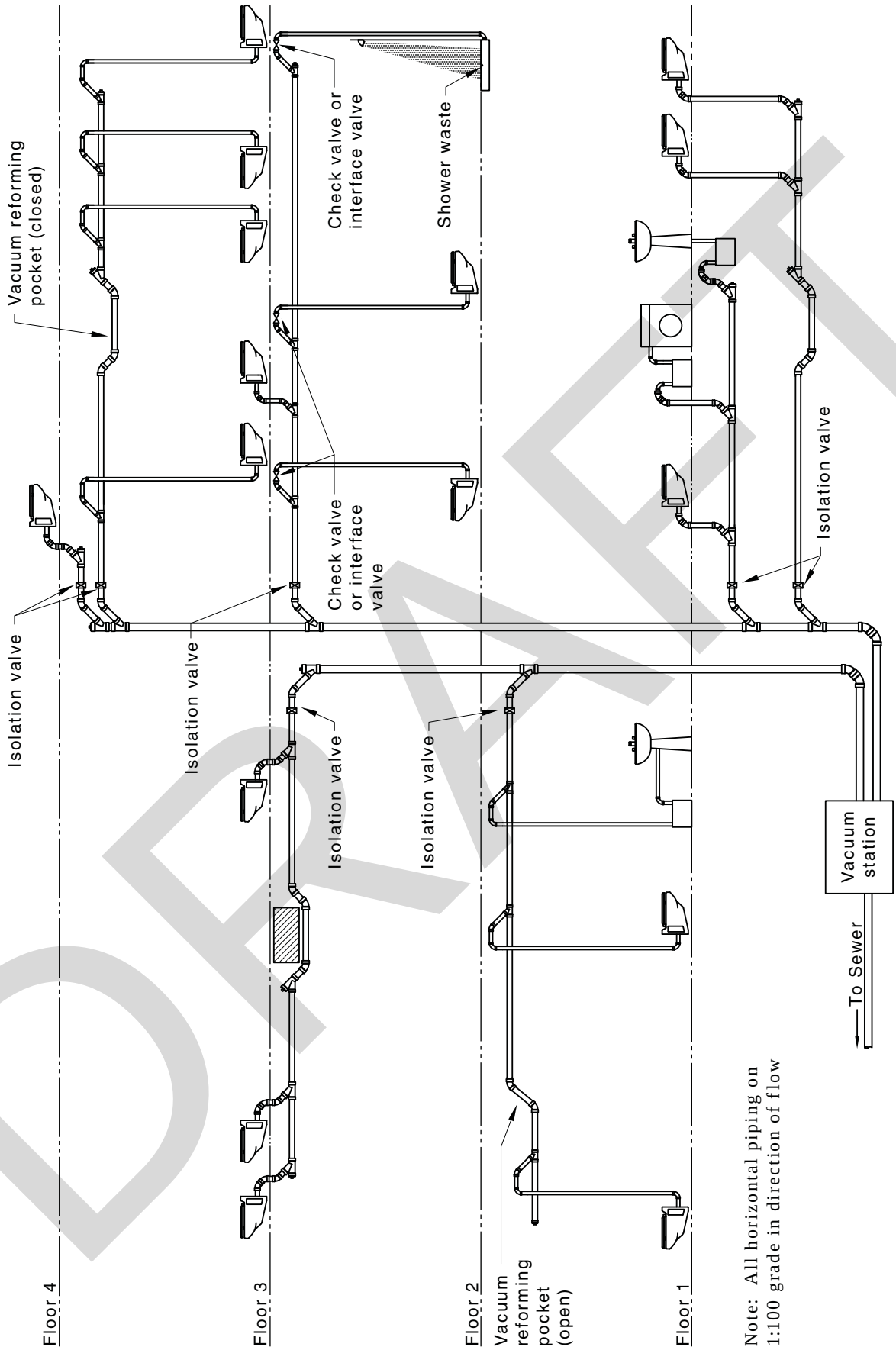

FIGURE 16.4.1(B) TYPICAL MULTI-LEVEL VACUUM DRAINAGE SYSTEM

16.4.2 Design requirements

A vacuum drainage system shall conform with the following:

(a) The operating static pressure shall be between −35 kPa and −70 kPa throughout the system, except for vacuum generator over-run time periods (usually less than 2 min).

(b) The accumulative vacuum lift shall not exceed 6.0 m.

NOTE: See Figure 16.4.2.

(c) The pipework shall not include 90° junctions.

(d) At changes of direction in the pipework, the bend radius shall be at least twice the pipe diameter.

(e) The pipework shall have no more than one 90° change of direction between inspection openings.

(f) The maximum temperature of wastewater conveyed shall not exceed 60°C at any point.

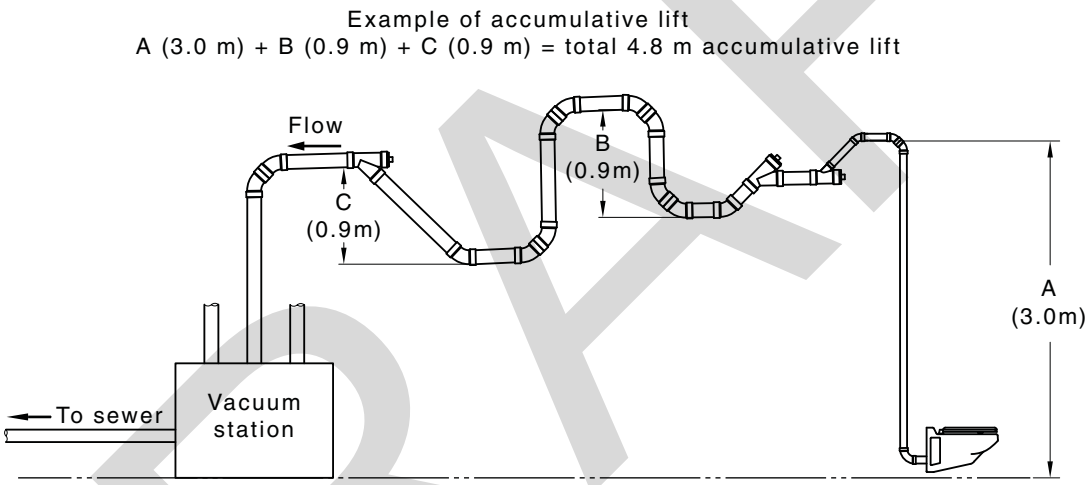

FIGURE 16.4.2 MAXIMUM ACCUMULATIVE LIFT EXAMPLE

16.4.3 Vacuum recovery

The minimum vacuum pressure should be maintained during operational conditions at every vacuum interface valve except for a maximum of 10 s following interface valve actuation.

16.4.4 Vacuum pipework

The pipework shall transport the air and wastewater, including solids, from vacuum automatic interface unit's and vacuum soil fixtures to the vacuum station.

The pipework shall be airtight and watertight when tested.

NOTE:See Clause 16.16 for testing of vacuum drainage systems.

16.4.5 Vacuum pipe sizing

Vacuum pipelines shall be sized in accordance with Appendix F to accommodate the maximum continuous flow. Discharge pipes draining to buffers shall be sized in accordance with Clause 8.3. Soil vacuum fixtures shall be directly connected to the vacuum pipeline.

NOTES:

1 Soil vacuum fixtures connected to a vacuum system should conform with SA TS-100.

2 See Figure 16.4.5 for sizing examples.

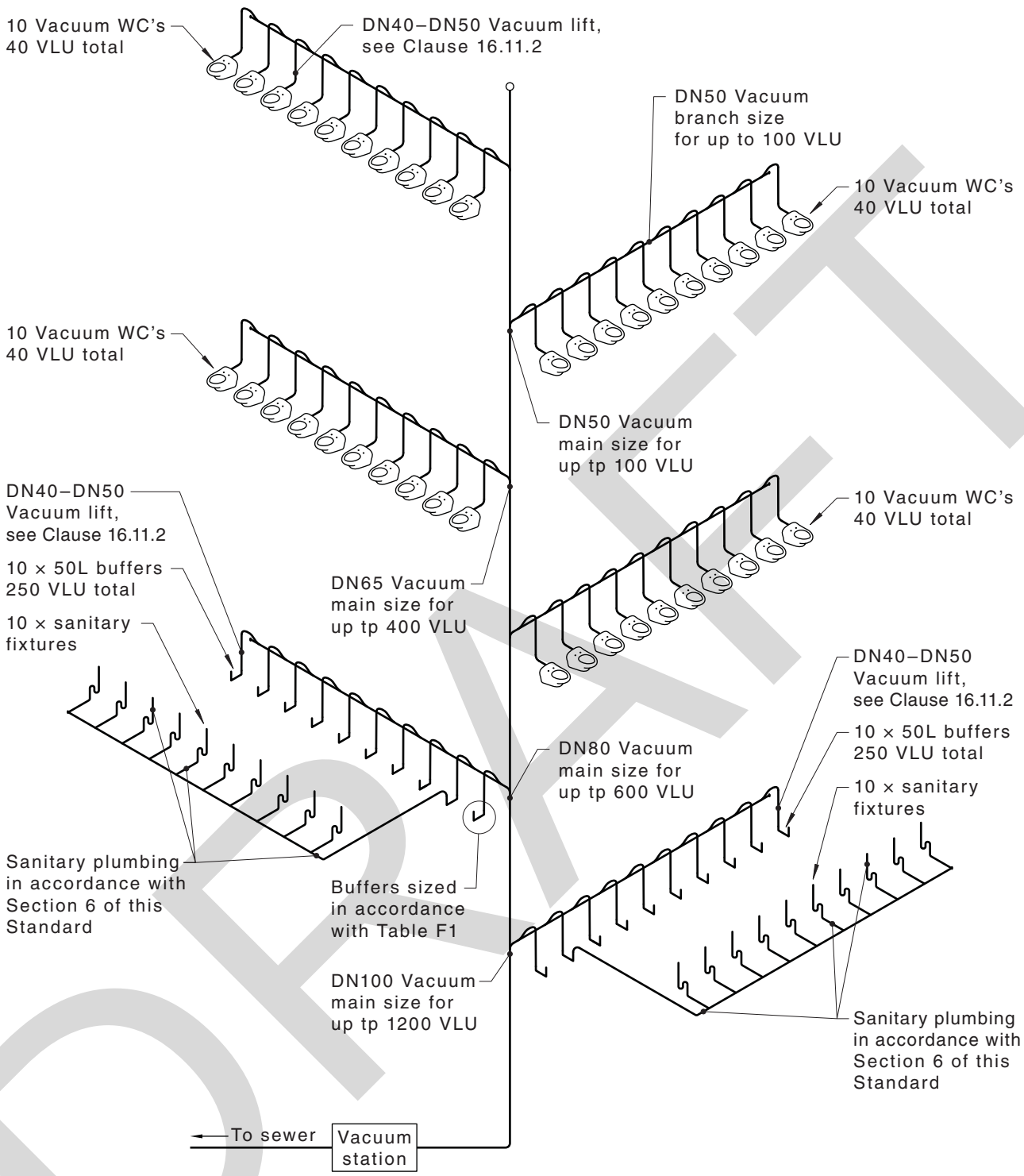

FIGURE 16.4.5 EXAMPLE OF SIZING

16.4.6 Location of vacuum pipes

Any vacuum pipe located under or inside a building shall only serve fixtures within that building.

NOTE: Vacuum pipework in the ground should be located externally to the building, wherever practical.

16.4.7 Eccentric tapered fittings

Eccentric tapered fittings shall be in common alignment with the soffit of the pipe to which it is connected except where connected to a buffer.

16.4.8 Change in pipe size

Pipes shall not diminish in size in the direction of flow.

Lift pipes shall not change size from the VAIU or vacuum soil fixture before they connect to the main vacuum pipe or a branch vacuum pipe.

16.4.9 Grades of vacuum pipes

Vacuum pipes shall be not less than 1% grade in the direction of flow (see Figure 16.4.9).

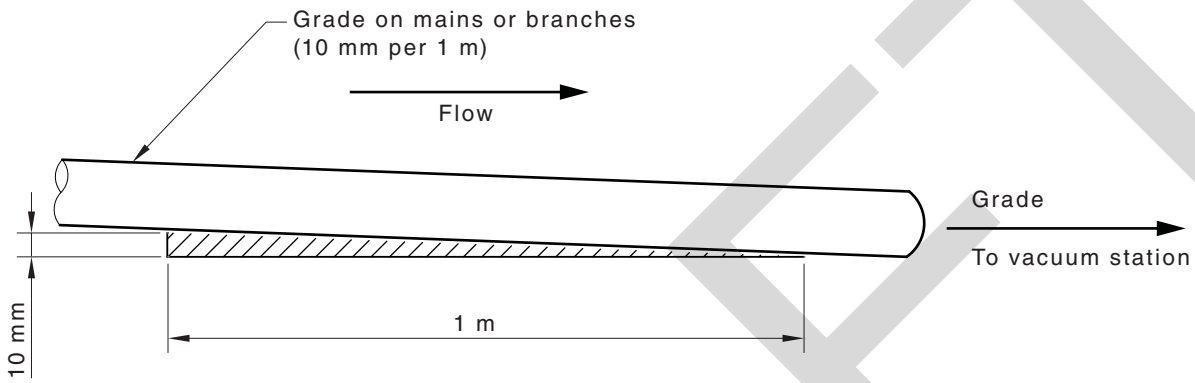

FIGURE 16.4.9 GRADE IN DIRECTION OF FLOW

16.5 INSPECTION OPENINGS (IO)

16.5.1 Location and installation requirement

Pipework in the vacuum system shall be provided with inspection openings in the following locations:

(a) Upstream end of all graded pipework.

(b) Top of all vertical droppers.

(c) Top (downstream) end of all open lifts.

(d) At maximum intervals of 30 m in graded pipe.

(e) Upstream end of any graded pipe receiving waste from a dropper.

(f) Upstream end of a closed reforming pocket.

(g) Wherever necessary for testing purposes (see Clause 10.5.2).

NOTE: See Figure 16.5.1.

A removable interface valve which serves a soil fixture or a buffer, may be used as an inspection opening provided it is located within 500 mm of a junction connection to a vacuum branch or main pipeline.

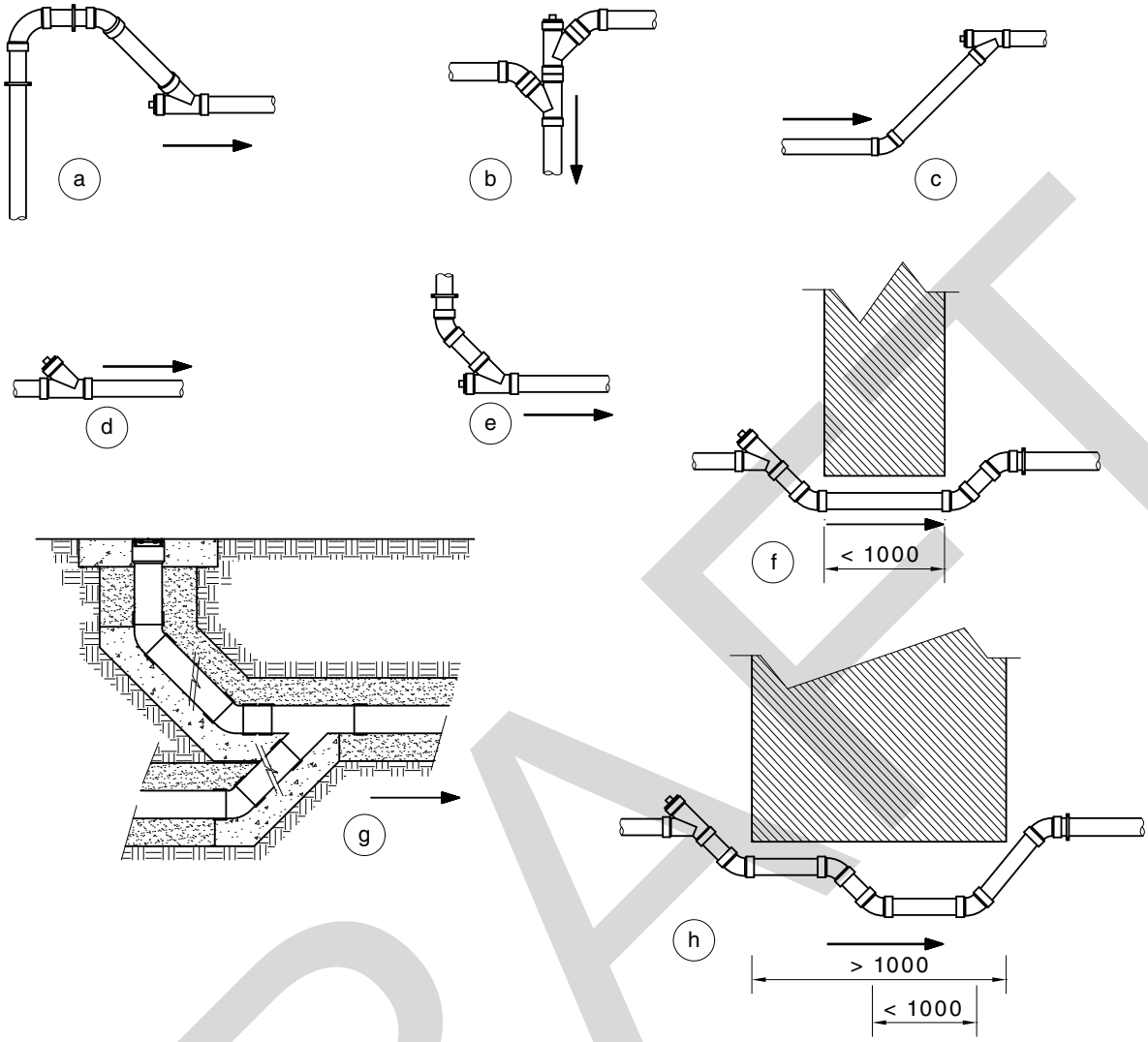

FIGURE 16.5.1 TYPICAL LOCATIONS OF INSPECTION OPENINGS

16.5.2 Size

The minimum size of the inspection opening in vacuum drainage pipelines shall be equal to the nominal size of the pipe up to DN 80. Pipe sizes greater than DN 80 shall have a minimum DN 100 inspection opening.

16.5.3 Access to inspection openings

The following applies to accessing inspection openings:

(a) Inspection openings, where raised to ground level or floor surface level, shall be provided with airtight removable caps and protected by a cover and surrounded in such a manner that no traffic or structural load can be transmitted to the vacuum drainage pipe.

(b) When located in a concealed location, inspection openings shall be provided with a removable access panel.

16.5.4 Sealing

Inspection openings shall be sealed with plugs or caps fitted with a gasket or sealing ring.

Unused sockets shall be sealed with caps.

When a plug or cap with a rubber ring or gasket is removed, a new rubber ring or gasket shall be fitted.

16.6 CONNECTIONS TO VACUUM SYSTEM

Connections to a vacuum system shall be as follows:

(a) Flexible connections in accordance with AS/NZS 4327 when connecting from vacuum soil fixtures.

(b) Flexible connections in accordance with AS/NZS 4327 or sealed threaded joints in the relevant material when connecting discharge pipes or drains to buffers.

NOTE: See Figure 16.6 for typical connection of gravity drainage to vacuum drainage buffer.

(c) Flanged connections in accordance with Clause 2.6.1 when connecting the vacuum station to the downstream drain or sewer.

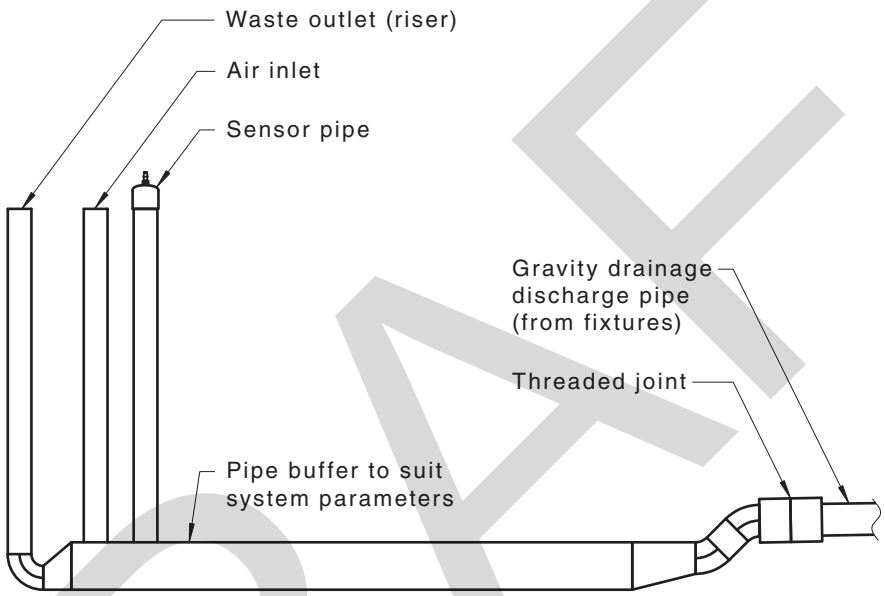

FIGURE 16.6 TYPICAL CONNECTION OF GRAVITY DRAINAGE TO VACUUM DRAINAGE BUFFER

16.7 CONNECTIONS WITHIN A VACUUM SYSTEM

Flexible connections in accordance with AS/NZS 4327 shall be provided in the following locations:

(a) Inlet and outlet of a vacuum buffer or vacuum soil fixture, interface valve unit.

(b) Connection to a vacuum soil fixture.

(c) Connection of the vacuum main pipeline to a vacuum station.

16.8 VACUUM AUTOMATIC INTERFACE UNIT (VAIU)

Vacuum automatic interface units, with the exception of the buffer, shall be—

(a) accessible; and

(b) have access to ambient air.

16.9 BUFFERS

16.9.1 General

Buffers shall be either box type, fabricated from stainless steel, or pipe type, fabricated from piping materials listed in accordance with Clause 16.3.1. Buffers shall incorporate the following requirements within their design:

(a) Sensor pipe.

(b) Air inlet.

(c) Gravity drainage inlet.

(d) Vacuum waste outlet.

NOTE: See Figure 16.9.1 for examples of buffers.

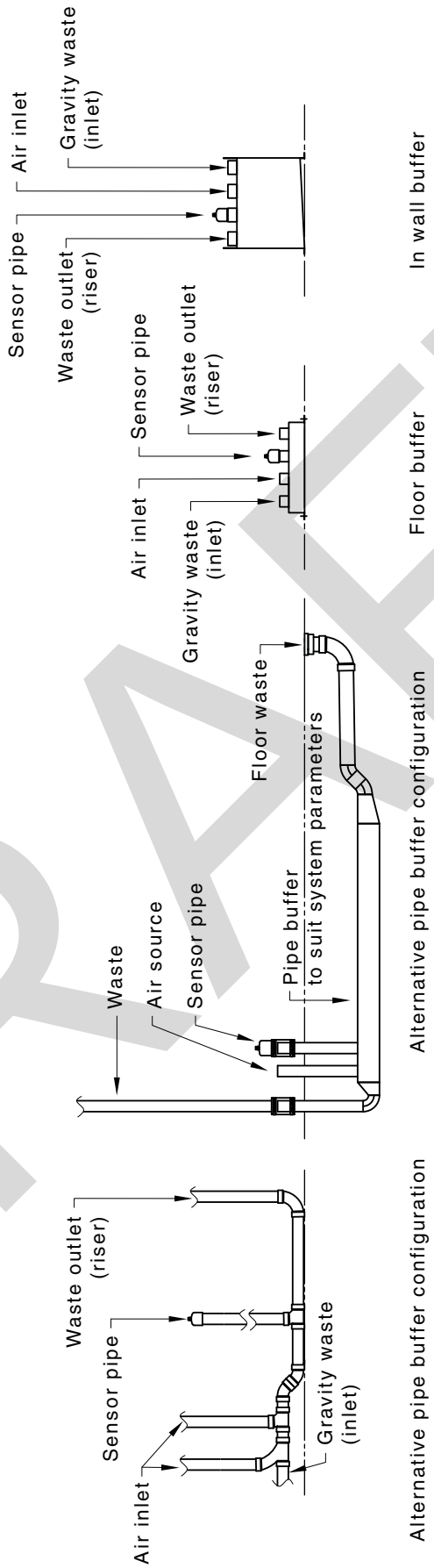

FIGURE 16.9.1 EXAMPLES OF BUFFERS

16.9.2 Sizing

Buffers shall be sized based on the maximum potential waste inflow from all fixtures that drain to the buffer in accordance with Table F1.

16.10 VACUUM SOIL FIXTURES

16.10.1 General

Vacuum soil fixtures shall—

(a) have access to ambient air; and

(b) be provided with access to ambient air via the secondary safety air inlet port(s).

Vacuum interface valves, vacuum soil fixture rinse valves, vacuum controller and actuator shall be accessible.

16.10.2 Vacuum soil fixture backflow prevention

Backflow prevention for vacuum soil fixture rinse valves shall be in accordance with AS/NZS 3500.1 Section 4.

16.11 VACUUM LIFT PIPE

16.11.1 Vacuum soil fixture lift pipe

Each vacuum soil fixture shall be provided with a vacuum lift pipe of DN 40–DN 50 in diameter, connected to a vacuum main or branch pipe (see Figure 16.11.1).

NOTES:

1 DN 40 is preferred when available in the material selected.

2 If a branch line has fixture connections from below and above it, or if there are fixture connections on the same branch line following a second stage lift, the lifts from below or those preceding the second stage lift, should include either a vacuum check valve or vacuum interface valve at the highest point of the lift upstream of the slope junction connection [see Figure 16.4.1(B)].

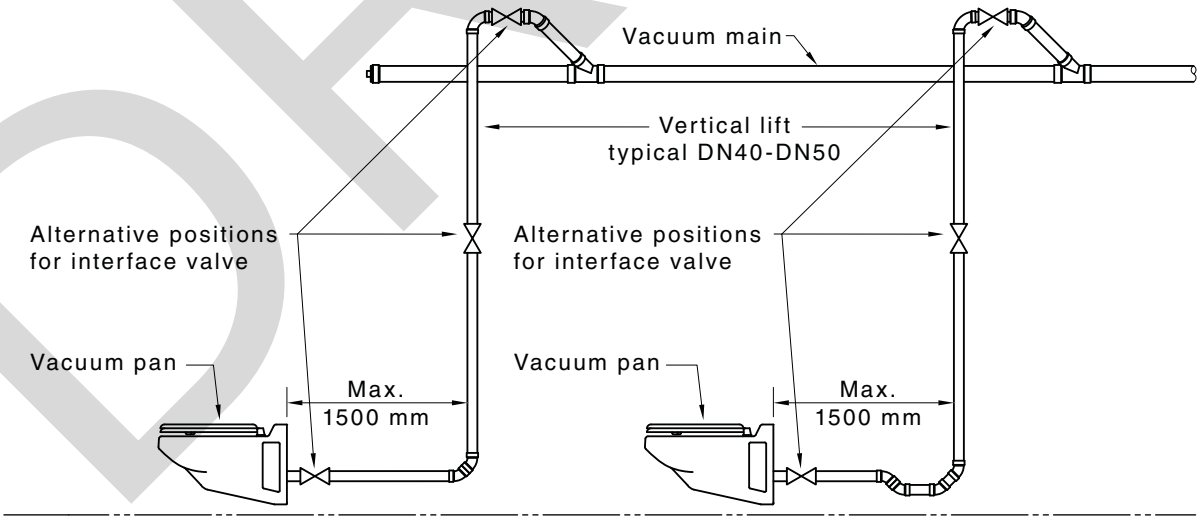

FIGURE 16.11.1 ALTERNATIVE LIFT PIPE FOR VACUUM SOIL FIXTURE

16.11.2 Vacuum lift pipe connected to Vacuum Automatic Interface Unit

Vacuum lift pipe connected to Vacuum Automatic Interface Unit shall have the following:

(a) A maximum horizontal distance from the Vacuum Automatic Interface Unit of 1500 mm.

(b) A maximum of one horizontal offset of up to 300 mm in any vacuum lift pipe and shall be achieved using two 45° bends.

(c) Offsets greater than 300 mm shall discharge horizontally and grade into a collection pocket before resuming vacuum lift.

(d) Diameters between DN 40–DN 50.

NOTES:

1 DN 40 is preferred when available in the material selected.

2 See Figure 16.11.2 for typical arrangements for vacuum automatic interface unit lift pipe.

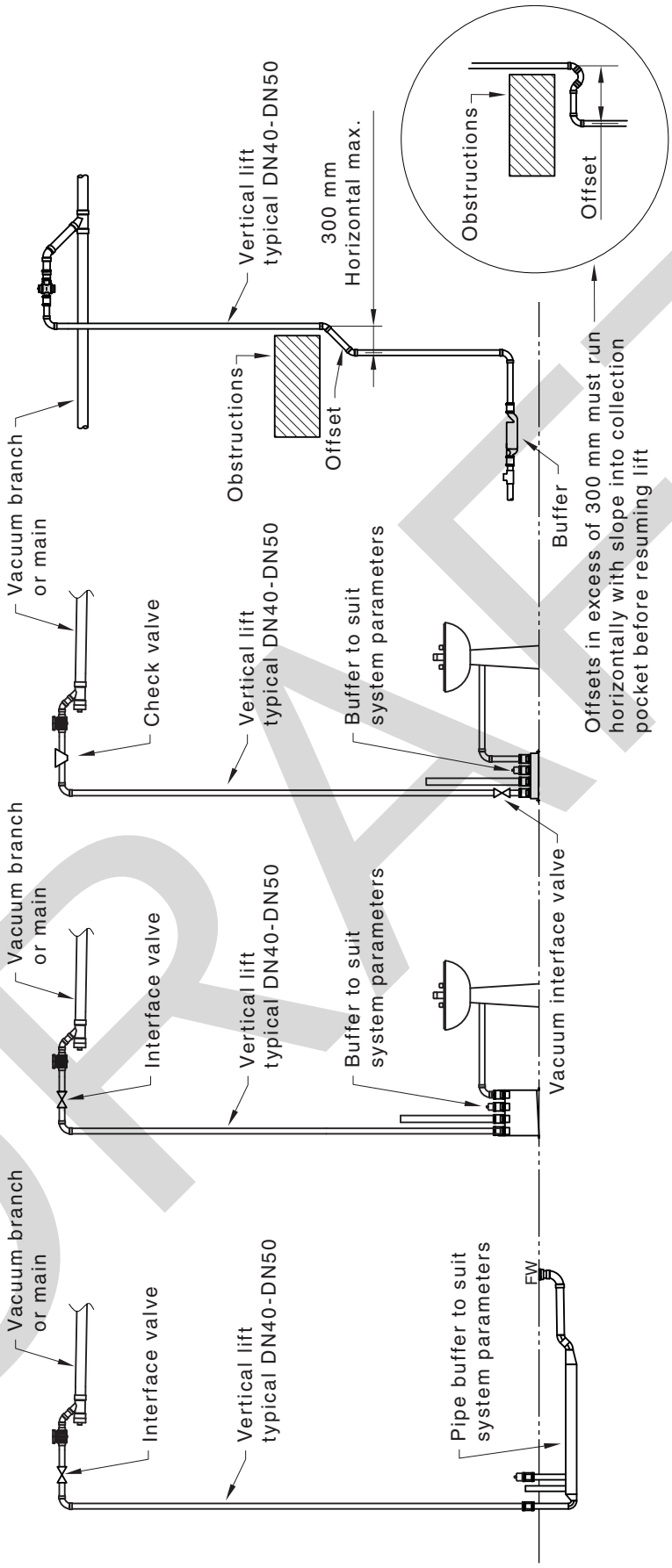

FIGURE 16.11.2 TYPICAL ARRANGEMENTS FOR VACUUM AUTOMATIC INTERFACE UNIT LIFT PIPE

16.11.3 Vacuum lift pipe connection to horizontal vacuum pipe

Vacuum lift pipes connecting to a horizontal vacuum branch or main pipeline shall—

(a) connect to the soffit of a horizontal vacuum pipe with a 45° junction in the direction of flow;

(b) not be connected to a horizontal vacuum pipe in a location that holds water;

(c) rise a minimum of 80 mm above soffit of the horizontal vacuum pipe it is connecting to; and

(d) not less than 150 mm between vacuum lift pipe connections on a common horizontal vacuum pipe.

NOTE: Connecting 45° junctions may be rolled to either side a maximum of 45° from the vertical plane (see View X-X of Figure 16.11.3).

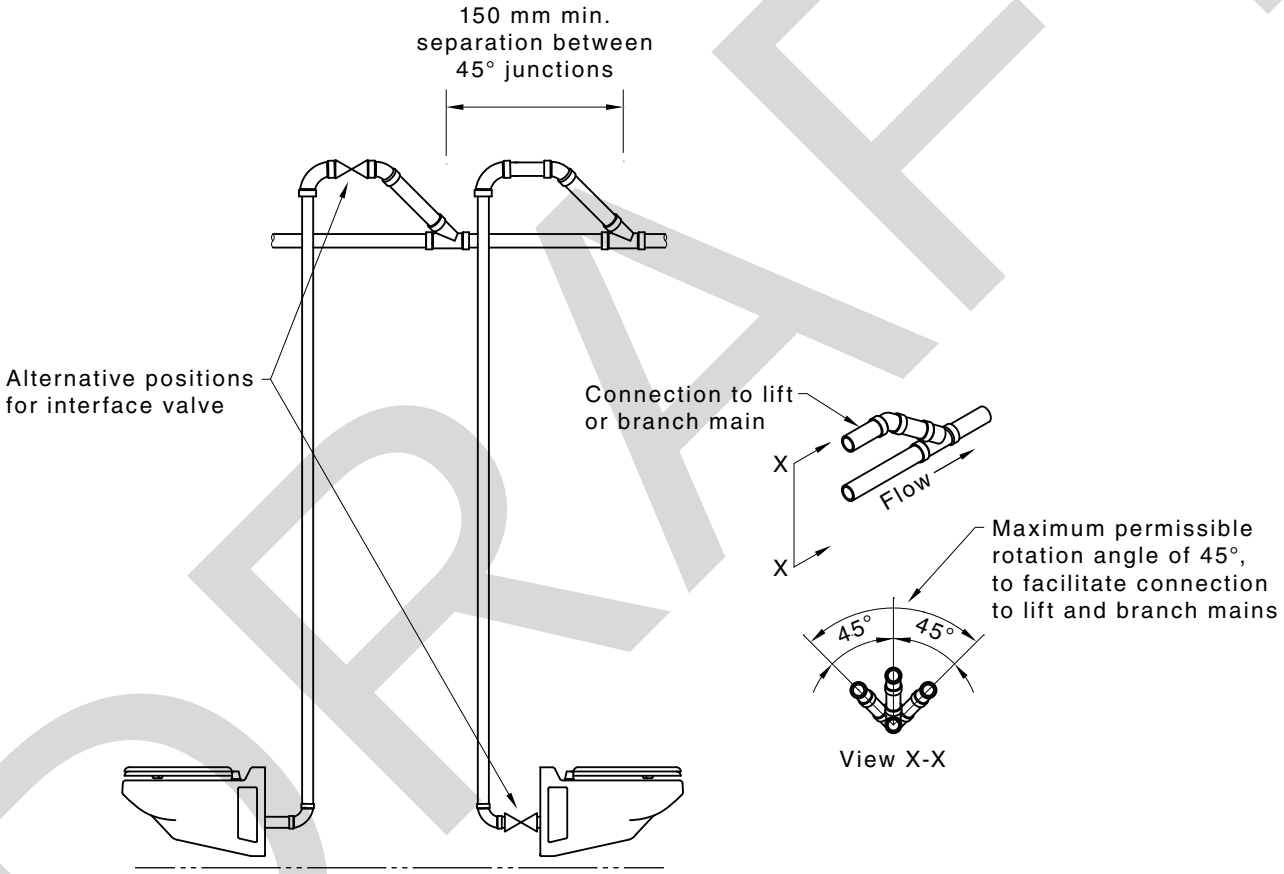

FIGURE 16.11.3 EXAMPLE OF VACUUM LIFT PIPES CONNECTING TO HORIZONTAL VACUUM PIPES

16.11.4 Two-stage lift pipe

When a branch line incorporates a second stage lift, the first stage lift shall be in accordance with Clauses 16.11.1, 16.11.2 and 16.11.3. The second stage lift pipe shall be—

(a) DN 40 or DN 50;

(b) vertical;

(c) a maximum of 2 m; and

(d) installed with a vacuum reforming pocket when greater than 900 mm [see Figure 16.11.4(A)].

The horizontal branch between the first stage lift and a second stage lift shall—

(i) include connections with a maximum vacuum loading unit value not exceeding 20 (see Table F2); and

(ii) not include a connection further than 20 m from the base of the second stage lift.

NOTE: A second stage lift of less than 900 mm in height does not require a vacuum reforming pocket [see Figure 16.11.4(B)].

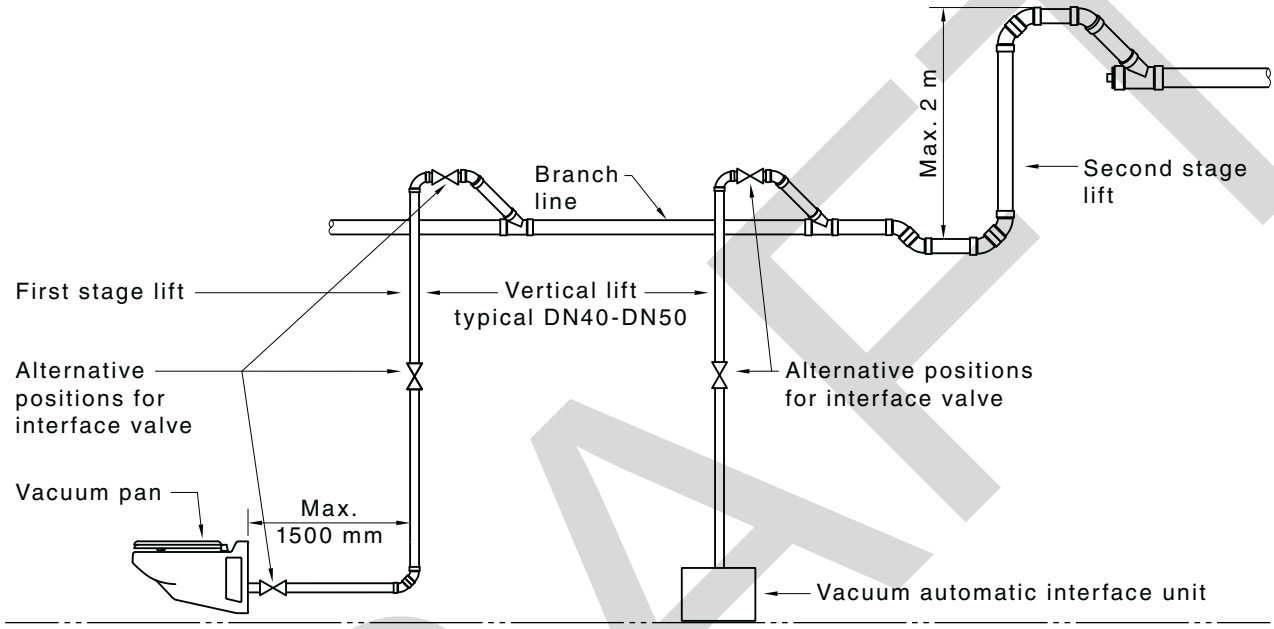

FIGURE 16.11.4(A) SECOND STAGE LIFT ABOVE 900 mm

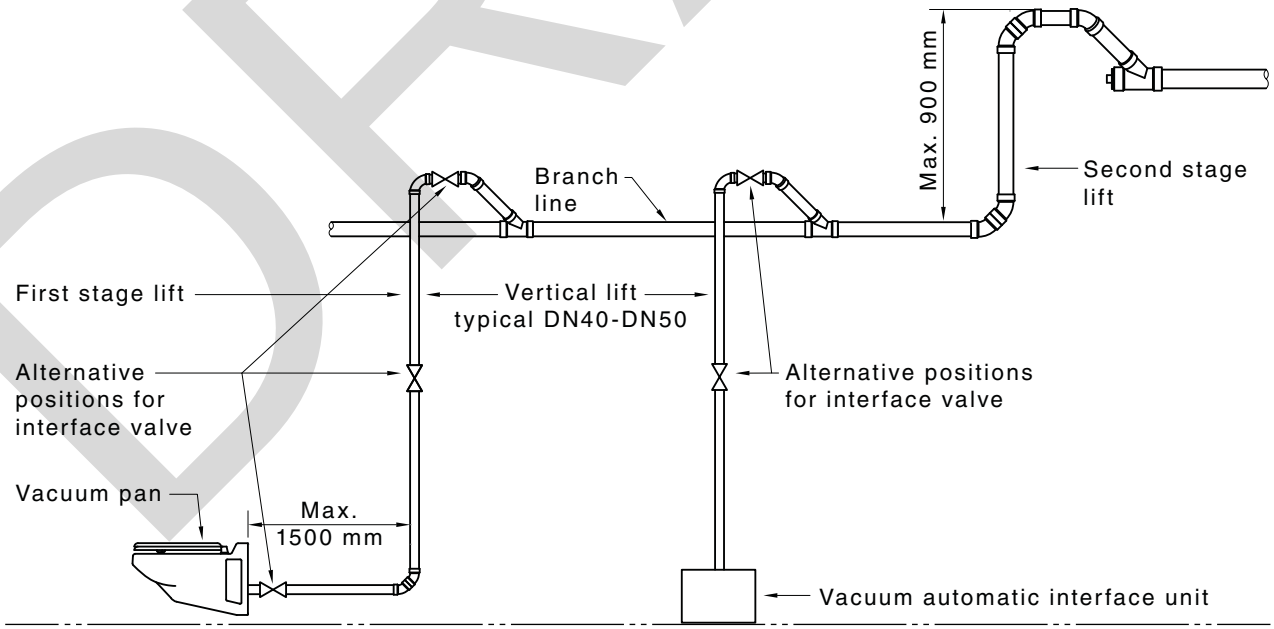

FIGURE 16.11.4(B) SECOND STAGE LIFT BELOW 900 mm

16.12 VACUUM REFORMING POCKET

16.12.1 General

Reforming pockets shall be installed at low points within the graded vacuum pipework.

Reforming pockets, either open type or closed type, shall be located within vacuum pipelines—

(a) at the base of every vertical lift (see Figure 16.12.2 for open type); and

(b) at maximum intervals in horizontal main and branch pipelines in accordance with Table 16.12.1.

NOTE: See Figures 16.12.2 and 16.12.3 for typical vacuum reforming pockets.

TABLE 16.12.1

MAXIMUM DISTANCE (m) BETWEEN REFORMING POCKETS IN HORIZONTAL PIPING

Type of vacuum pocket	Nominal size of vacuum pipeline DN				
	50	80	100	150	200
Open	55	55	60	60	80
Closed	20	25	30	30	30

16.12.2 Open type vacuum reforming pocket

Open type vacuum reforming pockets shall—

(a) be constructed of 45° bend and 45° junction;

(b) have a maximum height of 900 mm;

(c) be supported at each end of the vacuum reforming pocket; and

(d) include an inspection opening on the downstream end (top) of the vacuum reforming pocket.

NOTE: See Figure 16.12.2 for typical open type vacuum reforming pocket.

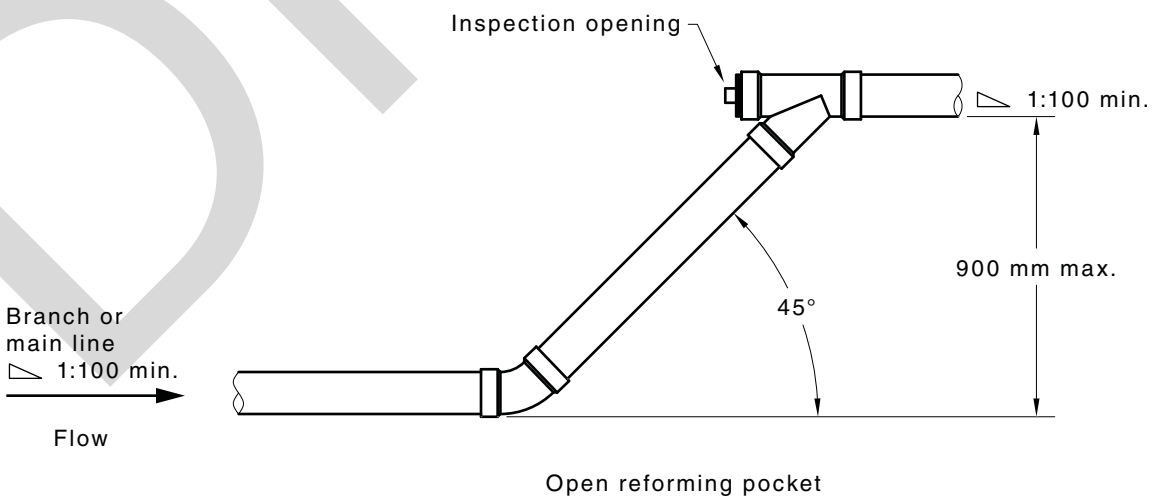

FIGURE 16.12.2 TYPICAL OPEN TYPE VACUUM REFORMING POCKET

16.12.3 Closed type vacuum reforming pocket

Closed type vacuum reforming pockets shall—

(a) be constructed of 45° bends and 45° junction;

(b) be a minimum of 600 mm in length;

(c) have a minimum waste water storage depth of 60 mm;

(d) include an inspection opening on the upstream end of the vacuum reforming pocket; and

(e) be supported at each end of the vacuum reforming pocket.

NOTE: See Figure 16.12.3 for typical closed type vacuum reforming pocket.

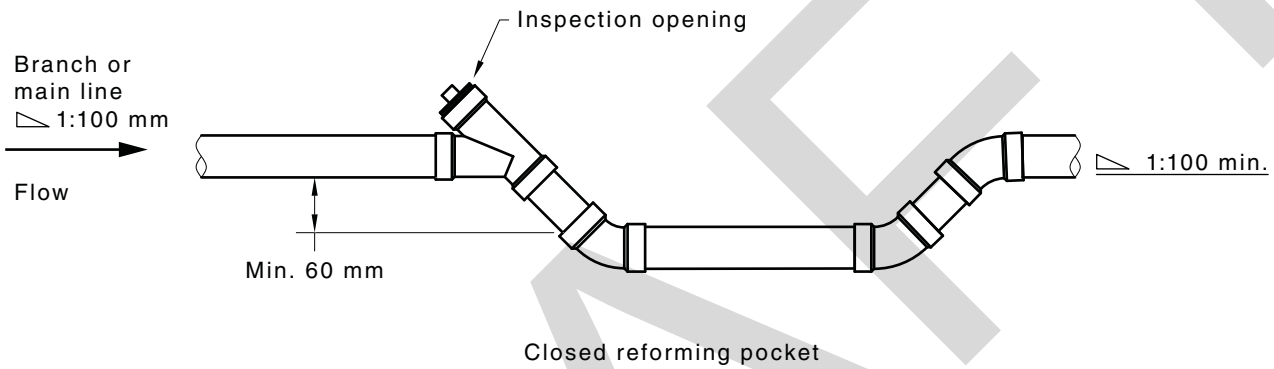

FIGURE 16.12.3 TYPICAL CLOSED TYPE VACUUM REFORMING POCKET

16.13 VACUUM BRANCH CONNECTIONS

Vacuum branch connections shall—

(a) connect from above to the soffit of a horizontal vacuum main pipe with a 45° junction in the direction of flow;

(b) not be located within 500 mm of a change of direction (bend) in the main;

(c) connect to the vacuum main dropper with a full bore isolation valve at each floor level for multi-level systems; and

(d) be braced bilaterally on each side of the 45° junction within 500 mm (see Figure 16.14.2).

NOTE: See Figure 16.13 for typical vacuum branch connections.

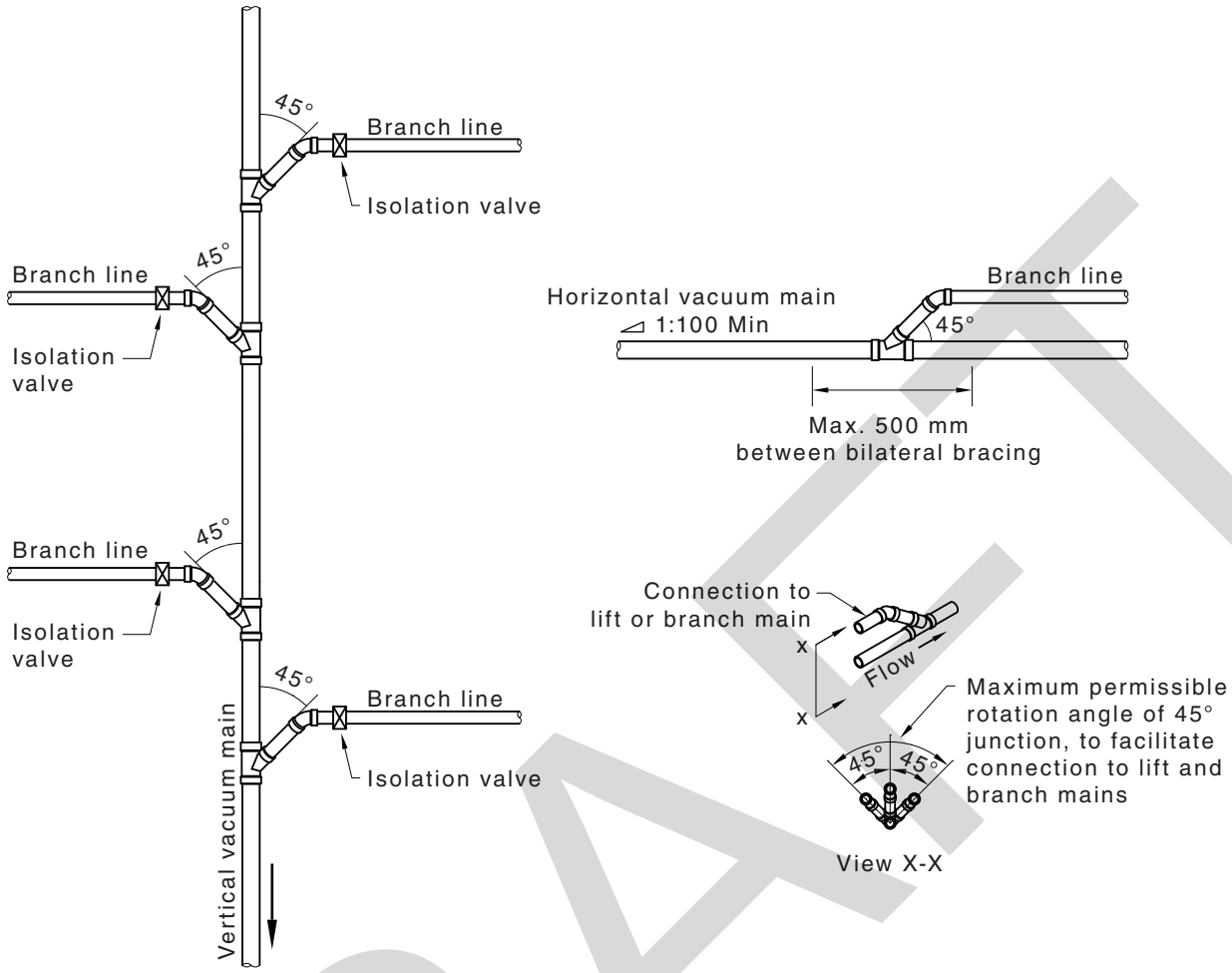

FIGURE 16.13 TYPICAL VACUUM BRANCH CONNECTIONS TO A VERTICAL OR HORIZONTAL VACUUM MAIN PIPELINE

16.14 VACUUM PIPES INSTALLED ABOVE GROUND

16.14.1 General

Vacuum drainage pipes shall be installed in accordance with Clauses 3.6, 10.2, 10.3, 10.4, 10.7, 10.8, 10.9, 10.10 and 10.13.

16.14.2 Bracketing and supports

In addition to Clause 16.14.1, vacuum drainage pipes shall have bilateral bracing within 500 mm each side of change of direction or branch connection (see Figure 16.14.2).

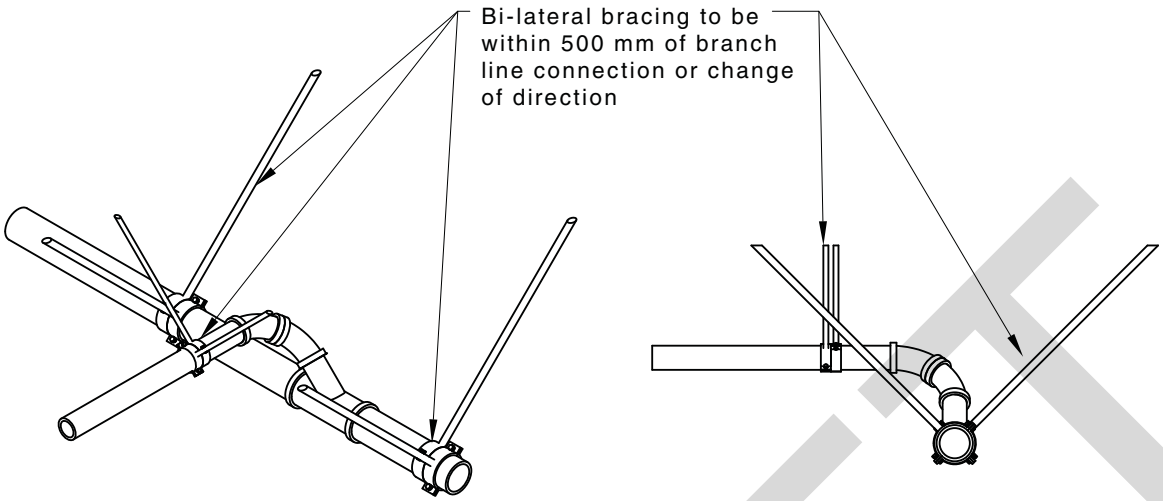

FIGURE 16.14.2 BILATERAL BRACING DETAILS

16.14.3 Stainless steel pipes

Brackets and supports for stainless steel pipes shall be installed at intervals in accordance with AS/NZS 3500.1, Clauses 5.6.3 and 5.6.4.

16.14.4 Securing of pipes and fittings

Any pipe or fitting that may be subjected to strain or torsion shall be positively fastened against twisting or any other movement.

16.15 VACUUM PIPES INSTALLED BELOW GROUND

16.15.1 General

Vacuum drainage pipes shall be installed in accordance with Clauses 3.4.4, 3.5, 3.6, 3.7, 3.8.1 and 3.8.2.

16.15.2 Anchor blocks

Anchor blocks shall be installed in accordance with Clause 3.4.4 at—

(a) all lifts in mainline exceeding 500 mm;

(b) changes of directions equal to or greater than 90°; and

(c) grades in excess of 20% (see Figure 3.4.4).

16.16 VACUUM TEST FOR VACUUM DRAINAGE SYSTEMS

16.16.1 Sealing inlets

All vacuum sanitary plumbing and drainage inlets, outlets and access openings shall be capped and sealed.

16.16.2 Vacuum test pressure

An initial vacuum test pressure of −55 ±5 kPa shall be applied to the section being tested. When −55 ±5 kPa has been reached, the vacuum pump and supply valve shall be shut off. The vacuum shall be allowed to stabilize for a minimum of 3 min while checking for leaks.

After the pressure has stabilized, commence the test by allowing the vacuum to fall to −50 kPa and then begin recording the time and drop in vacuum over the minimum test duration specified in Table 16.16.3.

16.16.3 Maximum vacuum drop

The section of sanitary plumbing or sanitary drainage being tested shall not have a drop in vacuum greater than −1 kPa over the minimum test duration specified in Table 16.16.3.

TABLE 16.16.3

VACUUM DRAINAGE SYSTEM VACUUM TESTING ACCEPTANCE TIMES FOR 1 kPa PRESSURE CHANGE

Pipe size DN	Test length m					
	50	100	150	200	250	300
	Minimum test duration min					
40	2	2	2	2	3	3
50	2	2	2	2	3	3
65	2	2	2	2	3	3
80	2	2	2	2	3	3
100	2	2	2	2	3	3
150	3	3	3	6	6	6
225	4	5	8	10	13	15
300	6	9	14	18	23	29

APPENDIX A

ACCEPTABLE PIPES AND FITTINGS

(Normative)

The following pipes and fittings are deemed to be acceptable solutions subject to the limitations of Clause 2.4:

(a) ABS non-pressure pipe and fittings in accordance with WSA 117.

(b) Cast iron fittings (grey cast iron) in accordance with AS/NZS 2544.

(c) Copper pipes and fittings in accordance with AS 1432 (A, B, C or D) or AS 3501.

(d) Copper alloy pipes in accordance with AS 3795.

(e) Copper and copper alloy fittings in accordance with AS 3688, AS 1589 and AS 3517.

(f) Ductile iron pipes and fittings in accordance with AS/NZS 2280.

(g) Fibre reinforced cement (FRC) pipes and fittings in accordance with AS 4139.

(h) Galvanized steel pipes and fittings in accordance with AS 1074 or NZS/BS 1387.

(i) Glass-filament-reinforced thermosetting plastic (GRP) pipe in accordance with AS 3571.1.

(j) High density polyethylene (PE-HD) pipes and fittings in accordance with AS/NZS 4401 for above ground only or AS/NZS 5065.

(k) High grade, low thermal expansion, borosilicate glass.

(l) Polypropylene pipes in accordance with AS/NZS 7671, for above ground use only or AS/NZS 5065.

(m) Stainless steel (SS) pipes and fittings in accordance with ASTM A270/A270M.

(n) Unplasticized polyvinyl chloride (PVC-U) pipes and fittings in accordance with AS/NZS 1260.

(o) Vitrified clay pipes and fittings in accordance with AS 1741 or BS EN 295-1.

APPENDIX B

MAXIMUM LENGTH m OF FIXTURE DISCHARGE PIPE WITHOUT VENTING

(Normative)

Fixture	Floor waste gully	Disconnector gully	Vented drain	Reduced velocity aerated stack system	Fully vented (modified)	Single stack	Single stack (modified)
	See Clause 4.6.7.3, Figure 4.6.7.1, Table 4.6.7.2 (see Notes 2 and 4)	**See Clause 4.6, Table 4.6.3**	**See Clause 3.9, Figure 3.9.3.2**	**See Clause 11.6**	**See Clauses 8.5.7.5.4, 8.5.7.5.5, Figure 8.5.7.5.4**	**See Clause 9.2, Figure 9.2.2, Table 9.5.1**	**See Clause 9.2.3, Figure 9.2.3, Table 9.5.1**
AUTOPSY TABLE—shall discharge through a flushing floor waste gully							
Untrapped DN 50 waste to flushing floor waste gully	1.2	NA	NA	NA	NA	NA	NA
Untrapped DN 50 waste to minimum DN 65 flushing floor waste gully	NA	NA	10.0	10.0	2.5	NA	NA
BAIN-MARIE and WATER BOILER							
Untrapped DN 40 waste	1.2	NA	NA	NA	NA	NA	NA
DN 40 Trap and waste	2.5	6.0	NA	NA	NA	NA	NA
DN 40 trap and DN 65 waste	NA	NA	10.0	10.0	2.5	NA	NA
BASIN							
DN 40 trap and waste	2.5	3.5	NA	NA	2.5	2.5	2.5
DN 32 outlet DN 40 trap and waste	2.5	3.5	NA	NA	NA	2.5	2.5
DN 32 trap and DN 40 waste (NZ only)	NA	3.5	NA	NA	NA	2.5	2.5
DN 40 trap and DN 65 waste	NA	10.0	10.0	10.0	10.0	2.5	2.5
DN 32 outlet DN 40 trap and DN 65 waste	NA	10.0	10.0	10.0	10.0	2.5	2.5

(*continued*)

104080_ASNZS_3500.2_ Working Draft_Whole.doc - 28/09/2017 8:12:30

Fixture	Floor waste gully	Disconnector gully	Vented drain	Reduced velocity aerated stack system	Fully vented (modified)	Single stack	Single stack (modified)
	See Clause 4.6.7.3, Figure 4.6.7.1, Table 4.6.7.2 (see Notes 2 and 4)	See Clause 4.6, Table 4.6.3	See Clause 3.9, Figure 3.9.3.2	See Clause 11.6	See Clauses 8.5.7.5.4, 8.5.7.5.5, Figure 8.5.7.5.4	See Clause 9.2, Figure 9.2.2, Table 9.5.1	See Clause 9.2.3, Figure 9.2.3, Table 9.5.1
BATH							
Untrapped DN 40 waste	1.2	NA	NA	NA	NA	NA	NA
DN 40/50 trap and waste	2.5	6.0	NA	NA	2.5	2.5	2.5
			10.0	10.0			
DN 40/50 trap and DN 65 waste	NA	10.0			2.5	2.5	2.5
BEDPAN and WASHER/STERILIZER							
DN 80 trap and waste	NA	NA	10.0	10.0	2.5	NA	NA
DN 100 trap and waste	NA	NA	10.0	10.0	6.0	NA	NA
BIDETTE/BIDET							
Untrapped DN 40 waste	1.2	NA	NA	NA	NA	NA	NA
DN 40 trap and waste	2.5	3.5	NA	NA	2.5	2.5	2.5
DN 32 outlet DN 40 trap and waste	2.5	3.5	NA	NA	2.5	2.5	2.5
DN 32 trap and DN 40 waste (NZ only)	NA	3.5	NA	NA	2.5	2.5	2.5
DN 40 trap and DN 65 waste	NA	10.0	10.0	10.0	2.5	2.5	2.5
DN 32 outlet DN 40 trap and DN 65 waste	NA	10.0	10.0	10.0	2.5	2.5	2.5
DENTAL UNITS Cuspidors DN 25 or DN 40 untrapped waste							
To sealed trap not smaller than DN 40	NA	6.0	NA	NA	NA	NA	NA
Evacuators (trapped tundish)	2.5	NA	NA	NA	NA	NA	NA
DN 40 trap and waste	1.2	6.0	NA	10.0	2.5	2.5	2.5
DN 25, DN 32 and DN 40 trap and waste (NZ only)	2.5	3.5	NA	NA	NA	NA	NA
DN 40 trap and DN 65 waste	NA	10.0	10.0	10.0	2.5	NA	NA
DRINKING FOUNTAINS and BUBBLERS							
DN 40 trap and waste	2.5	6.0	NA	NA	2.5	2.5	2.5
DN 25 and DN 32 trap and waste (NZ only)	2.5	3.5	NA	NA	NA	NA	NA
DN 40 trap and DN 65 waste	NA	10.0	10.0	10.0	2.5	2.5	2.5

(*continued*)

104080_ASNZS_3500.2_ Working Draft_Whole.doc - 28/09/2017 8:12:30

DRAFT ONLY

Fixture	Floor waste gully	Disconnector gully	Vented drain	Reduced velocity aerated stack system	Fully vented (modified)	Single stack	Single stack (modified)
	See Clause 4.6.7.3, Figure 4.6.7.1, Table 4.6.7.2 (see Notes 2 and 4)	**See Clause 4.6, Table 4.6.3**	**See Clause 3.9, Figure 3.9.3.2**	**See Clause 11.6**	**See Clauses 8.5.7.5.4, 8.5.7.5.5, Figure 8.5.7.5.4**	**See Clause 9.2, Figure 9.2.2, Table 9.5.1**	**See Clause 9.2.3, Figure 9.2.3, Table 9.5.1**
DISPOSAL UNITS							
Domestic food waste							
DN 40 trap and waste (NZ only)	NA	6.0	NA	NA	2.5	NA	NA
DN 50 trap and waste (Australia only)	NA	6.0	NA	NA	2.5	NA	NA
DN 50 trap and waste (NZ only)	NA	10.0	NA	NA	2.5	NA	NA
DN 50 trap and DN 65 waste	NA	10.0	10.0	10.0	2.5	NA	NA
Commercial food waste							
DN 50 trap and waste	NA	6.0	NA	NA	2.5	NA	NA
DN 50 trap and DN 65 waste	NA	10.0	10.0	10.0	2.5	NA	NA
Sanitary napkin							
DN 50 trap and DN 65 waste	NA	NA	10.0	10.0	2.5	NA	NA
DISCONNECTOR GULLY TRAPS							
DN 100 outlet	NA	NA	10.0	10.0	6.0	NA	NA
FLOOR WASTE GULLY TRAPS							
DN 50 outlet	NA	6.0	NA	NA	2.5	2.5	2.5
DN 65/80 outlet	NA	10.0	10.0	10.0	2.5	2.5	2.5
DN 100 outlet	NA	10.0	10.0	10.0	6.0	6.0	6.0
SHOWERS 80/100 mm grates							
Untrapped DN 40 waste	1.2	NA	NA	NA	NA	NA	NA
DN 40/50 trap and waste	2.5	6.0	NA	NA	2.5	2.5	2.5
DN 40/50 trap and DN 65 waste	NA	10.0	10.0	10.0	2.5	2.5	2.5
2–3 showers to graded channel with DN 50 trap and waste	NA	6.0	NA	NA	2.5	NA	NA
4–6 showers to graded channel with DN 65 trap and waste	NA	10.0	10.0	10.0	2.5	NA	NA

(*continued*)

104080_ASNZS_3500.2_ Working Draft_Whole.doc - 28/09/2017 8:12:30

DRAFT ONLY

Fixture	Floor waste gully	Disconnector gully	Vented drain	Reduced velocity aerated stack system	Fully vented (modified)	Single stack	Single stack (modified)
	See Clause 4.6.7.3, Figure 4.6.7.1, Table 4.6.7.2 (see Notes 2 and 4)	See Clause 4.6, Table 4.6.3	See Clause 3.9, Figure 3.9.3.2	See Clause 11.6	See Clauses 8.5.7.5.4, 8.5.7.5.5, Figure 8.5.7.5.4	See Clause 9.2, Figure 9.2.2, Table 9.5.1	See Clause 9.2.3, Figure 9.2.3, Table 9.5.1
SINKS							
Kitchen							
Untrapped DN 40 waste	NA	NA	NA	NA	NA	NA	NA
DN 40 trap and waste (NZ only)	NA	6.0	NA	NA	2.5	2.5	2.5
DN 50 trap and waste	NA	6.0	NA	NA	2.5	2.5	2.5
DN 40 trap and DN 65 waste (NZ only)	NA	10.0	10.0	10.0	2.5	2.5	2.5
DN 50 trap and DN 65 waste	NA	10.0	10.0	10.0	2.5	2.5	2.5
Bar (domestic)							
Untrapped DN 40 waste	1.2	NA	NA	NA	NA	NA	NA
DN 40 trap and waste	2.5	6.0	NA	NA	2.5	2.5	2.5
DN 40 trap and DN 65 waste	NA	10.0	10.0	10.0	2.5	NP	NA
Bar (commercial)							
Untrapped DN 50 waste	1.2	NA	NA	NA	NA	NA	NA
DN 50 trap and waste	2.5	6.0	NA	10.0	2.5	NA	NA
DN 50 trap and DN 65 waste	NA	10.0	10.0	10.0	2.5	NA	NA
(Cleaner's)							
Untrapped DN 40 waste (NZ only)	1.2	NA	NA	NA	NA	NA	NA
Untrapped DN 50 waste	1.2	NA	NA	NA	NA	NA	NA
DN 40 trap and waste (NZ only)	2.5	6.0	NA	NA	2.5	2.5	2.5
DN 50 trap and waste	2.5	6.0	NA	NA	2.5	2.5	2.5
DN 40 trap and DN 65 waste (NZ only)	NA	10.0	10.0	10.0	2.5	2.5	2.5
DN 50 trap and DN 65 waste	NA	10.0	10.0	10.0	2.5	2.5	2.5
Pot or utility							
DN 50 trap and waste	NA	6.0	NA	NA	2.5	NA	NA
DN 50 trap and DN 65 waste	NA	10.0	10.0	10.0	2.5	NA	NA

(*continued*)

104080_ASNZS_3500.2_ Working Draft_Whole.doc - 28/09/2017 8:12:30

DRAFT ONLY

Fixture	Floor waste gully	Disconnector gully	Vented drain	Reduced velocity aerated stack system	Fully vented (modified)	Single stack	Single stack (modified)
	See Clause 4.6.7.3, Figure 4.6.7.1, Table 4.6.7.2 (see Notes 2 and 4)	See Clause 4.6, Table 4.6.3	See Clause 3.9, Figure 3.9.3.2	See Clause 11.6	See Clauses 8.5.7.5.4, 8.5.7.5.5, Figure 8.5.7.5.4	See Clause 9.2, Figure 9.2.2, Table 9.5.1	See Clause 9.2.3, Figure 9.2.3, Table 9.5.1
Laboratory							
DN 50 trap and waste	NA	6.0	NA	NA	2.5	NA	NA
DN 50 trap and DN 65 waste	NA	10.0	10.0	10.0	2.5	NA	NA
SLOP HOPPER							
DN 100 trap and waste	NA	NA	10.0	10.0	6.0	NA	NA
SWIMMING POOLS							
Limits determined by network utility operator (see Note 5)							
DN 40 waste	NA	Unlimited	NA	NA	NA	NA	NA
TROUGHS							
Ablution							
Untrapped DN 40 waste	1.2	NA	NA	NA	NA	NA	NA
Untrapped DN 50 waste	1.2	NA	NA	NA	NA	NA	NA
DN 40 trap and waste	2.5	6.0	NA	NA	2.5	NA	NA
DN 50 trap and waste	2.5	6.0	NA	NA	2.5	NA	NA
DN 40 trap and DN 65 waste	NA	10.0	10.0	10.0	2.5	NA	NA
DN 50 trap and DN 65 waste	NA	10.0	10.0	10.0	2.5	NA	NA
Laundry							
Untrapped DN 40 waste	1.2	NA	NA	NA	NA	NA	NA
Untrapped DN 50 waste	1.2	NA	NA	NA	NA	NA	NA
DN 40 trap and waste	2.5	6.0	NA	NA	2.5	2.5	2.5
DN 50 trap and waste	2.5	6.0	NA	NA	2.5	2.5	2.5
DN 40 trap and DN 65 waste	NA	10.0	10.0	10.0	2.5	2.5	2.5
DN 50 trap and DN 65 waste	NA	10.0	10.0	10.0	2.5	2.5	2.5

(*continued*)

104080_ASNZS_3500.2_ Working Draft_Whole.doc - 28/09/2017 8:12:30

DRAFT ONLY

Fixture	Floor waste gully	Disconnector gully	Vented drain	Reduced velocity aerated stack system	Fully vented (modified)	Single stack	Single stack (modified)
	See Clause 4.6.7.3, Figure 4.6.7.1, Table 4.6.7.2 (see Notes 2 and 4)	**See Clause 4.6, Table 4.6.3**	**See Clause 3.9, Figure 3.9.3.2**	**See Clause 11.6**	**See Clauses 8.5.7.5.4, 8.5.7.5.5, Figure 8.5.7.5.4**	**See Clause 9.2, Figure 9.2.2, Table 9.5.1**	**See Clause 9.2.3, Figure 9.2.3, Table 9.5.1**
URINALS							
Wall hung							
DN 40 trap and waste	NA	NA	NA	NA	2.5	2.5	2.5
DN 50 trap and waste	NA	NA	NA	NA	2.5	2.5	2.5
DN 40 trap and DN 65 waste	NA	NA	10.0	10.0	2.5	2.5	2.5
DN 50 trap and DN 65 waste	NA	NA	10.0	10.0	2.5	2.5	2.5
Slab (see Note 8)							
Up to 5 m in length minimum DN 65 trap and waste (see Note 6)	NA	NA	10.0	10.0	2.5	NA	NA
Waterless urinals (see Clause 11.24.2.3)							
DN 40 trap and DN 65 waste	NA	NA	10.0	10.0	2.5	2.5	2.5
DN 50 trap and DN 65 waste	NA	NA	10.0	10.0	2.5	2.5	2.5
WASHING MACHINES (Domestic clothes) hose connecting to:							
Untrapped DN 40 waste	1.2	NA	NA	NA	NA	NA	NA
Untrapped DN 50 waste	1.2	NA	NA	NA	NA	NA	NA
DN 40 trap and waste	2.5	6.0	NA	NA	2.5	2.5	2.5
DN 50 trap and waste	2.5	6.0	NA	NA	2.5	2.5	2.5
DN 40 trap and DN 65 waste	NA	10.0	10.0	10.0	2.5	2.5	2.5
DN 50 trap and DN 65 waste	NA	10.0	10.0	10.0	2.5	2.5	2.5

(*continued*)

104080_ASNZS_3500.2_ Working Draft_Whole.doc - 28/09/2017 8:12:30

DRAFT ONLY

Fixture	Floor waste gully	Disconnector gully	Vented drain	Reduced velocity aerated stack system	Fully vented (modified)	Single stack	Single stack (modified)
	See Clause 4.6.7.3, Figure 4.6.7.1, Table 4.6.7.2 (see Notes 2 and 4)	See Clause 4.6, Table 4.6.3	See Clause 3.9, Figure 3.9.3.2	See Clause 11.6	See Clauses 8.5.7.5.4, 8.5.7.5.5, Figure 8.5.7.5.4	See Clause 9.2, Figure 9.2.2, Table 9.5.1	See Clause 9.2.3, Figure 9.2.3, Table 9.5.1
Commercial clothes laundrette							
Untrapped DN 50 waste	NA	NA	NA	NA	NA	NA	NA
DN 50 trap and waste	NA	6.0	NA	NA	2.5	NA	NA
DN 50 trap and DN 65 waste	NA	10.0	10.0	10.0	2.5	NA	NA
Industrial laundry							
To graded channel and 225 mm silt trap with DN 100 outlet	NA	10.0	NA	NA	NA	NA	NA
(Domestic dishwasher) waste outlet hose connecting to riser of kitchen sink trap—							
Above the water seal of a DN 50 trap and waste	NA	6.0	NA	NA	2.5	2.5	2.5
DN 40 trap and waste	NA	6.0	NA	NA	2.5	2.5	2.5
DN 40 trap and DN 65 waste	NA	10.0	10.0	10.0	2.5	2.5	2.5
Commercial dishwasher (see Note 5)	NP	10.0	NA	NA	NA	NA	NA
Glass							
Untrapped DN 50 waste	1.2	NA	NA	NA	NA	NA	NA
DN 50 trap and waste	2.5	6.0	NA	NA	2.5	NA	NA
DN 50 trap and DN 65 waste	NA	10.0	10.0	10.0	2.5	NA	NA
COMBINATION PAN ROOM SINK							
DN 100 outlet	NA	NA	10.0	10.0	6.0	NA	NA

(*continued*)

104080_ASNZS_3500.2_ Working Draft_Whole.doc - 28/09/2017 8:12:30

DRAFT ONLY

Fixture	Floor waste gully	Disconnector gully	Vented drain	Reduced velocity aerated stack system	Fully vented (modified)	Single stack	Single stack (modified)
	See Clause 4.6.7.3, Figure 4.6.7.1, Table 4.6.7.2 (see Notes 2 and 4)	**See Clause 4.6, Table 4.6.3**	**See Clause 3.9, Figure 3.9.3.2**	**See Clause 11.6**	**See Clauses 8.5.7.5.4, 8.5.7.5.5, Figure 8.5.7.5.4**	**See Clause 9.2, Figure 9.2.2, Table 9.5.1**	**See Clause 9.2.3, Figure 9.2.3, Table 9.5.1**
POTATO PEELER—shall discharge through a peel trap							
DN 50 trap and waste	NA	6.0	NA	NA	2.5	NA	NA
DN 50 trap and DN 65 waste	NA	10.0	10.0	10.0	2.5	NA	NA
RANGES OF FIXTURES (see Note 6)							
5 × basins DN 40 traps and wastes connected to a DN 50 common discharge pipe	NA	NA	NA	NA	NA	4.5	4.5
5 × water closets DN 100 outlets connected to a DN 100 common discharge pipe	NA	NA	NA	10.0	NA	10.0	10.0
5 × wall-hung urinals DN 50 traps connected to a DN 65 common discharge pipe	NA	NA	NA	10.0	NA	10.0	10.0
REFRIGERATED CABINETS and STERILIZERS							
Untrapped minimum DN 40 waste	1.2	NA	NA	NA	NA	NA	NA
Minimum DN 40 trap and waste	2.5	6.0	NA	NA	2.5	NA	NA
DN 40 trap and DN 65 waste	NA	10.0	10.0	10.0	2.5	NA	NA
STERILIZERS							
Untrapped minimum DN 40 waste	1.2	NA	NA	NA	NA	NA	NA
Minimum DN 40 trap and waste	2.5	6.0	NA	NA	2.5	NA	NA
DN 40 trap and DN 65 waste	NA	10.0	10.0	10.0	2.5	NA	NA

(*continued*)

104080_ASNZS_3500.2_ Working Draft_Whole.doc - 28/09/2017 8:12:30

DRAFT ONLY

Fixture	Floor waste gully	Disconnector gully	Vented drain	Reduced velocity aerated stack system	Fully vented (modified)	Single stack	Single stack (modified)
	See Clause 4.6.7.3, Figure 4.6.7.1, Table 4.6.7.2 (see Notes 2 and 4)	**See Clause 4.6, Table 4.6.3**	**See Clause 3.9, Figure 3.9.3.2**	**See Clause 11.6**	**See Clauses 8.5.7.5.4, 8.5.7.5.5, Figure 8.5.7.5.4**	**See Clause 9.2, Figure 9.2.2, Table 9.5.1**	**See Clause 9.2.3, Figure 9.2.3, Table 9.5.1**
TUNDISHES (minor discharge)							
Untrapped DN 25 to DN 50 waste	10.0	NA	NA	NA	NA	NA	NA
DN 40 trap and waste	10.0	6.0	NA	NA	2.5	2.5	2.5
DN 40 trap and DN 65 waste	10.0	10.0	10.0	10.0	2.5	2.5	2.5
WATER CLOSET PAN							
DN 100 outlet	NA	NA	10.0	10.0	6.0	6.0	6.0
WOK BURNERS							
(Approx. 1 fixture unit per burner) (see Note 5)							
Minimum DN 50 trap and waste	NA	6.0	NA	NA	NA	NA	NA
DN 50 trap and DN 65 waste	NA	10.0	10.0	10.0	2.5	NA	NA
COMBINATION OVENS and STEAMERS (see Notes 5 and 7)							
DN 50 trap and waste	NA	6.0	NA	NA	NA	NA	NA
DN 50 trap and DN 65 waste	NA	10.0	10.0	10.0	2.5	NA	NA

LEGEND:
NA = Not allowed

NOTES:

1 For the topmost fixture to fully vented modified stacks, see Clause 8.5.1.2.

2 Waste pipes to floor waste gullies shall not be extended by venting.

3 'Minor discharge', approximately a minimum of 1 L per day and not more than 20 L per day.

4 For submerged-inlet floor waste gullies the requirements are specified in Table 4.6.7.2.

5 For connections of fixtures in range, see Clause 9.5.10.

6 Over 5 m of urinal wall additional outlets required.

7 Discharge through a DN 100 tundish.

8 See Clause 9.4.2, Item (a) for connection of slab type urinals to single stacks.

104080_ASNZS_3500.2_ Working Draft_Whole.doc - 28/09/2017 8:12:30

DRAFT ONLY

APPENDIX C

PIPE GRADES CONVERSION TABLE

(Informative)

Conversion of pipe grades	
Percentage (%)	**Ratio (gradient)**
20.00	1 in 5
6.65	1 in 15
5.00	1 in 20
3.35	1 in 30
2.50	1 in 40
2.00	1 in 50
1.65	1 in 60
1.45	1 in 70
1.25	1 in 80
1.10	1 in 90
1.00	1 in 100
0.85	1 in 120
0.70	1 in 140
0.65	1 in 150
0.60	1 in 160
0.50	1 in 200
0.40	1 in 250
0.35	1 in 300

NOTE: The percentage figures have been rounded off to the nearest 0.05%.

APPENDIX D

CONDUCT OF INSPECTIONS BY THE USE OF CLOSED CIRCUIT TELEVISION (CCTV)

(Informative)

D1 GENERAL

CCTV inspections are effective ways to identify the structural condition of sanitary plumbing and drainage installations and to identify and report on any specific defects or features.

Inspections should be conducted under no-flow conditions, i.e. the sanitary plumbing system is not being used so that the flow (water) level may be measured and reported.

Typical applications for CCTV surveys include—

(a) inspection of drains, sewers and pipelines;

(b) inspection of deep shafts;

(c) inspection of ducts;

(d) monitoring specialist repair works in sewers; and

(e) surveys of industrial process pipelines.

Where required, specialized instruments, apparatus and/or software should be used to facilitate the survey. Hardware and software used in measuring the parameters have to be correctly calibrated for each application using the manufacturer's recommended methods.

NOTE: It is recommended that CCTV operators are trained to conduct CCTV inspections and investigations.

D2 OPERATOR'S REPORT

The operator should provide a written report.

The report should contain, but not be limited to, the following:

(a) Location of the sanitary plumbing and drainage installation.

(b) The date(s) of inspections.

(c) Details as required, to identify the drain(s) inspected.

(d) Size and type of material installed.

(e) Condition of the sanitary plumbing and drainage installation including the location and characteristics of reportable features such as defects.

(f) Where required, a determination for acceptance.

APPENDIX E

CLASSIFICATION OF SOILS

(Informative)

Sanitary plumbing and drainage systems are required to be designed and installed to avoid the likelihood of damage from ground movement. AS 2870 the Standard for Residential Slabs and Footings places emphasis on design for reactive soil sites susceptible to ground movement due to moisture changes. It takes into account—

(a) swelling and shrinkage movements of reactive soils due to moisture changes;

(b) settlement of compressible soils or fill;

(c) distribution to the foundation of the applied loads; and

(d) tolerance of the superstructure and services to movement.

AS 2870 provides for the classification of the building sites and the design of footing systems. It requires all sites to be classified with respect to soil movement. The site classifications are contained within this Standard.

The site classifications M, M-D, H1, H1-D, H2, H2-D, E and E-D are for moderately, highly and extremely reactive soils.

Classes A and S are considered to not be problematic.

Plumbing and drainage requirements for P classified sites should be determined by a suitably qualified and experienced expert.

APPENDIX F

SIZING VACUUM DRAINAGE PIPES AND BUFFERS

(Normative)

F1 GENERAL

The following sizing methods given in this Appendix in Tables F1 to F4 shall be used for buffer and pipe sizing.

TABLE F1

MAXIMUM INFLOW (L/s) TO A SINGLE VACUUM BUFFER

Buffer volume L	Maximum inflow L/s
5	0.25
10	1.25
20	2.5
50	3.5
100	4.5

NOTE: For a bath, a laundry tub, a sink or similar appliance the average discharge rate in L/s at which the appliance will empty should be determined to calculate the buffer size. This will typically be the rate of discharge when a drain plug is removed from a full appliance. This can be calculated by dividing the volume (L) by the total number of seconds taken to empty the full appliance with waste outlet fitted.

TABLE F2

VACUUM LOADING UNITS (VLU)

Vacuum fixture	Vacuum loading units (VLU)
5 L buffer	4
10 L buffer	8
20 L buffer	12
50 L buffer	25
100 L buffer	60
Vacuum water closet pan	4
Vacuum bedpan washer	4
Vacuum slop hopper	4

TABLE F3

MAINS AND BRANCH LINES SIZING

Nominal size of vacuum pipeline DN	Maximum vacuum loading units (VLU)
50	100
65	400
80	600
100	1 200
150	7 000
200	20 000

TABLE F4

MAXIMUM NUMBER OF VACUUM TOILETS CONNECTED TO MAIN AND BRANCH PIPELINES

Nominal size of vacuum pipeline DN	Maximum vacuum loading units (VLU)
50	25
65	100
80	125
100	225
150	500
200	1500

APPENDIX G

RENOVATION OF SANITARY PLUMBING AND DRAINAGE SYSTEMS USING STRUCTURAL PLASTICS LINERS

(Normative)

G1 GENERAL

Renovation of sanitary plumbing and drainage systems using cured-in-place pipe (CIPP) liners (see Clause 3.16.3.1) and other structural plastics liners (see Clause 3.16.3.2) can be performed on complete systems or as a repair of a section. The repair shall extend a minimum of 400 mm beyond the damaged section of pipe in both directions with the minimum repair length to be 800 mm. Where a junction is within the repair length, all arms of the junction shall be included in the repair (see Figure G1).

NOTES:

1 A structural plastics liner may bridge a gap caused by damage to an existing pipeline.

2 The internal diameter of the host pipe will be reduced by twice the wall thickness of the liner. It may be necessary to consider the affect this has on the hydraulic capacity of the piping system, especially for very small diameter pipes.

3 There may be limitations on the use of some lining materials in trade waste applications.

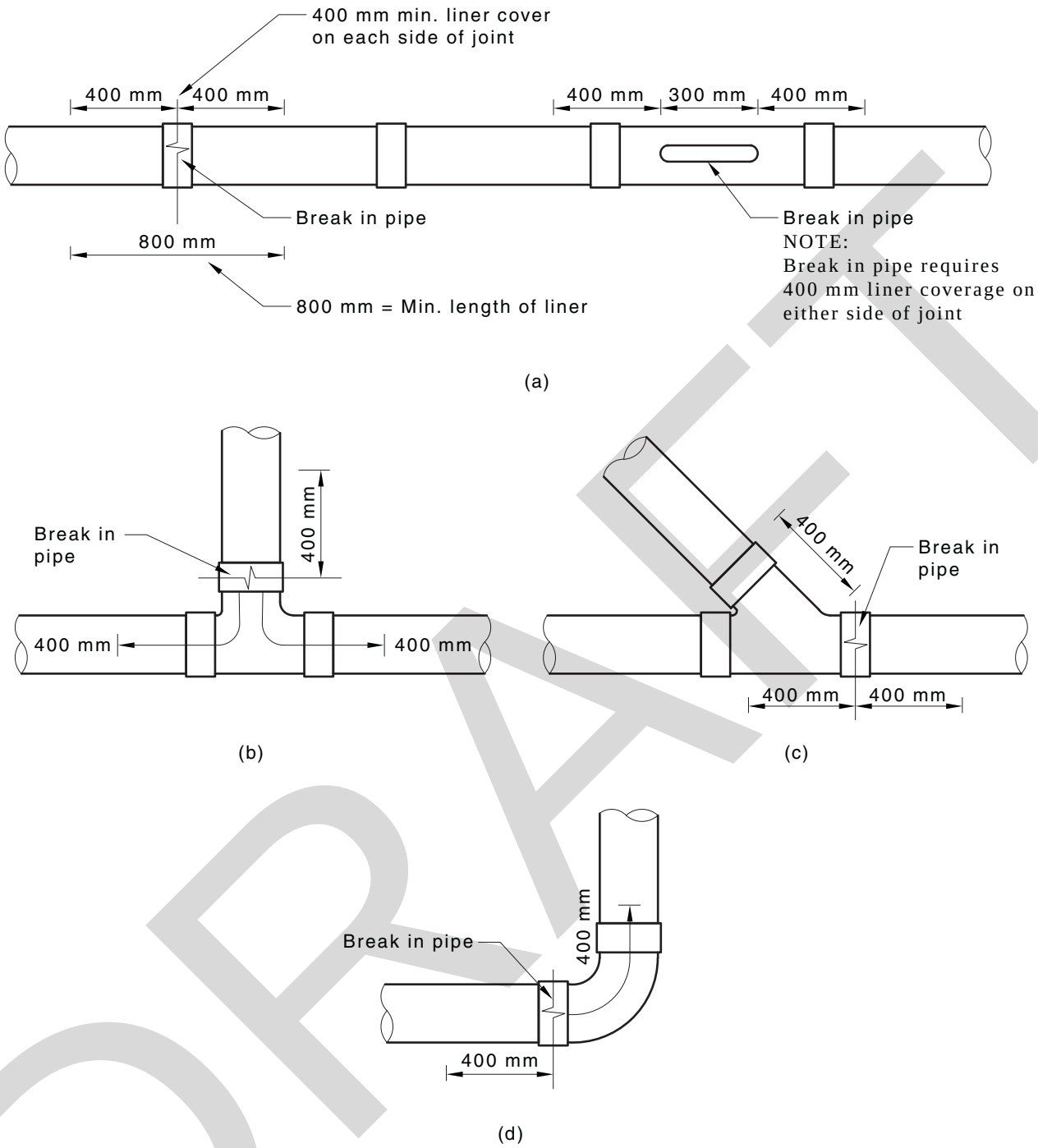

FIGURE G1 MINIMUM LENGTH OF LINER FOR A DAMAGED PIPE OR FITTING

G2 LINER

CIPP liners shall conform with WMTS-518.

When measured in accordance with ISO 7685 for thermosets (CIPP), or with ISO 9969 for thermoplastics, the minimum ring stiffness of an unsupported structural liner for below ground applications shall be 4 kN/m/m. For above ground applications the minimum pipe stiffness of the unsupported liner shall be in accordance with the appropriate product specification.

G3 RELINING PROCEDURE

The pipe system shall be prepared for relining as follows:

(a) A CCTV inspection shall be performed to determine whether the pipe system is in a condition suitable for renovation and to identify the location of all relevant junctions.

(b) The pipe system shall be cleaned with a high pressure jetter.

(c) When the renovation is to be performed using a CIPP liner, the internal surface of non-porous host pipes (e.g. PVC or PE) shall be roughened or mechanically etched using sanding discs or wire brushes.

(d) The system shall be flushed to remove any debris.

(e) A second CCTV inspection shall be undertaken to ensure the pipe system is ready for the liner to be installed.

(f) Insert the liner.

(g) For CIPP liners, the resin shall be cured (i.e. cross-linked) by heat, U.V. radiation, ambient temperature or other means.

(h) For liners other than CIPP, the ends of the liner shall be anchored and sealed in such a way as to provide a watertight connection to the existing pipeline. The method of anchoring the pipe ends shall take account of the residual effects of installation, especially unrelieved winching and thermal stresses, and be capable of resisting the associated longitudinal forces without movement, i.e. contraction.

(i) A third CCTV inspection shall be performed to ensure the liner has been correctly installed.

(j) Reinstate the laterals by opening to the full internal diameter of the lateral. Alternatively, install a one piece lateral junction liner.

(k) Flush the renovated pipe system.

(l) A fourth CCTV inspection shall be performed to confirm the integrity of the renovation and satisfactory condition of all laterals.

NOTE: Testing in accordance with Section 15 should be undertaken particularly in major or complete system renovations.

BIBLIOGRAPHY

AS
1428 Design for access and mobility (series)

2870 Residential slabs and footings

NZS
4404 Land development and subdivision infrastructure

SA TS
100 Vacuum WC pans and interface valves intended for use with vacuum drainage systems and designs

ISO
11295 Classification and information on design of plastics piping systems used for renovation

11296 Plastics piping systems for renovation of underground non-pressure drainage and sewerage networks
11296-1 Part 1: General
11296-2 Part 2: Lining with continuous pipes

DRAFTING NOTE: ISO 11296-2 is currently under development. This document will be publicly available in the near future.

WSAA Water Services Association of Australia

WSA 02 Sewerage Code of Australia

*** END OF DRAFT ***

REFERENCE COPY ONLY

Draft for Public Comment
Australian/New Zealand Standard

This copy of Public Comment DR AS/NZS 3500.2:2017 is for reference only. This reference copy has been prepared using an automated tool to indicate key differences between the current edition of AS/NZS 3500.2:2015 (as amended) and Public Comment DR AS/NZS 3500.2:2017.

Standards Australia Limited accepts no responsibility arising out of or in connection with the reference copy. Standards Australia Limited does not warrant or represent that the differences indicated in the reference copy are accurate or complete or that the reference copy should be relied on for any particular purpose.

Readers should make their own assessment of the differences between the current edition of AS/NZS 3500.2:2015 (as amended) and Public Comment DR AS/NZS 3500.2:2017.

Public Comment DR AS/NZS 3500.2:2017 (in the first part of this PDF document without changes indicated) is the official version for comment.

PREFACE

This Standard was prepared by the Joint Standards Australia/Standards New Zealand Committee WS-014, Plumbing and Drainage, to supersede AS/NZS ~~3500.2:2003~~3500.2:2015.

~~*This Standard incorporates Amendment No. 1 (June 2017). The changes required by the Amendment are indicated in the text by a marginal bar and amendment number against the clause, note, table, figure or part thereof affected.*~~

The objective of this Standard is to provide installers with solutions to ~~comply~~ conform with—

(a) the National Construction Code (NCC), Volume Three: Plumbing Code of Australia (PCA); and

(b) the New Zealand Building Code (Clause G13 Foul water).

This Standard is part of a series for plumbing and drainage, as follows:

AS/NZS		
3500	Plumbing and drainage	
3500.0	Part 0:	Glossary of terms
3500.1	Part 1:	Water services
3500.2	Part 2:	Sanitary plumbing and drainage ~~systems~~ (this Standard)
3500.3	Part 3:	Stormwater drainage~~systems~~
3500.4	Part 4:	Heated water services
~~3500.5~~	~~Part 5:~~	~~Housing installations~~

This revision includes changes to align the Standard with the NCC~~-~~, Volume Three, Plumbing Code of Australia (PCA).

Some materials and products used in a sanitary plumbing and drainage system are provided with instructions for installation and use. ~~Whilst~~ While not a requirement of this Standard, or acceptable as an alternative to the requirements of this Standard, ~~compliance~~ conformance with these instructions generally ensures that—

(~~A~~i) the material or product is fit for the application;

(~~B~~ii) the performance of the system is not degraded;

(~~C~~iii) the durability of the material or product is not impaired; and

(~~D~~iv) the manufacturer's warranty remains valid.

PROVISION FOR REVISION

This Standard necessarily deals with existing conditions, but is not intended to discourage innovation or to exclude materials, equipment and methods, which may be developed in future. Revisions will be made from time to time in view of such developments and amendments to this edition will be made only when absolutely necessary.

The terms 'normative' and 'informative' have been used in this Standard to define the application of the appendix to which they apply. A 'normative' appendix is an integral part of a Standard, whereas an 'informative' appendix is only for information and guidance.

Statements expressed in mandatory terms in notes to figures and tables are deemed to be requirements of this Standard.

Notes used in this Standard are of an advisory nature only and are used to give explanation or guidance to the user on either recommended considerations or technical procedures, or to provide an informative cross-reference to other documents or publications. Notes to clauses in this Standard do not form a mandatory part for ~~compliance~~ conformance with this Standard.

This Standard includes a commentary on some of the clauses. The commentary directly follows the relevant clause, is designated by 'C' preceding the clause number and is printed in italics in a box. The commentary is for information and guidance and does not form part of the Standard.

CONTENTS

Page

Page

Page

STANDARDS AUSTRALIA/STANDARDS NEW ZEALAND

Australian/New Zealand Standard
Plumbing and drainage

Part 2: Sanitary plumbing and drainage

SECTION 1 SCOPE AND GENERAL

1.1 SCOPE

This Standard specifies requirements for the design and installation of sanitary plumbing and drainage from the fixtures to a sewer, common effluent system or an on-site wastewater management system, as appropriate. It applies to new installations as well as alterations, additions or repairs to existing installations.

Illustrations used in this Standard are diagrammatic only and have been chosen without prejudice.

This Standard also specifies requirements in accordance with the requirements of AS 2870, for flexible mechanical connections to be installed in all plastics pipe drainage systems and covers flexible connections, lagging and water ingress under the slab via trenches to accommodate a total range of differential soil movement for Classes M, M-D, H1, H1-D, H2, H2-D, E and E-D. Appendix E provides further information on classification of soils.

This Standard does not provide specific designs for Class P sites. A classification of P, by itself, will not usually provide sufficient information to enable an appropriate plumbing and drainage system design to be prepared. Additional information will usually be required, according to the nature of the factors leading to the P classification.

NOTES:

1 The pre-treatment of trade wastes is not specified in this Standard.

2 All sanitary plumbing and sanitary drainage installations for relocatable dwellings on long-term sites should ~~comply~~ conform with this Standard.

1.2 APPLICATION

1.2.1 Australia

This Standard shall be read in conjunction with the Plumbing Code of Australia (PCA) in Australia.

Where alternative Australian or New Zealand standards are referenced (e.g. AS 1345) the Australian Standard shall be used for Australia only.

For Australia, this Standard does not preclude the use of any design or method of installation, provided the completed system and installation meet the performance requirements of the PCA or BCA, as appropriate.

1.2.2 New Zealand

This Standard shall be read in conjunction with the New Zealand Building Code in New Zealand. This Standard may be used for ~~compliance~~ conformance with the New Zealand Building Code~~-~~, Paragraph G13, Foul water.

Where alternative New Zealand standards are referenced (e.g. NZS 5807), the New Zealand Standard shall be used for New Zealand only.

1.3 NORMATIVE REFERENCES

The following are the normative documents referenced in this Standard~~ are listed in Appendix A~~.

-AS

1074	Steel tubes and tubulars for ordinary service
1345	Identification of the contents of pipes, conduits and ducts
1379	Specification and supply of concrete
1432	Copper tubes for plumbing, gasfitting and drainage applications
1478	Chemical admixtures for concrete, mortar and grout
1478.1	Part 1: Admixtures for concrete
1566	Copper and copper alloys—Rolled flat products
1589	Copper and copper alloy waste fittings
1604	Specification for preservative treatment
1064.1	Part 1: Sawn and round timber
1631	Cast grey and ductile iron non-pressure pipes and fittings
1646	Elastomeric seals for waterworks purposes
1657	Fixed platforms, walkways, stairways and ladders—Design, construction and installation
1741	Vitrified clay pipes and fittings with flexible joints—Sewer quality
2129	Flanges for pipes, valves and fittings
3501	Parallel screw threads of Whitworth form (BSW and BSF) and associated gauges and gauging practice
3517	Capillary fittings of copper and copper alloy for non-pressure sanitary plumbing applications
3571	Plastics piping systems—Glass-reinforced thermoplastics (GRP) systems based on unsaturated polyester (UP) resin
3571.1	Part 1: Pressure and non-pressure drainage and sewerage (ISO 10467:2004, MOD)
3600	Concrete structures
3688	Water supply and gas systems—Metallic fittings and end connectors
3795	Copper alloy tubes for plumbing and drainage applications
4139	Fibre-reinforced concrete pipes and fittings
4809	Copper pipe and fittings—Installation and commissioning

AS/NZS

1167	Welding and brazing—Filler metals
1167.1	Part 1: Filler metal for brazing and braze welding
1167.2	Part 2: Filler metal for welding
1260	PVC-U pipes and fittings for drain, waste and vent applications
1546	On-site domestic wastewater treatment units
1546.1	Part 1: Septic tanks
1546.2	Part 2: Waterless composting toilets
1546.3	Part 3: Aerated wastewater treatment systems
2032	Installation of PVC pipe systems

AS/NZS	
2033	Installation of polyethylene pipe systems
2280	Ductile iron pipes and fittings
2544	Grey iron pressure fittings
2648	Underground marking tape
2648.1	Part 1: Non-detectable tape
2878	Timber—Classification into strength groups
3500	Plumbing and drainage
3500.0	Part 0: Glossary of terms
3500.1	Part 1: Water services
3879	Solvent cements and priming fluids for PVC (PVC-U and PVC-M) and ABS and ASA pipes and fittings
4087	Metallic flanges for waterworks purposes
4331	Metallic flanges (series)
4401	Plastics piping systems for soil and waste discharge (low and high temperature) inside buildings—Polyethylene (PE)
4671	Steel reinforcing materials
4680	Hot-dip galvanized (zinc) coatings on fabricated ferrous articles
4936	Air admittance valves (AAVs) for use in sanitary plumbing and drainage systems
4999	PVC-U maintenance shafts
5065	Polyethylene and polypropylene pipes and fittings for drainage and sewerage applications
7671	Plastics piping systems for soil and waste discharge (low and high temperature) inside buildings—Polypropylene (PP) (ISO 7671:2003, MOD)
NZS	
3109	Concrete construction
3113	Specification for chemical admixtures for concrete
3124	Specification for concrete construction for minor works
3640	Chemical preservation of round and sawn timber
5807	Code of practice for industrial identification by colour, wording or other coding
7643	Code of practice for the installation of unplasticized PVC pipe systems
ISO	
7685	Plastics piping systems — Glass-reinforced thermosetting plastics (GRP) pipes — Determination of initial specific ring stiffness
9969	Thermoplastics pipes — Determination of ring stiffness
BS EN	
295	Vitrified clay pipe systems for drains and sewers
295-1	Requirements for pipes, fittings and joints
EN	
10088	Stainless steels
10088-1	Part 1: List of stainless steels

NZS/BS	
1387	Specification for screwed and socketed steel tubes and tubulars and for plain end steel tubes suitable for welding or for screwing to BS 21 pipe threads
ASTM	
A240/A240M	Standard Specification for Chromium and Chromium-Nickel Stainless Steel Plate, Sheet, and Strip for Pressure Vessels and for General Applications
A270/A270M	Standard Specification for Seamless and Welded Austenitic and Ferritic/Austenitic Stainless Steel Sanitary Tubing
ABCB	
NCC	National Construction Code (series)
NZBC	Clause G13 Foul Water
WMTS	
WMTS-518	Rehabilitation of existing Non Pressure Pipelines by the use of Cured In Place Pipe (CIPP)
WSAA	
WSA 117	Industry Standard for Acrilonitrile Butadiene Styrene (ABS) Compounds, Pipes and Fittings for Drainage and Sewerage

NOTE: Documents referenced for informative purposes are listed in the Bibliography.

1.4 DEFINITIONS

For the purpose of this Standard, the definitions given in AS/NZS 3500.0 ~~and~~ , the one below and those specific to vacuum drainage in Section 16 apply:

1.4.1 Flexible mechanical joint

A joint (or joints) that permits movement, expansion and/or contraction and/or rotation (or swivel) including axial rotation of the jointed pipes or fittings with sufficient degrees of freedom to accommodate any anticipated ground movements (or movements of the supporting structure), which results in having the ability to telescope and/or articulate (or swivel) and/or axially rotate as a response to differential ground movements.

1.4.2~~1.4.1~~ Pressure attenuator

A device used as an alternative to relief venting to reduce positive air pressure pulses in discharge stacks.

1.4.3 Renovation

Work incorporating all or part of the original fabric of the pipeline, by means of which its current performance is improved.

1.4.4 Structural liner

A liner that has sufficient pipe ring stiffness as to be self-supporting and able to resist buckling due to ground water or soil loads in the absence of support from the host pipe.

1.4.5 Waffle raft

A stiffened raft with closely spaced ribs constructed on the ground and with slab panels suspended between ribs.

1.5 PLASTICS ABBREVIATIONS

The following plastics abbreviations are used in this Standard.

ABS	Acrylonitrile butadiene styrene
GRP	Glass-filament-reinforced thermosetting plastic

PP	Polypropylene
PP-R	Polypropylene random copolymer
PB	Polybutylene
PE-HD	High density polyethylene
PE-X	Cross-linked polyethylene
PVC-U	Unplasticized polyvinyl chloride
PVC-M	Modified polyvinyl chloride
PVC-O	Oriented polyvinyl chloride

1.6 MEASUREMENT OF PIPE LENGTH

For the purposes of this Standard, the length of a branch drain or discharge pipe shall be measured along the centre-line from the weir of the trap to the point of connection to a stack, graded discharge pipe, drain or other drainage trap as shown in Figure 1.6.

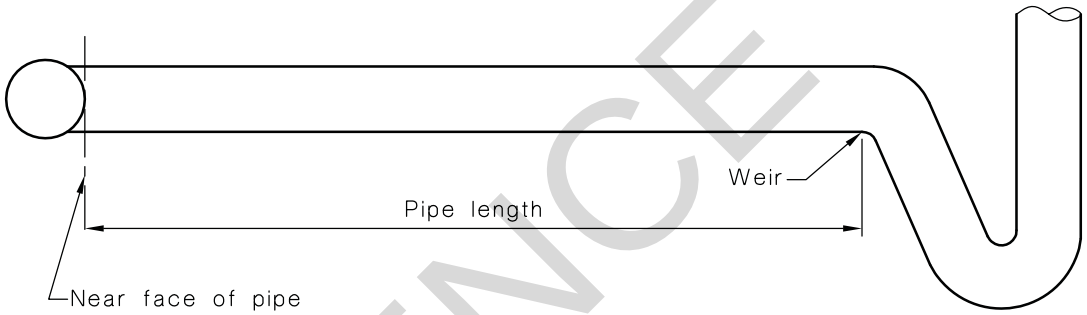

FIGURE 1.6 PIPE LENGTH—METHOD OF MEASUREMENT

1.7 PIPE GRADES

In this Standard, pipe grades are expressed as a percentage of vertical to horizontal distances.

1.8 EQUIVALENT PIPE SIZES

Nominal sizes of pipes and fittings quoted in this Standard are applicable to all materials listed in Appendix ~~B~~A, except for polyethylene (PE) and polypropylene (PP). Where the nominal size of a pipe or fitting is specified in this Standard, an equivalent pipe size, appropriate to polyethylene and polypropylene pipes and fittings, shall be selected from Table 1.8.

TABLE 1.8

EQUIVALENT SIZES FOR PE AND PP PIPES AND FITTINGS

Nominal size DN	Equivalent OD for PE and PP
32	32
40	40
50	50
65	63
80	90
100	110
125	125
150	160
225	250
300	315

(i) undiluted discharges from urinals, trade waste discharges that could have a deleterious effect on the copper (e.g. wastes from photographic equipment or cooling towers); or

(ii) the discharge from grease arrestors.

(c) Copper and copper alloy pipes shall not be bent on site beyond an offset angle of 10°, except that Type D copper shall not be bent.

(d) Copper alloy bends and junctions used at the base of stacks greater than 9 m in height shall be cast or hot-pressed.

(e) Austenitic stainless steel pipes and fittings shall be ~~Type~~ Types 304, 304L, 316 or 316L or EN 10088~~.~~-1, Grade EN 1.4301 or Grade EN 1.4404.

(f) Stainless steel drains located below ground shall be Type 316 or EN 10088-1, Grade EN 1.4404.

2.4.3 Fabricated metallic pipes and fittings

Fabricated metallic pipes and fittings shall ~~comply~~ conform with the following:

(a) Copper alloy fittings other than junctions shall not be fabricated on site.

(b) All fabricated copper bends and junctions at the base of stacks up to 9 m in height shall be formed of Type B or heavier gauge copper.

(c) Stainless steel fittings and assemblies, including bending, shall not be fabricated on site.

2.4.4 Plastics pipes and fittings

Plastics pipes and fittings shall ~~comply~~ conform with the following:

(a) ~~They shall be resistant to ultraviolet light when installed in~~ Plastics pipes and fittings of materials other than PVC shall be protected from direct sunlight.

NOTE: Examples of protection include sleeving with metal or plastics pipe or conduit, lagging or painting with UV resistant paint.

(b) Glass-filament-reinforced thermosetting plastic (GRP) pipes shall have a minimum pipe stiffness of 5000 N/m deflection per metre length when installed below ground.

2.4.5 Other materials—Pipes and fittings

Pipes and fittings other than metallic or plastics shall ~~comply~~ conform with the following:

(a) Fibre-reinforced concrete (FRC) pipes shall not be used in waste lines receiving trade waste discharges that could have a deleterious effect on the FRC (e.g. wastes from photographic equipment or cooling towers).

(b) Vitrified clay pipes and fittings shall ~~comply~~ conform with AS 1741 or BS EN 295-1.

Vitrified clay pipes and fittings shall not be used above ground except where installed as a riser connected to a fixture in accordance with Clause 3.8.3, or as a drain under buildings in accordance with Clause 4.3.2(b).

2.4.6 Pipes and fittings for pressure applications

Pipes and fittings for pressure applications shall ~~comply~~ conform with the pressure requirements of Section 2 of AS/NZS 3500.1.

2.4.7 Pipes and fittings for vacuum drainage systems

Materials and products used in vacuum drainage systems shall be in accordance with this Section and Section 16.

2.5 SHEET MATERIALS

2.5.1 Copper

Copper sheet shall be not inferior to alloy C12200 ~~complying~~ conforming with AS 1566.

2.5.2 Stainless steel

Stainless steel sheet shall not be inferior to Type 304 ~~complying~~ conforming with ASTM A240/A240M, and shall be not less than 1.2 mm thick.

2.6 JOINTS

2.6.1 Flanged joints

Flanged joints shall ~~comply~~ conform with—

(a) AS/NZS 2280 and AS/NZS 2544 for ductile iron and grey cast iron; or

(b) AS 2129, AS/NZS 4331 (series) or AS/NZS 4087 and be appropriate for the test pressure requirements of Section 15.

2.6.2 Elastomeric seals

Elastomeric seal materials shall ~~comply~~ conform with AS 1646.

Where an elastomeric seal gasket is provided in the line or in a fitting, it shall not be replaced with mastic or sealant compounds.

2.6.3 Silver brazing alloy

2.6.3.1 *Copper and copper alloys*

Silver brazing alloys for capillary jointing of copper and copper alloy pipes and fittings shall ~~comply~~ conform with the requirements for silver brazing alloys or copper phosphorus alloys of AS/NZS 1167.1 and contain a minimum of 1.8% silver and a maximum of 0.05% cadmium.

2.6.3.2 *Stainless steels*

Silver brazing alloys for capillary jointing of stainless steel pipes and fittings shall ~~comply~~ conform with AS/NZS 1167.1 and contain a minimum of 38% silver and a maximum of 0.05% cadmium.

2.6.4 Filler rods for stainless steel joints

Joints in stainless steel pipework larger than DN 25 shall be made using filler rods of low carbon stainless steel not greater than 2 mm in diameter, ~~complying~~ conforming with AS/NZS 1167.2.

2.6.5 Plastics

2.6.5.1 *Solvent cement and priming fluid*

Solvent cement and priming fluid used for jointing plastics pipes and fittings shall ~~comply~~ conform with AS/NZS 3879.

Solvent cement shall not be used without priming fluid.

NOTE: The colour of the priming fluid should be different from the colour of the solvent cement and the pipe to which it is applied. Generally, the priming fluid is pink, and the solvent cement is generally—

(a) for Type P PVC, green (Australia) or blue or gold (New Zealand);

(b) for Type N PVC, blue (Australia) or clear (New Zealand);

(c) for Type P ABS, grey; and

(d) for Type G, clear.

2.6.5.2 *High density polyethylene (PE-HD)*

Jointing of pipes and fittings shall be in accordance with AS/NZS 2033.

2.7 CONCRETE AND MORTAR

2.7.1 Concrete mix

Pre-mixed concrete shall ~~comply~~ conform with AS 1379 and shall have a minimum characteristic compressive strength of 20 MPa, as specified in AS 3600 or NZS 3109, NZS 3124.

Site-mixed concrete shall consist of cement, fine aggregate and coarse aggregate, all measured by volume, and shall have sufficient water added to make the mix workable. It shall have a minimum characteristic compressive strength of 20 MPa.

2.7.2 Cement mortar

Cement mortar shall consist of one part cement and two parts of fine aggregate measured by volume, properly mixed with the minimum amount of water necessary to render the mix workable.

Cement mortar that has been mixed and left standing for more than 1 h shall not be used.

2.7.3 Chemical admixtures

Chemical admixtures used in concrete shall ~~comply~~ conform with AS 1478.1 or NZS 3113.

2.7.4 Water for concrete and mortar

Water used for mixing concrete and cement mortar shall be free from amounts of matter that are harmful to the mixture, the reinforcement or any other items embedded within the concrete or mortar.

2.7.5 Steel reinforcement

Steel reinforcing materials used in concrete structures shall ~~comply~~ conform with AS/NZS 4671.

2.8 MISCELLANEOUS

2.8.1 Timber

Timber exposed to the weather shall be of durability Class 2 ~~complying~~ conforming with AS/NZS 2878 or shall be treated in accordance with AS 1604.1. In New Zealand, exposed timber shall be treated to H3 (CCA) in accordance with NZS 3640.

Timber in contact with the ground shall be durability Class 1 for Australia and H4 (CCA) for New Zealand.

2.8.2 Epoxy resins

Epoxy resins shall be compatible with the materials being joined.

2.8.3 Pipe bedding

Pipe bedding materials shall ~~comply~~ conform with Clause 5.4.

2.8.4 Backfill

Backfill material shall ~~comply~~ conform with Clause 5.5.

2.8.5 External protective coatings

External coatings used for the protection of drains installed in corrosive areas shall—

(a) be impervious to the passage of moisture;

(b) be resistant to the external corrosive environment;

(c) be resistant to abrasion by the surrounding fill; and

(d) not contain any material that could cause corrosion to the underlying pipes or fittings.

NOTE: Polyethylene sleeving used to protect underground drains may require additional protection if installed in rock or in stony ground.

2.8.6 Fibreglass reinforced plastics tanks

Fibreglass-reinforced plastics tanks shall be manufactured in accordance with AS/NZS 1546.1.

SECTION 3 DRAINAGE DESIGN

3.1 SCOPE OF SECTION

This Section specifies requirements for the design of sanitary drainage systems.

NOTE: Vacuum drainage is covered in Section 16.

3.2 LOCATION OF DRAINS

3.2.1 General

Any drain located under or inside a building shall only serve fixtures within that building.

The plumbing and drainage system shall accommodate the range of differential soil movement in accordance with the soil movement classified on each individual site. Prior to the commencement of work, the site classification in accordance with AS 2870 shall be obtained.

These provisions are required for all Class M, M-D, H1, H1-D, H2, H2-D, E and E-D sites with nominal pipe sizes, up to 315 mm diameter in accordance with this Standard.

NOTES:

1 ~~NOTE:~~Drains should be located external to the building wherever practicable.

2 Pipes may be encased in concrete or in recesses in the slab when provided with flexible joints at the exterior of the edge beam/slab.

3.2.2 Site classification based on soil reactivity

Classification of sites where ground movement is predominantly due to soil reactivity under normal moisture conditions shall be classified based on the expected level of ground movement as nominated in AS 2870.

For classed M, H1, H2 and E further classification may be required, based on the depth of the expected moisture change. For sites with deep-seated moisture changes characteristics of dry climates and corresponding to a design depth of suction equal to or greater than 3 m, the classification shall be M-D, H1-D, H2-D or E-D as appropriate.

NOTES:

1 For example, M represents a moderately reactive site with shallow moisture changes and M-D represents a moderately reactive site with deep moisture changes.

2 Clauses which relate to a site classification apply to both shallow and deep moisture changes.

3.2.3 Plumbing and drainage requirements for buildings on sites with predicted differential ground

Plumbing and drainage for buildings on sites classified M, H1, H2, and E (for sites with predicted differential ground movements in the range of 21 mm to 200 mm) shall be in accordance with Table 3.2.2.

TABLE 3.2.2

TYPICAL SOIL CLASSIFICATION BY CHARACTERISTIC SURFACE MOVEMENT

Soil classification	Soil foundation	Characteristic surface movement (*ys*) mm
A	Most sand and rock sites with little or no ground movement from moisture changes	0
S	Slightly reactive clay sites, which may experience only slight ground movement from moisture changes	0–20
M	Moderately reactive clay sites, which may experience moderate ground movement from moisture changes	21–40
H1	Highly reactive clay sites, which may experience high ground movement from moisture changes	41–60
H2	Highly reactive clay sites, which may experience very high ground movement from moisture changes	61–75
E	Extremely reactive sites, which may experience extreme ground movement from moisture changes	76+
P	Applies to 'problem' sites (e.g. filled soil or potential to collapse). Special provisions apply.	As specified

Buildings on sites classified M, H1, H2, and E shall be provided with plumbing and drainage systems designed in accordance with the following:

(a) The base of trenches shall be sloped away from the building. Trenches shall be backfilled with clay in the top 300 mm within 1.5 m of the building. The clay used for backfilling shall be compacted.

NOTE: See Figure 3.2.2(A).

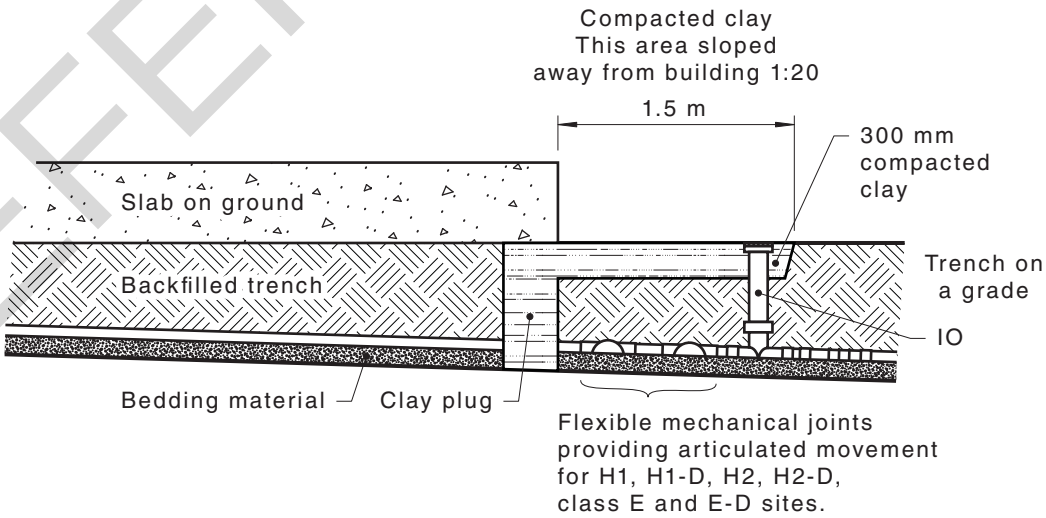

FIGURE 3.2.2(A) TYPICAL INSTALLATION OF CLAY PLUG

(b) Where plumbing and drainage pass under footing systems, there shall be a barrier to prevent the ingress of water. This shall be achieved by—

(i) backfilling the width of the trench to full depth with clay of thickness not less than 300 mm; or

(ii) installing a damp-proofing membrane conforming with AS 2870 across the cross-section of the trench, taped to the pipe with an inert waterproof tape and keyed into the sides and base of the trench.

NOTE: See Figure 3.2.2.(B).

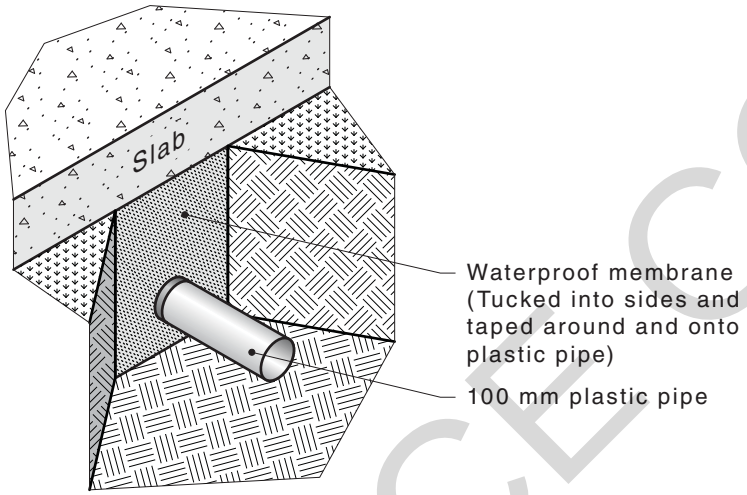

FIGURE 3.2.2.(B) TYPICAL INSTALLATION OF DAMP-PROOFING MEMBRANE

(c) Penetrations for plumbing and drainage pipework through beams of a raft and perimeter strip footings shall be avoided where practicable, but where necessary, shall be detailed to allow for movement as follows:

(i) Closed-cell polyethylene lagging shall be wrapped around all sanitary plumbing and drainage pipework at penetrations (excluding vertical).

(ii) Sanitary plumbing and drainage pipework shall be a minimum of 20 mm thick on Class M , Class H1 sites and 40 mm thick on Class H2 and Class E sites.

(d) Except for Class M sites, sanitary plumbing and drainage pipework attached to or emerging from underneath the building shall incorporate two flexible joints with a spacing between the joints not exceeding 2.5 times the pipe diameter, installed externally and commencing 1 m outside the footing. Such joints shall accommodate a total range of differential movement in any direction not less than the estimated characteristic surface movement of the site (*ys*).

The fittings or other devices that are provided to allow for the movement shall be set at the mid-position of their range of possible movement at the time of installation, to allow for movement equal to 0.5 of the maximum *ys* value specified as applicable to the site classification.

3.3 SIZE AND LENGTH OF DRAINS

3.3.1 Fixture unit loading

The size of a drain shall be determined by the number of fixture units and type of fixtures discharging into it. The fixture unit loading for each pipe size and grade shall not exceed the maximum specified in Table 3.3.1.

NOTE: Fixture unit ratings are given in Tables 6.2(A) and 6.2(B).

TABLE 3.3.1

MAXIMUM FIXTURE UNIT LOADING FOR VENTED DRAINS

Grade ~~,~~%	Nominal size of drain~~,~~ DN						
	65 (see Note 1)	80	100	125	150	225	300
5.00	60	215	515	1450	2920	11 900	26 900
3.35	36	140	345	1040	2200	9490	21 800
2.50	25	100	255	815	1790	8060	18 700
2.00	×	76	205	665	1510	7090	16 600
1.65	×	61	165	560	1310	6370	15 000
1.45	×	(50)	(140)	485	1160	5810	13 900
1.25	×	(42)	(120)	425	1040	5360	12 900
1.10	×	×	×	(380)	935	4970	12 100
1.00	×	×	×	(340)	855	4500	11 400
0.85	×	×	×	×	(725)	3850	10 300
0.65	×	×	×	×	(595)	3250	9090
0.50	×	×	×	×	×	×	7720
0.40	×	×	×	×	×	×	6780

NOTES:

1 DN 65 drains may be used as branch drains only, provided no soil fixtures (except urinals) are connected thereto.

2 '×' indicates that the combination of nominal size and grade is not acceptable.

3 Figures in brackets are the maximum fixture unit loadings for drains laid at reduced grades in accordance with Clause 3.4.2.

4 The regulatory authority may prescribe or approve the sizing and grading of any drain on the basis of observed peak flows for buildings of similar occupancy in lieu of the size determined as prescribed in this Standard.

3.3.2 Main drain

The minimum size of a main drain shall be DN 100.

3.3.3 Branch drains

The minimum size of a branch drain shall be DN 65.

3.3.4 Limitations on vented DN 80 branch drains

Not more than two water closet pans shall be connected to a vented DN 80 branch drain. Any discharge pipe from a bath or laundry trough connected to a DN 80 vented branch drain shall be DN 40.

3.3.5 Use of eccentric taper fitting

Where any fixture with a P-trap of DN 40 or DN 50 is connected to a DN 65 branch drain, the eccentric taper fitting used to make the connection shall be fitted immediately downstream of the fixture trap, as shown in Figure 3.3.5. The soffit of the fitting shall be in common alignment with the soffit of the pipe to which it is connected.

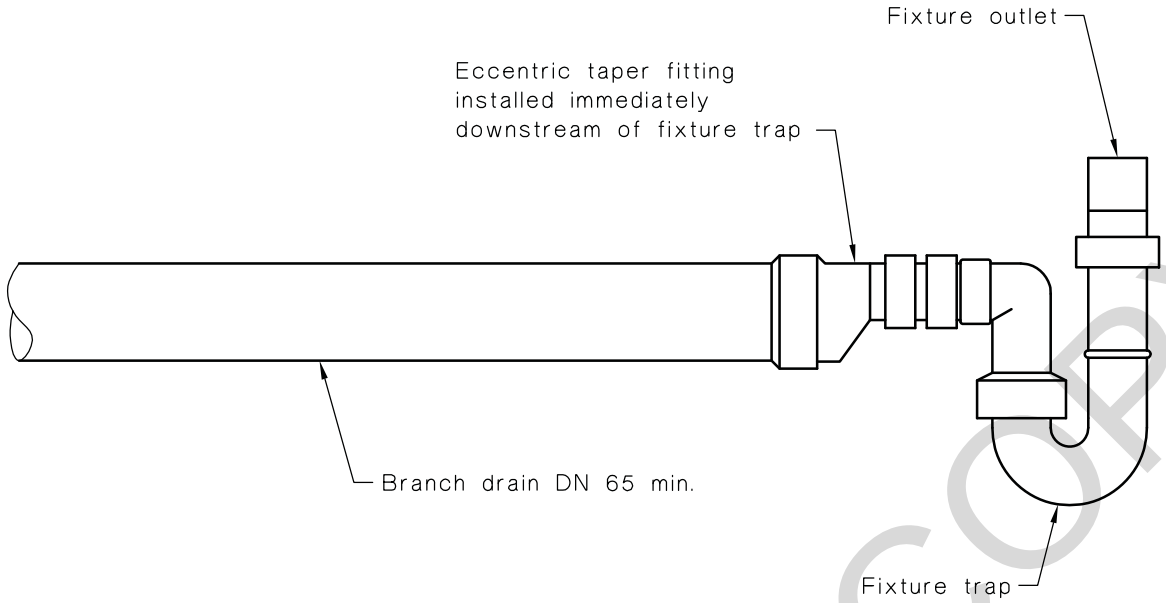

FIGURE 3.3.5 CONNECTION OF FIXTURE TRAPS (DN 40 OR DN 50) ON GRADE TO BRANCH DRAINS

3.3.6 Size change

A drain shall not diminish in size in the direction of flow.

3.3.7 Downstream of boundary trap

Drains downstream of a boundary trap shall be not smaller than DN 100.

3.3.8 Oversizing of drains

A drain shall not be increased in size unless the fixture unit loading is in excess of the maximum allowable for that size drain at a particular grade, as specified in Table 3.3.1.

3.3.9 Maximum length of fixture discharge pipes

The maximum length of fixture discharge pipe without venting shall be in accordance with Appendix C.

3.4 GRADES OF DRAINS

3.4.1 Minimum grade

The nominal minimum grade of vented and unvented drains shall be as given in Table 3.4.1.

TABLE 3.4.1

MINIMUM GRADE OF DRAINS

Nominal size DN	Minimum grade %
65	2.50
80	1.65
100	1.65*
125	1.25
150	1.00
225	0.65
300	0.40

* Except for drains from septic tanks, sewage treatment plants and unvented discharge pipes from tundishes, which may have a minimum grade of 1.00%.

NOTE: Appendix C provides a table for conversion of grades as a percentage to grades as a ratio.

3.4.2 Reduced grades

Where the minimum gradient, as specified in Table 3.4.1, cannot be obtained, drains may be laid at the reduced grades given in Table 3.4.2.

Where soil fixtures are connected, the fixture unit loading on the drain shall be not less than the appropriate value given in Table 3.4.2. If this loading cannot be achieved, provision shall be made for flushing the drain.

~~**TABLE 3.4.1**~~

~~**MINIMUM GRADE OF DRAINS**~~

~~Nominal sizeDN~~	~~Minimum grade%~~
~~6580100~~	~~2.501.651.65*~~
~~125150225~~	~~1.251.000.65~~
~~300~~	~~0.40~~

~~* Except for drains from septic tanks, sewage treatment plants and unvented discharge pipes from tundishes, which may have a minimum grade of 1.00%.~~

~~NOTE: Appendix D provides a table for conversion of grades as a percentage to grades as a ratio.~~

TABLE 3.4.2

MINIMUM FIXTURE UNIT LOADINGS FOR REDUCED GRADE DRAINS

Reduced grade %	Nominal size of drain, DN			
	80	100	125	150
1.45	9	10	—	—
1.25	10	18	—	—
1.10	×	×	27	—
1.00	×	×	38	—
0.85	×	×	×	75
0.65	×	×	×	160

NOTES:

1 '×' indicates that the combination of nominal size and grade is not acceptable.

2 '—' indicates that the grade is acceptable by Table 3.4.1 for this size (i.e. not reduced grade).

3 Appendix ~~D~~ C provides a table for conversion of grades as a percentage to grades as a ratio.

3.4.3 Steep grades

Where it is necessary to install a drain on a grade between 20% and vertical, anchor blocks shall be installed—

(a) at the bend or junction at the top and bottom of the inclined drain; and

(b) at intervals not exceeding 3 m.

3.4.4 Anchor blocks

Anchor blocks for drains up to DN 150 shall be of reinforced concrete having two reinforcing rods of not less than 9 mm diameter. The reinforcing rods shall be bent to a radius that is 100 mm greater than the outside diameter of the pipe, as shown in Figure 3.4.4. Anchor blocks shall—

(a) be not less than 150 mm in thickness;

(b) extend across the full width and be firmly keyed into the sides of the trench;

(c) extend above the top of the pipe to a minimum height of 150 mm;

(d) extend below the base of the trench for a minimum depth of 150 mm; and

(e) not cover any flexible joint.

SECTION 2 MATERIALS AND PRODUCTS

2.1 SCOPE OF SECTION

This Section specifies requirements for materials and products to be used in sanitary plumbing~~-~~, vacuum drainage and drainage systems.

2.2 AUTHORIZATION

In Australia, certain materials and products require authorization for use in plumbing and drainage installations in accordance with the Plumbing Code of Australia (PCA). In New Zealand product authorization is not required.

NOTE: A database of authorized products is available from www.abcb.gov.au.

2.3 SELECTION AND USE OF MATERIALS AND PRODUCTS

Materials and products used in sanitary plumbing and drainage systems, and vacuum drainage, shall be selected to ensure they are fit for their intended purpose.

Pipes and fittings shall be selected from those listed in Appendix ~~B~~A.

Factors to be taken into account in the selection shall include, but are not to be limited to, the following:

(a) The type of usage likely to occur.

(b) The nature and temperature of the water to be conveyed and the risk of corrosion, degradation and leaching.

(c) The nature of the environment and the ground, and the possibility of chemical attack and permeation therefrom.

(d) The physical and chemical characteristics of the materials and products.

(e) Compatibility of materials and products.

(f) Frost protection in accordance with AS/NZS 3500.1.

(g) Accessibility, for inspection, service, repair and replacement.

NOTE: Information on some of the above items may be obtainable from the supplier or manufacturer of the material or product.

2.4 LIMITATIONS ON THE USE OF PIPES AND FITTINGS

2.4.1 General limitations

The following limitations shall apply to the use of pipes and fittings for plumbing and sanitary drainage installations:

(a) Bends in pipes shall be free from wrinkling and flattening.

(b) Pipes and fittings shall be protected from excessive ambient heat.

2.4.2 Metallic pipes and fittings

Metallic pipes and fittings shall ~~comply~~ conform with the following:

(a) Galvanized steel pipes and fittings shall not be—

(i) used for the conveyance of discharge from soil fixtures;

(ii) cement-lined;

(iii) bent; or

(iv) installed in inaccessible locations.

(b) Copper pipes and fittings shall not be used to convey—

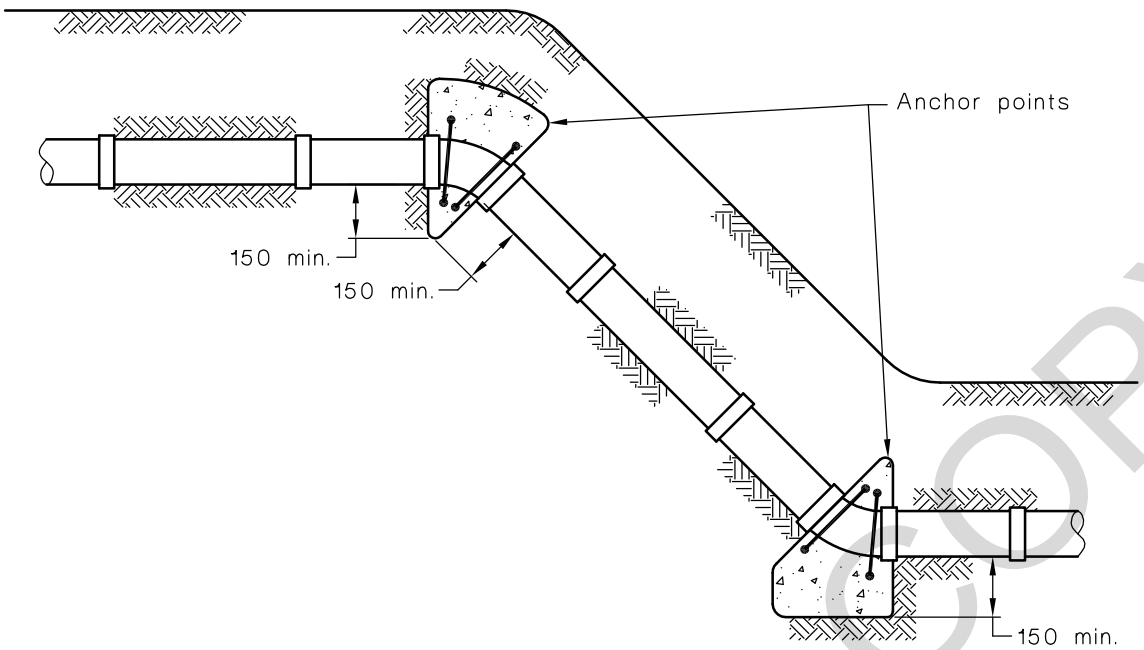

DIMENSIONS IN MILLIMETRES

FIGURE 3.4.4 ANCHORING OF DRAINS

3.5 LAYING OF DRAINS

3.5.1 General

Where a drain is to be located in an open cut trench that is in a road, easement, public place or the like, it shall be installed in accordance with the following:

(a) Where the full depth at the point of connection is not required to drain the property, a jump-up shall be installed either at the point of connection or within the property boundary.

(b) Where the presence of any obstacle prevents the drain from being laid at an even grade and with the required cover, the drain shall pass beneath the obstacle at an even grade with a jump-up only at the point of connection. Alternatively, a minimum clearance of 25 mm shall be provided between the obstacle and the drain, or an inclined section may be installed adjacent to the obstacle in the form of a graded jump-up with changes of direction not greater than 60°.

(c) The minimum cover of the drain shall be as specified in Table 3.7.2.

3.5.2 Easements and watercourses

Drains crossing an easement or a watercourse shall be installed in accordance with the following:

(a) The drain shall pass under or over any pipeline or closed conduit in the easement or under any open channel or watercourse.

(b) In an easement, a minimum clearance of 100 mm shall be maintained between an open channel, pipeline or conduit and the drain.

(c) No drain shall be laid through any such obstacle as outlined in Item (a).

(d) Where the drain is to pass over any obstacle as set out in Item (a), the drain shall have the minimum depth of cover specified in Clause 3.7.2.

3.6 PROXIMITY TO OTHER SERVICES

3.6.1 General

Where electrical conduit, wire, cable or consumer gas pipes, drains and other services are in existence, pipes shall be installed in accordance with the requirements of Clauses 3.6.2 to 3.6.8.

3.6.2 Separation from above-ground electrical conduit, wire, cable, consumer gas or water pipes

The separation shall be at least 100 mm between any discharge pipes and any above-ground—

(a) electrical conduit;

(b) electrical wire or cable;

(c) consumer gas pipes; or

(d) water services.

3.6.3 Separation from underground electrical supply cables or consumer gas pipes

The separation between any underground drain and an electrical supply cable shall be at least—

(a) 100 mm, provided the electrical supply cable is indicated along its length with orange marker tape ~~complying~~ conforming with AS/NZS 2648.1 and is mechanically protected; or

(b) 600 mm, where the electrical supply cable is neither indicated nor protected.

The separation between any underground drain and consumer gas pipes shall be at least—

(i) 100 mm provided the consumer gas pipe is indicated along its length with marker tape ~~complying~~ conforming with the requirements of AS/NZS 2648.1, laid 150 mm above the installed pipe and is mechanically protected; or

(ii) 600 mm, where the consumer gas pipe is neither indicated nor mechanically protected.

NOTES:

1 Mechanical protection is provided by any of the following:

(a) Concrete slabs.

(b) Continuous concrete pour.

(c) Bricks designed for protecting electrical supply cables.

2 For separation from a communication cable, see Clause 3.6.5.

3.6.4 Separation from underground electrical earthing electrode

For an electrical supply not exceeding 1000 V, the separation between any underground drain pipe and an electrical earthing electrode shall be at least 500 mm.

NOTE: For an electrical supply exceeding 1000 V, the relevant regulatory authorities should be contacted for a ruling.

3.6.5 Separation from underground communication cable

The separation between any underground drain and a communication cable shall be at least 100 mm.

3.6.6 Separation from other underground services

The separation between any underground drain and any other service other than electrical supply cables, consumer gas piping, communication service or water service shall be at least 100 mm or 300 mm from a stormwater drain exceeding DN 100.

NOTE: A typical shared trench is depicted in Figure 3.6.6.

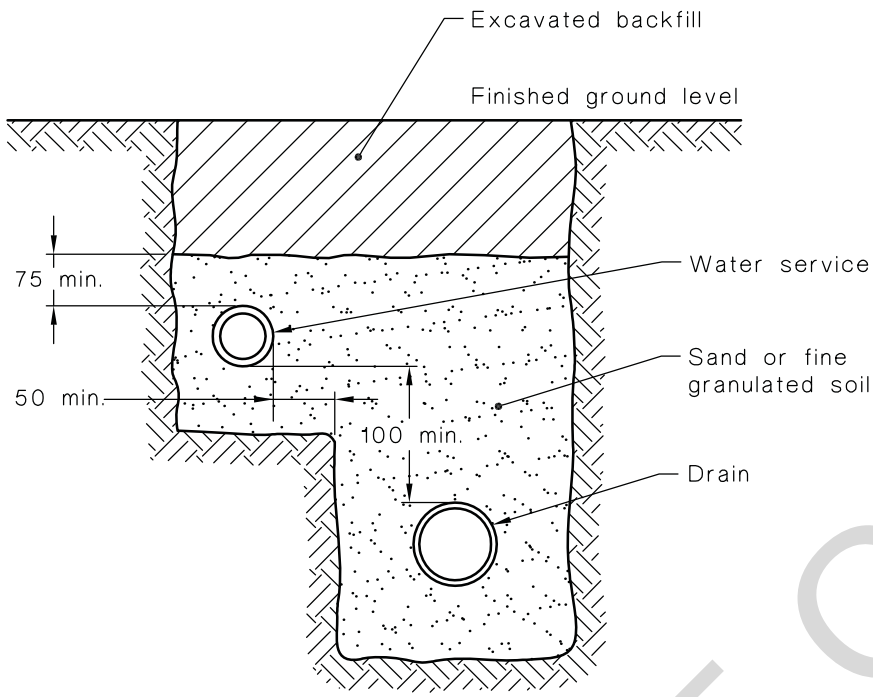

DIMENSIONS IN MILLIMETRES

FIGURE 3.6.6 TYPICAL SHARED TRENCH

3.6.7 Crossover of underground services

Any underground drain crossing a service or any underground service crossing a drain shall—

(a) cross at an angle of not less than 45°;

(b) have a vertical separation of not less than 100 mm; and

(c) be marked along its length for 1 m either side of the centre-line of the service with marker tape ~~complying~~ conforming with AS/NZS 2648.1, laid 150 mm above the installed service.

3.6.8 Clearance from underground obstructions

Drains shall be installed with sufficient clearance to any underground obstruction to protect the drain from physical damage and to permit repairs. The clearance shall be at least 100 mm.

NOTE: For drains in proximity to footings and foundations, see Clause 3.8.

3.7 DEPTH OF COVER FOR BURIED PIPES

3.7.1 General

Drains shall be laid in a manner that provides protection against mechanical damage and deformation due to vehicular loadings.

3.7.2 Depth of cover

Drains shall be installed with a minimum depth of cover, measured from the top of the pipe socket or inspection opening to the finished surface level, as specified in Table 3.7.2.

TABLE 3.7.2

MINIMUM COVER FOR BURIED PIPES

Location	Minimum depth of cover~~,~~ mm	
	Cast iron and ductile iron	Other materials
Subject to vehicular traffic	300	500
All other locations	Nil	300*

* Except as provided in Clauses 3.7.3 and 3.7.4.

3.7.3 Drains installed with less than minimum cover

Drains constructed of materials having less than the minimum cover specified in Table 3.7.2 shall be covered by at least 50 mm of overlay and then shall be paved with—

(a) 100 mm minimum thickness of reinforced concrete, where subject to heavy vehicular loading;

(b) 75 mm minimum thickness of brick or concrete paving, where subject to light vehicular traffic; or

(c) 50 mm minimum thickness of brick or concrete paving, where not subject to vehicular traffic.

The paving shall extend the full width of the trench, or the drain shall be protected from mechanical damage.

3.7.4 Drains under buildings

Drains below ground and under buildings may be laid with less than the minimum cover specified in Table 3.7.2, provided—

(a) 25 mm of overlay separates the drain from a reinforced concrete slab; or

(b) the drain is adequately protected from mechanical damage and superimposed loads.

3.8 BUILDING OVER DRAINS

3.8.1 Alterations and additions to buildings

The footings for alterations or additions to buildings shall not be placed over or adjacent to existing drains until the clearances specified in Clause 3.8.2 have been provided. Alternatively, such drains shall be relocated.

Any existing gully, inspection shaft, or boundary trap riser shall not remain under any such alterations or additions other than where specified in accordance with ~~Clause~~ Clauses 4.4.2.3, ~~Clause~~ 4.6.5 or Clause 4.6.6.5.

3.8.2 Installation near and under buildings

The following applies to drains in close proximity to footings or foundations:

(a) Where a drain passes under a strip footing, its angle of intersection with the footing in the horizontal plane shall be not less than 45°, and the minimum clearance between the top of the drain to the underside of the footing shall be 25 mm.

(b) Drains laid through footings or walls, other than below-ground external walls, shall be installed with an annular space of not less than 25 mm filled with a liner of flexible material.

(c) Pipes may be laid through below-ground external walls, provided—

(i) two flexible joints are provided externally within 800 mm of the external face of the wall, and such joints are not less than 600 mm apart; and

(ii) the penetration of the wall is made watertight.

(d) Where a drain is installed parallel to a footing, the trench shall be located as follows:

(i) In ~~Australia – for~~ Australia (for single dwellings), as shown in Figure ~~3.8.2~~3.8.3.

(ii) In New Zealand, as specified in NZBC Clause G13/AS2.

NOTE: For all other buildings or where the requirements of Item (d)(i) cannot be achieved, an engineered design should be used.

3.8.3 Fixture connections to vitrified clay drains under buildings

Where a riser of vitrified clay material is installed for the purpose of connecting a fixture, it may be extended up to 1 m above ground surface, provided—

(a) the spigot end of the riser is below ground;

(b) only the socket of the exposed pipe extends above floor level; and the exposed pipe is protected from damage.

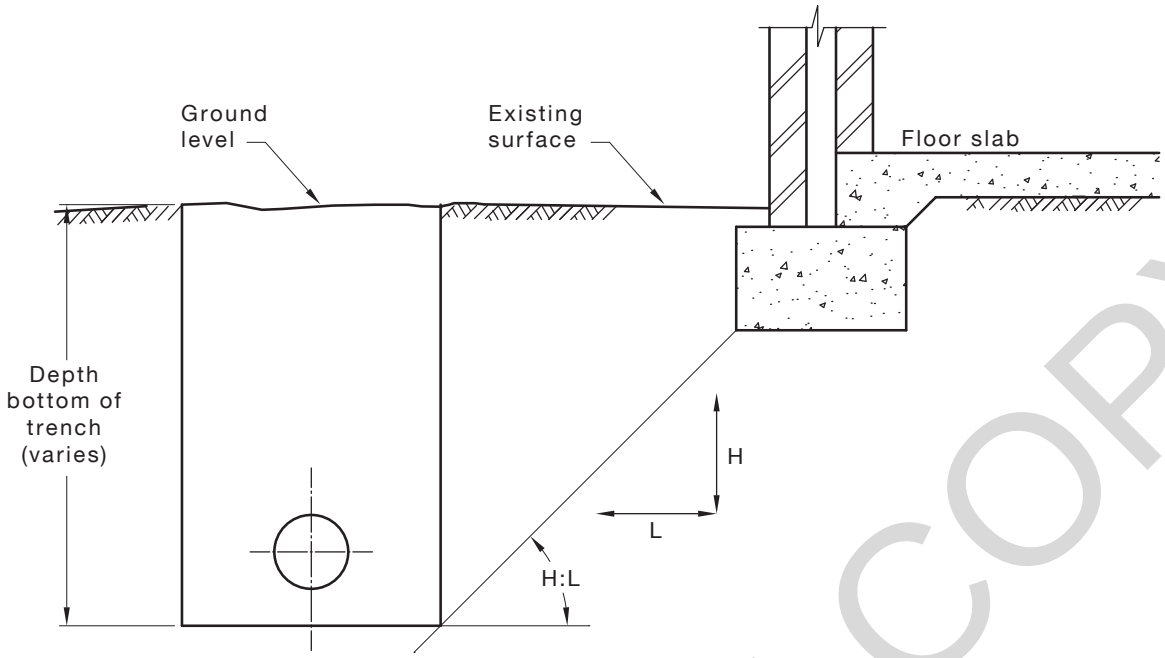

Soil type	Slope H:L	
	Compacted fill	Undisturbed ground
Stable rock (*)	2:3	8:1
Sand (*)	1:2	1:2
Silt (†)	1:4	1:4
Firm clay	1:2	1:1
Soft clay	Not suitable	2:3
Soft soils(†)	Not suitable	Not suitable

* Most sand and rock sites with little or no ground movement from moisture changes.

† Sites include soft soils, such as soft clay or silt or loose sands, landslip, mine subsidence, collapsing soils, soils subject to erosion, reactive sites subject to abnormal moisture conditions or sites that cannot be classified otherwise.

FIGURE ~~3.8.2~~ 3.8.3 EXCAVATION NEAR FOOTINGS

3.9 VENTING OF DRAINS

3.9.1 General

Vents in drains shall be provided—

(a) at both ends of any drain that incorporates a boundary trap;

(b) at the upstream end on any drain not incorporating a boundary trap;

(c) at the upstream end of any branch drain to which a fixture trap or floor waste gully is connected, if the distance from the weir of the trap to the vented drain exceeds 10 m;

(d) at the upstream end of a branch drain to which a gully is connected, or a sullage dump point located in a caravan park is connected, if the distance from the weir of the trap to the vented drain exceeds 10 m;

(e) at the upstream end of any DN 100 branch drain to which three or more water closet pans are connected;

(f) along the line of a DN 100 vented drain where 10 or more water closet pans are installed in a toilet block and are each individually connected in accordance with Clause 3.9.3.4; and

(g) in accordance with Clause 3.9.3.1 for drains connected to vacuum sewerage systems.

NOTE: Where air admittance valves are used, see Clause 6.9.

3.9.2 Location

3.9.2.1 *Upstream vent*

The upstream vent on any drain shall be connected—

(a) to the drain downstream of any fixture or drainage trap connection, provided any unvented section of drain upstream of the vent branch connection ~~complies~~ conforms with Clause 3.10.3; or

(b) at the vent extension of a stack located at or near the upstream end of the drain, provided any unvented section of drain upstream of the stack branch connection ~~complies~~ conforms with Clause 3.10.

3.9.2.2 *Downstream vent*

Where required by Clause 3.9.1(a), the downstream vent on any drain shall be connected within 10 m of the boundary trap riser, provided no other fixture is connected between the boundary trap riser and the vent connection.

3.9.2.3 *Low level vent (ground vent)*

Where a low level vent is provided in accordance with Clause 3.9.2.2, it shall be located so that—

(a) the inlet of the vent is not less than 150 mm above ground level;

(b) it terminates not less than 3 m from any opening into a building or 5 m from any air duct intake; and

(c) it is not liable to be damaged or cause injury or obstruction.

3.9.3 Size of drainage vents

3.9.3.1 *Minimum size*

Drainage vents shall be sized in accordance with Table 3.9.3.1 and—

(a) the upstream vent on any main drain shall be not less than DN 50;

(b) the upstream vent on any branch drain shall be not less than DN 40;

(c) the section of drain acting as a vent shall be not less than DN 65, as shown in Figure 3.9.3.1;

(d) notwithstanding the number of fixture units discharging to the drain, the minimum size of any ground vent pipe shall be DN 50; and

(e) if an air admittance valve is used to terminate an upstream vent, Table 6.9.2(A) shall apply.

NOTE: Branches connected into a positive pressure area, such as near boundary traps in multistorey buildings, may need additional venting.

TABLE 3.9.3.1

SIZE AND RATING OF VENTS

Size of vent pipe DN	Fixture units discharging to drain	Vent rating
40	>1 ≤10	0.5
50	>10 ≤30	1
65	>30 ≤175	2
80	>175 ≤400	3
100	>400 ≤600	6

NOTE: See Clause 6.9 for the use of air admittance valves (AAV).

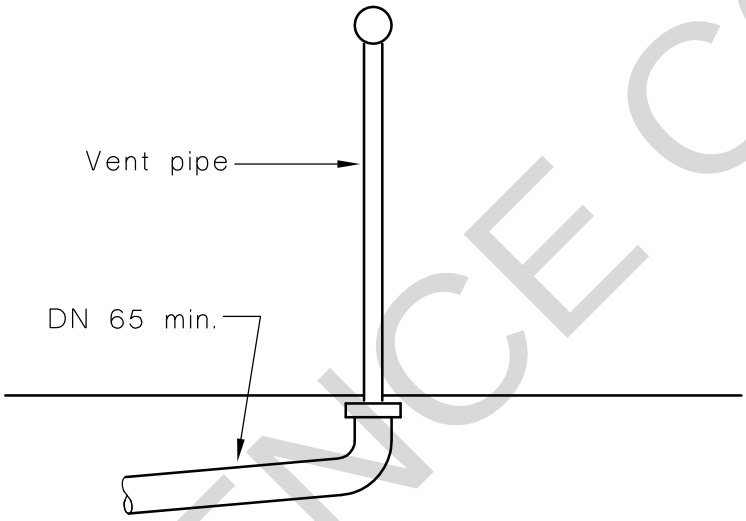

FIGURE 3.9.3.1 CONNECTION OF VENT TO DRAIN

3.9.3.2 *Rating of vents*

Where two or more vents are directly connected to a drain, these vents may take the place of the single vent required by Table 3.9.3.1, provided the sum of the ratings is equal or greater than the vent rating for the single vent as shown in Figure 3.9.3.2.

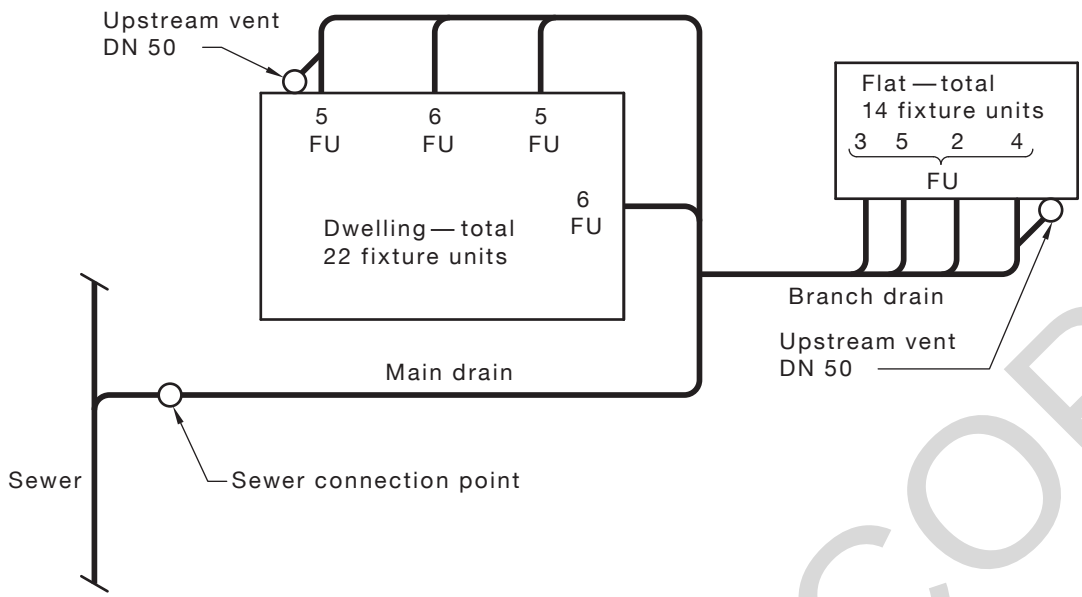

Example:

Total loading units discharging to drain = 36 FU.

Required size of drainage vent = DN 65—(Rating of 2) ~~refer to~~ see Table 3.9.3.1.

The two other stack or drainage vents (assuming the branch drain is over 10 m) in combination may take the place of a single DN 65 or DN 50 vent.

NOTE: The section of drains to be vented shall not be reduced below the rating of venting required.

FIGURE 3.9.3.2 VENT SIZING

3.9.3.3 *Connection of vent to drain*

Where the minimum size of DN 65 for a drain line exists, a minimum DN 50 vent pipe may be connected as shown in Figure 3.9.3.1.

3.9.3.4 *Water closet pans in toilet blocks*

Water closet pans connected to a DN 100 drain in toilet blocks shall be vented in accordance with the following:

(a) The vents shall be positioned to divide the water closet pans into approximately equal groups.

(b) Where 10 or more water closet pans, in any ground-floor toilet block, are each separately connected to a vented drain, and the spacing of respective branch drain connections to the vented drain are such that they are 2 m apart or less, one DN 50 vent, located between the last and second last pan, shall be provided for the first 10 pans and an additional DN 50 vent shall be provided for each additional 10 pans or part thereof.

(c) Each vent shall branch from the vented drain, or from a water closet pan branch.

3.10 UNVENTED BRANCH DRAINS

3.10.1 General

The requirements of this Clause (3.10) shall apply to—

(a) ground-floor connections to a vented drain installed on grade, located below or above the ground (see Clause 10.11); or

(b) connections to a disconnector or overflow relief gully.

3.10.2 Sizing

The size of an unvented branch drain shall be such that the sum of the fixture unit ratings, as given in Table 6.2(A), shall not exceed the maximum loading specified in Table 3.10.2.

TABLE 3.10.2

SIZE OF UNVENTED BRANCH DRAINS

Size of pipe DN	Maximum fixture unit loading
65	5 fixture units (excluding a water closet pan or slop hopper); or 10 fixture units from one floor waste gully
80	12 fixture units (including not more than one water closet pan or slop hopper)
100	30 fixture units (including not more than two water closet pans or 2 slop hoppers)

3.10.3 Maximum length

The total length of an unvented branch drain, including the length of the fixture discharge pipe, shall be not greater than the following:

(a) 10 m from the vented drain to the weir of the trap, provided the length of the discharge pipe does not include a vertical drop, between the crown of the trap and the invert of the branch drain exceeds—

(i) 2 m for water closet pans with DN 80 discharge pipes;

(ii) 1.5 m, for basins and bidets fitted with 'S' traps; and

(iii) 2.5 m for all other fixtures.

(b) 10 m from the weir of a disconnector gully.

(c) 10 m from a sullage dump point.

NOTE: For typical example of the above, see Figure 3.10.3.

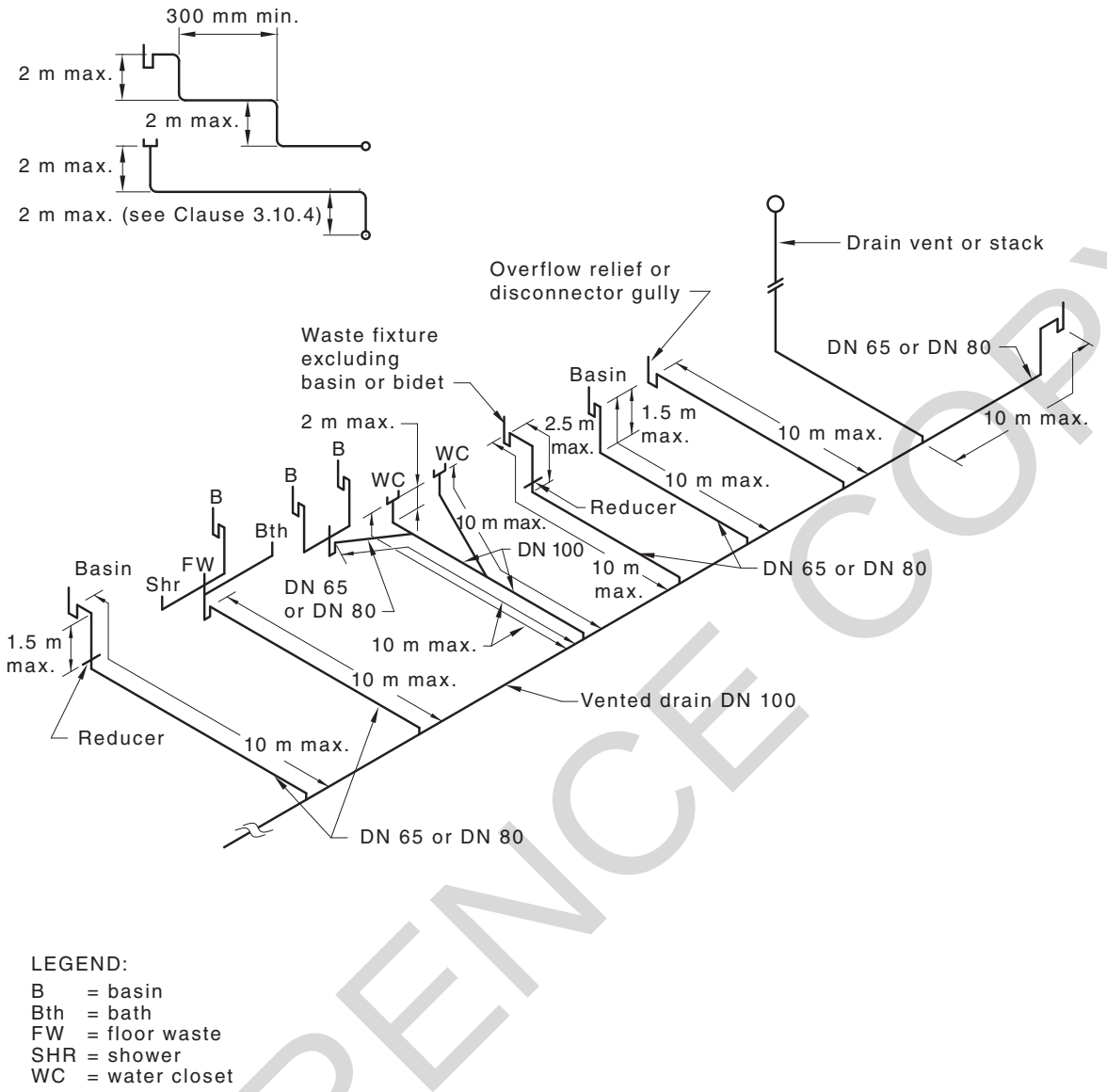

NOTE: Total length of branch connections to fixtures to not exceed 10 m.

FIGURE 3.10.3 TYPICAL CONNECTIONS OF GROUND-FLOOR FIXTURES TO UNVENTED BRANCH DRAINS

3.10.4 Vertical sections

Where the fixture discharge pipe is the same size as the unvented branch drain to which it connects, the drain to the trap shall have a maximum of two vertical jump-ups, each not exceeding 2 m in height, and separated by not less than 300 mm of graded pipe.

3.10.5 Connection of fixture discharge pipes

Where fixtures are connected to unvented branch drains, the requirements for the fixture discharge pipes shall be the same configuration as for the connection of fixtures to group vented branches and shall ~~comply~~ conform with ~~Clauses~~ Clause 8.5.7.5.4 Connections of basins and bidets and Clause 8.5.7.5.5 Connection of all other fixtures and Clause 3.10.3 for maximum length of unvented drains.

3.11 UNVENTED DRAINS DISCHARGING TO GULLIES

3.11.1 General

A drain that receives the discharge from waste fixtures only may be connected to a gully.

The maximum fixture unit loading and size of unvented branch drain shall ~~comply~~ conform with Table 3.10.2.

3.11.2 Length of unvented section

The combined length of an unvented drain and fixture discharge pipe shall not exceed 10 m. The fixture discharge pipe shall ~~comply~~ conform with Clauses 3.10.3 and 3.10.5. If the combined length of the unvented drain and fixture discharge pipe exceeds 10 m, the branch line shall be vented in accordance with Clause 3.9.2 or Clause 6.9.

3.12 INLET PIPE TO DISCONNECTOR GULLY

Where the inlet pipe to a disconnector gully is DN 65 or larger, multiple branches may be connected to such inlet pipe, provided all fixture traps are within 10 m of the disconnector gully and within the fixture unit loading for pipe size and the disconnector gully.

3.13 RESTRICTION ON CONNECTIONS IN PROXIMITY TO A STACK

Discharge pipes from fixtures shall only connect to a drain in proximity to a stack in accordance with Clause 6.7 and Figure 6.7.1.

3.14 CONNECTION OF BASEMENT FIXTURES

Fixtures installed in basements or other locations, where surcharge could occur, shall be connected to the sewerage system by means of a pumping installation ~~complying~~ conforming with Section 12.

3.15 CONNECTIONS IN FLOOD-PRONE AREAS

3.15.1 Inlet above flood level

In areas subject to known flooding, the inlet to a sanitary plumbing and drainage system shall be positioned at least 150 mm above the declared flood level.

3.15.2 Inlet below flood level

Where inlets to fixtures, fittings or appliances cannot be installed at a height of 150 mm above the declared flood level, they shall be connected as follows:

(a) The discharge of the fittings, fixtures and appliances shall be raised by ejector or pump ~~complying~~ conforming with Section 12 to a height required by the regulatory authority and discharged into the sewer as and where directed.

(b) An automatic, float-controlled device or similar device shall be installed to ensure that the ejector or pump ceases to operate during periods of flooding.

3.16 RE-USE OF EXISTING SANITARY DRAINS

3.16.1 Re-use where buildings are demolished or removed

When a building containing sanitary plumbing and drainage is demolished or removed from site and a new building constructed, the following requirements shall apply to the use of existing sanitary drains up to the point of connection:

(a) Mortar-jointed vitrified clay, mortar-jointed concrete, asbestos cement and fibre-reinforced cement pipes shall not be re-used unless they have been renovated using a structural plastics liner in accordance with Clause 3.16.3.

(b) Drains constructed of other materials shall not be re-used unless they have been verified for ~~compliance~~ conformance in accordance with the relevant clauses of this Standard and tested in accordance with Section 15 and found to be satisfactory.

Drains that do not ~~comply~~ conform with requirements listed above shall be replaced or repaired and retested.

3.16.2 Re-use in existing buildings

~~1~~For an existing building, ~~where major~~ including alterations or additions that will involve additional fixtures being connected to the existing drain~~ are to be carried out~~, ~~consideration should be given to the requirements of this Clause.~~if any section of an existing drain is found to be defective it shall be renovated in accordance with Clause 3.16.3 or a new section of drain installed.

3.16.3 Renovation techniques

3.16.3.1 *Cured in place pipe (CIPP)*

The renovation of a drain by the CIPP technique shall be in accordance with Appendix G with the exception of Clause G3(g) which does not apply.

NOTE: CIPP renovation is the lining of a drain with a flexible tube impregnated with a thermosetting resin. This produces a rigid pipe after the resin has cured.

3.16.3.2 *Other renovation techniques*

Other renovation techniques that can be utilized in the renovation of existing sanitary drains shall be as follows:

(a) *Lining with discrete pipes* Lining with short lengths of pipe which are jointed to form a continuous pipe one by one during insertion, the cross-section of the lining pipe remaining unchanged.

(b) *Lining with continuous pipes* Lining with a pipe made continuous prior to insertion, where the diameter of the lining pipe remains unchanged.

(c) *Lining with close-fit pipes* Lining with a continuous pipe for which the cross-section is reduced to facilitate installation and expanded after installation to provide a close fit to the existing pipe.

(d) *Lining with spirally-wound pipes* Lining with a profile strip, spirally wound to form a continuous pipe after installation.

Appendix G is applicable to the above renovation techniques with the exception of Clause G3(c) and G3(f) which do not apply.

NOTE: Further information on the renovation techniques for these pipes is available in ISO 11295 and the ISO 11296 series (see Bibliography).

~~2If any section of the existing drain is found to be defective, it should be satisfactorily repaired or a new section of drain should be installed.~~

3.17 DUMP POINTS

3.17.1 Soil waste dump points

Dump points, for discharging the contents of holding tank type toilets within caravans and relocatable dwellings shall be in accordance with Figure 3.17.1 and the following:

(a) The concrete base shall be graded to the outlet at a grade of not less than 1 in 60.

(b) The outlet pipework shall be DN 80 or DN 100.

(c) The bayonet connection shall include a sealing cap and hose coupling, and shall be at least 25 mm clear of any obstruction.

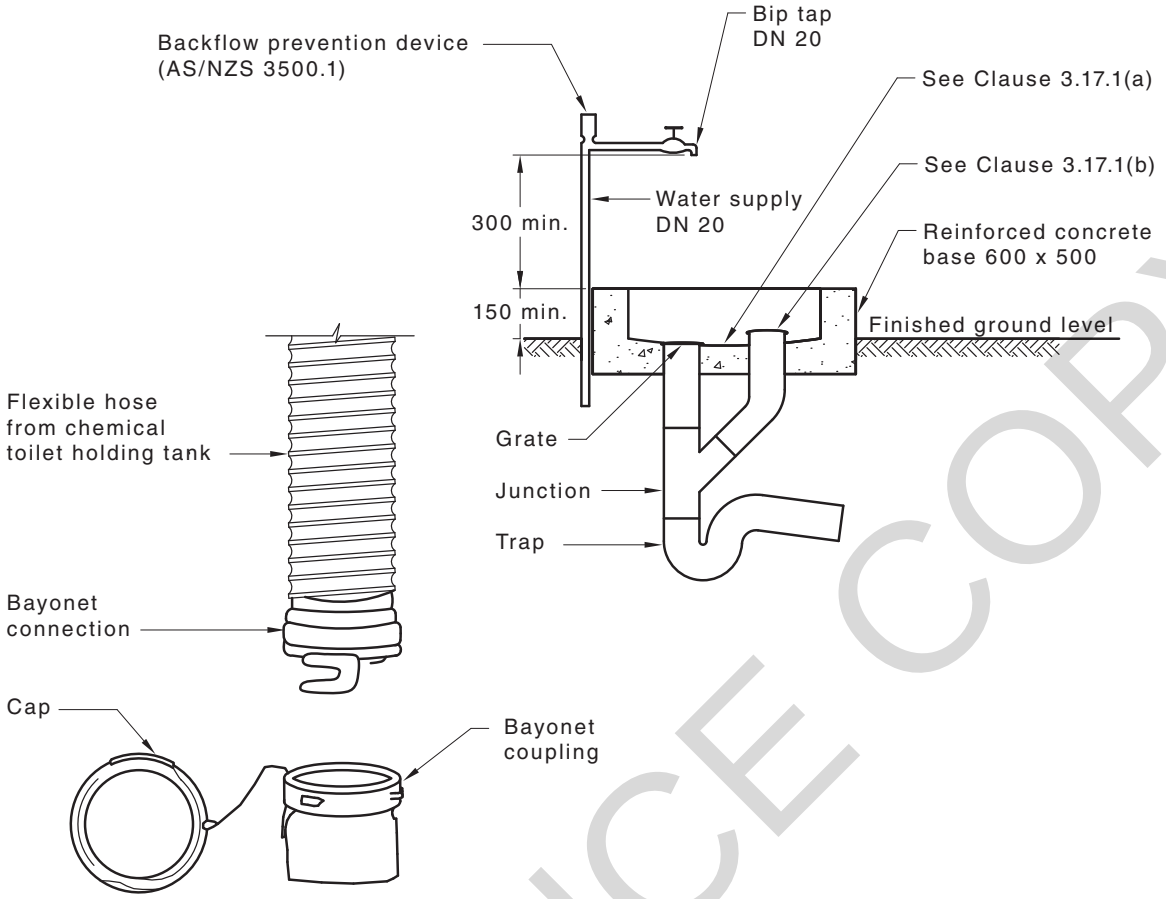

(a) Soil waste dump point

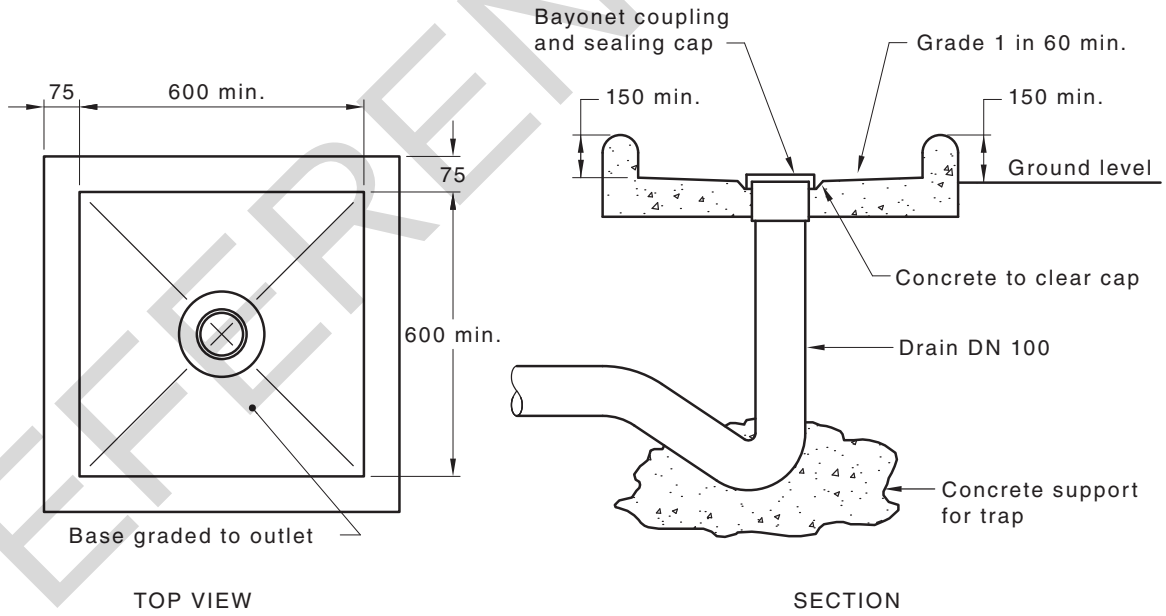

(b) Alternative soil waste dump point

NOTE: Bib tap and backflow prevention device to be provided.

DIMENSIONS IN MILLIMETRES

FIGURE 3.17.1 SOIL DUMP POINTS

3.17.2 Connection points for short-term sites

Where sullage connection points are provided to serve individual caravans or mobile home sites, they shall be constructed in accordance with Figure 3.17.2(A) or Figure 3.17.2(B).

Sullage points shall be positioned to obtain the shortest connection to the caravan and shall be not more than 10 m from the vented drain.

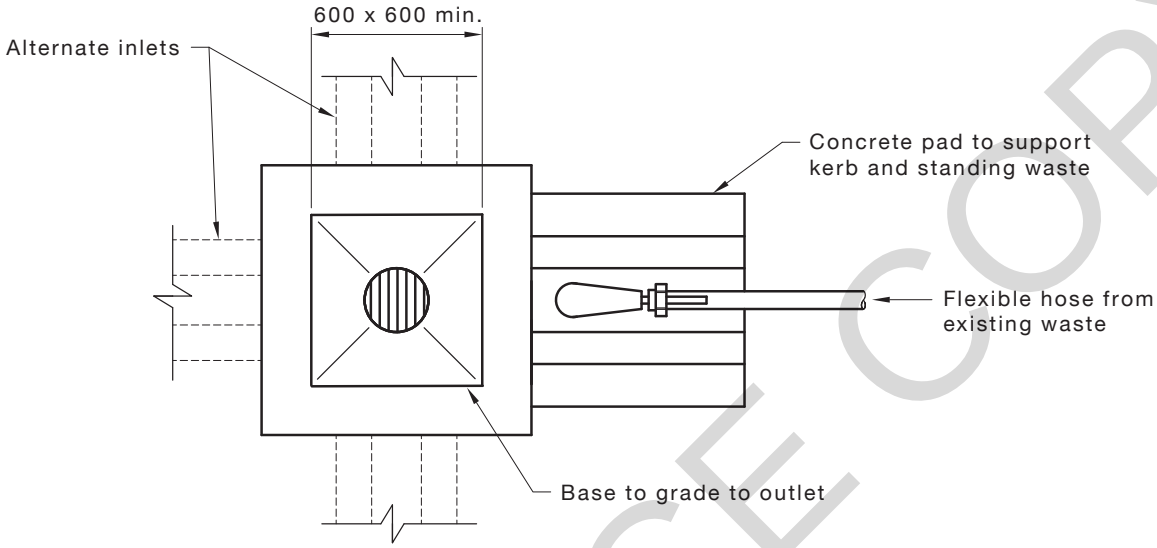

TOP VIEW

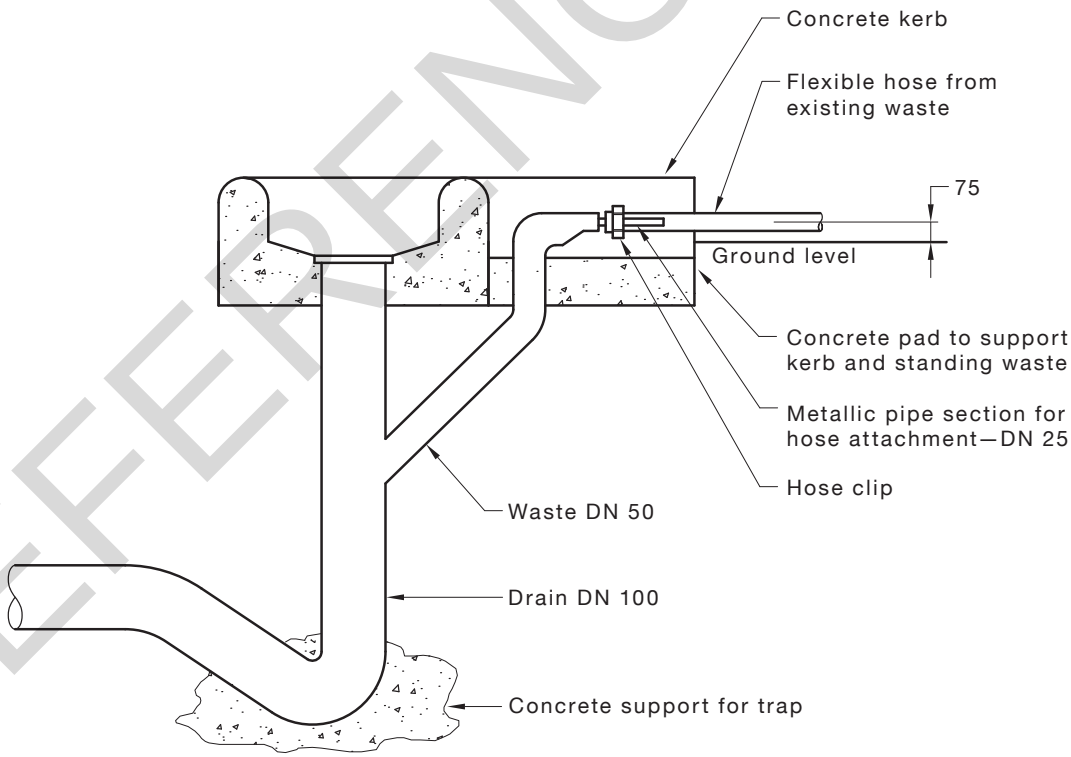

SECTION

NOTE: Hose tap and backflow prevention device to be provided.

DIMENSIONS IN MILLIMETRES

FIGURE 3.17.2(A) SULLAGE DUMP POINT

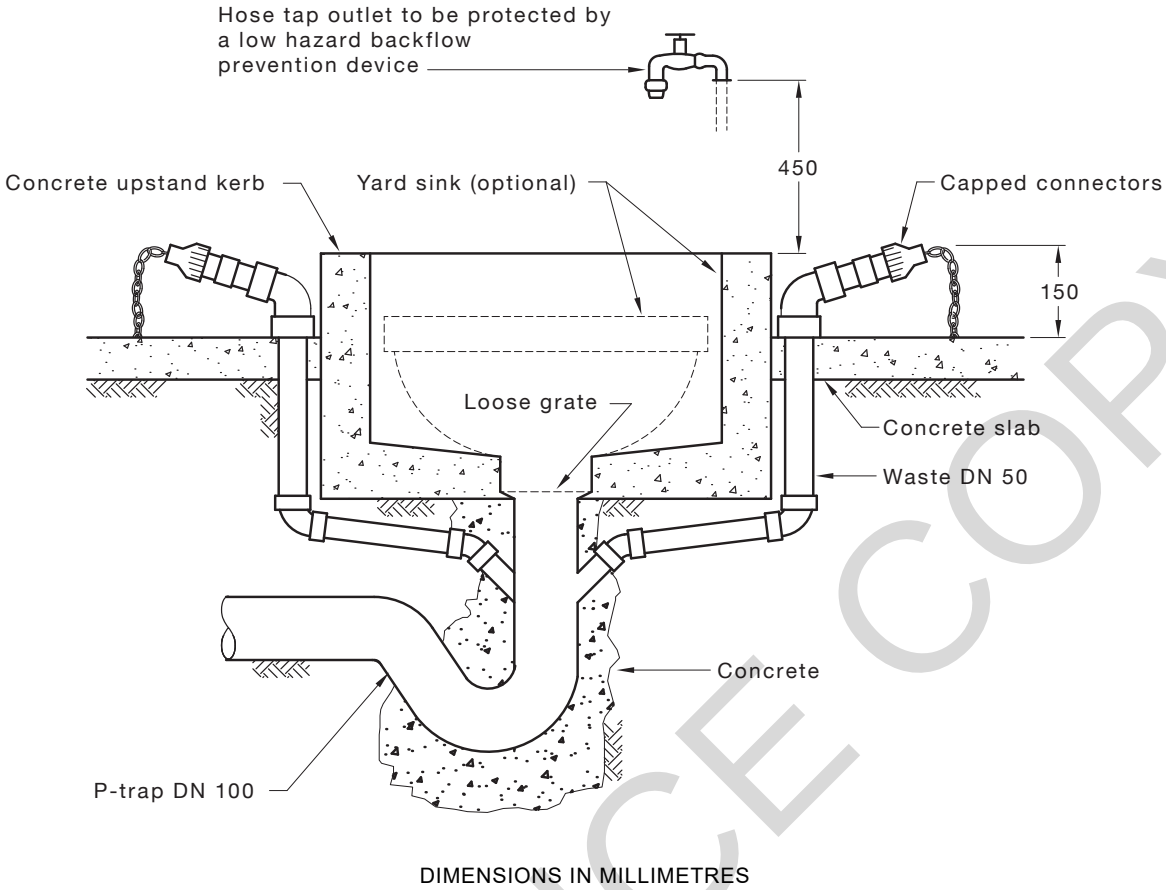

FIGURE 3.17.2(B) SULLAGE DUMP POINT WITH MULTIPLE INLETS

3.18 DRAINS ~~TO~~ CONNECTED TO NETWORK UTILITY OPERATOR VACUUM SEWAGE SYSTEMS

Drains connected to vacuum sewerage systems shall be installed in accordance with the following:

(a) An inspection shaft connected to the drain with a junction shall be placed as close as practicable to, and upstream of, the collection tank.

(b) The junction inlet to the inspection shaft shall be against the grade of the drain so that any rodding of the line is in the direction away from the collection tank.

(c) Where more than one drain is connected to a collection tank, the spill level of both overflow gullies of the drains shall be installed level with each other wherever practicable.

(d) A DN 100 open vent pipe shall be provided at the upstream end of each drain connected to the collection tank and a DN 100 downstream vent shall be located within 10 m of the collection tank. No fixtures shall be connected between the collection tank and the downstream vent connection.

NOTES:

1 In addition to the open vents, air admittance valves, installed in accordance with Clause 6.9, may be used to provide additional venting of drains connected to a collection tank.

2 Jump-ups should be avoided.

3 See Section 16 for vacuum drainage systems.

3.19 COMMON EFFLUENT DRAINAGE SYSTEM

3.19.1 General

All sanitary plumbing and sanitary drainage in common effluent drainage systems shall ~~comply~~ conform with the relevant sections of this Standard.

3.19.2 Drainage connections

Drains connected to common effluent drainage systems shall be installed in accordance with the following:

(a) Discharge from fixtures shall pass through a septic tank.

NOTE: Where this is impracticable due to location and available fall, discharge from waste fixtures may pass through a sullage tank.

(b) Drains from septic or sullage tanks to the common effluent drain shall be not less than DN 80 and not more than DN 100 and shall be laid at a grade of not less than 1% (1 in 100).

(c) Induct vents shall not be installed on septic tanks. Where induct vents are installed on an existing septic tank, they shall be removed before connecting the septic tank to a common effluent drainage system.

(d) Inspection openings shall be provided in accordance with Clause 4.7 and shall be included on—

(i) the inlet to an on-site wastewater treatment unit; and

(ii) the outlet of the on-site wastewater treatment unit, within 2.5 m of the tank, where the connecting drain is greater than 10 m in length.

(e) Existing and new drains shall be tested in accordance with Section 15.

(f) Soakage trenches, and stormwater, roof water and subsoil water drainage shall not be connected to a common effluent drainage system.

NOTE: Typical connections are shown in Figures 3.19.2(A), 3.19.2(B), 3.19.2(C) and 3.19.2(D).

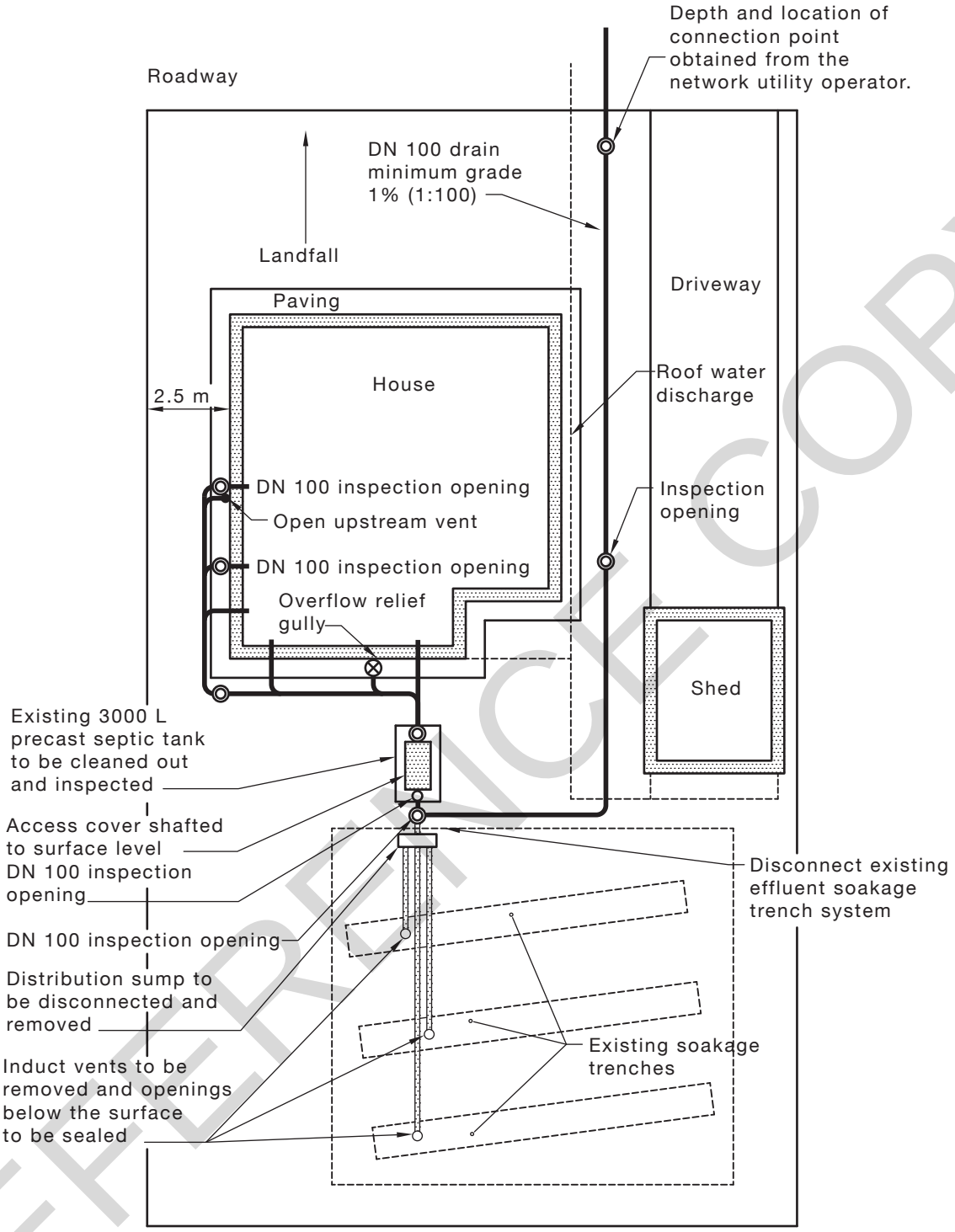

FIGURE 3.19.2(A) TYPICAL SITE LAYOUT PLAN SHOWING CONNECTION DETAILS FOR AN ALL-WASTE SEPTIC TANK SYSTEM

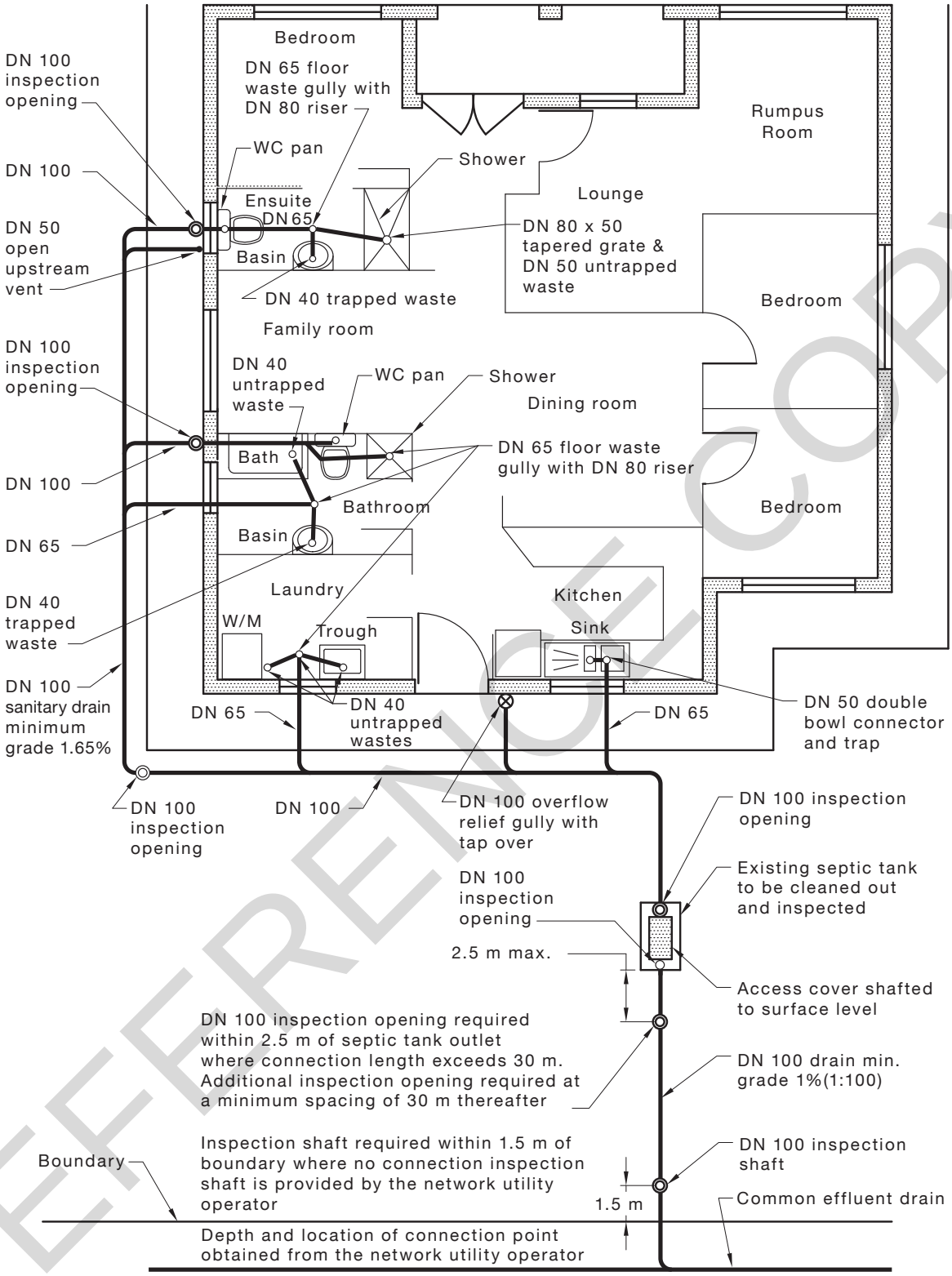

FIGURE 3.19.2(B) TYPICAL CONNECTION OF SEPTIC TANK TO COMMON EFFLUENT DRAIN (EXISTING ALL-WASTE SEPTIC TANK INSTALLATION ONLY)

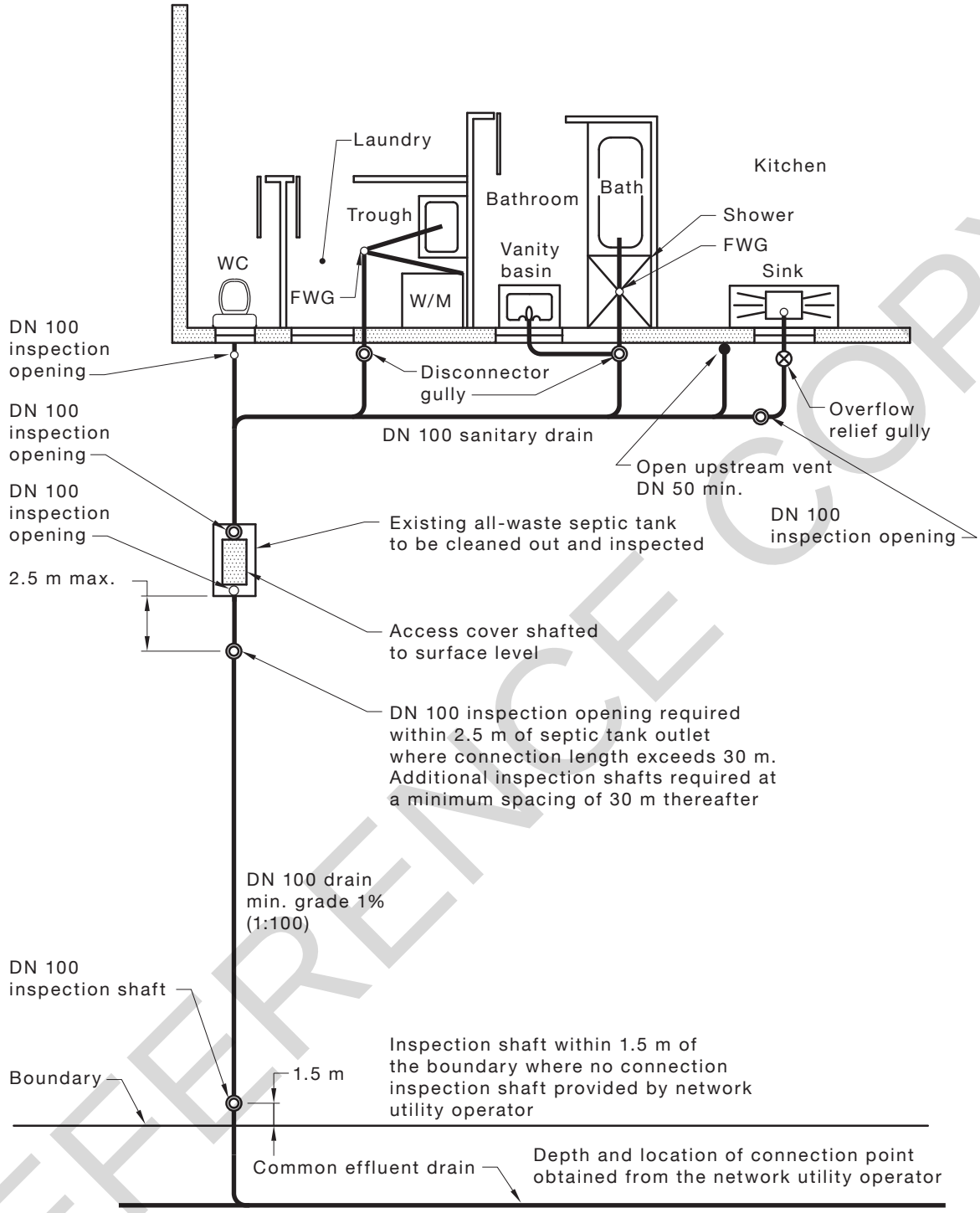

FIGURE 3.19.2(C) TYPICAL CONNECTION DETAILS FOR AN ALL-WASTE SEPTIC TANK SYSTEM

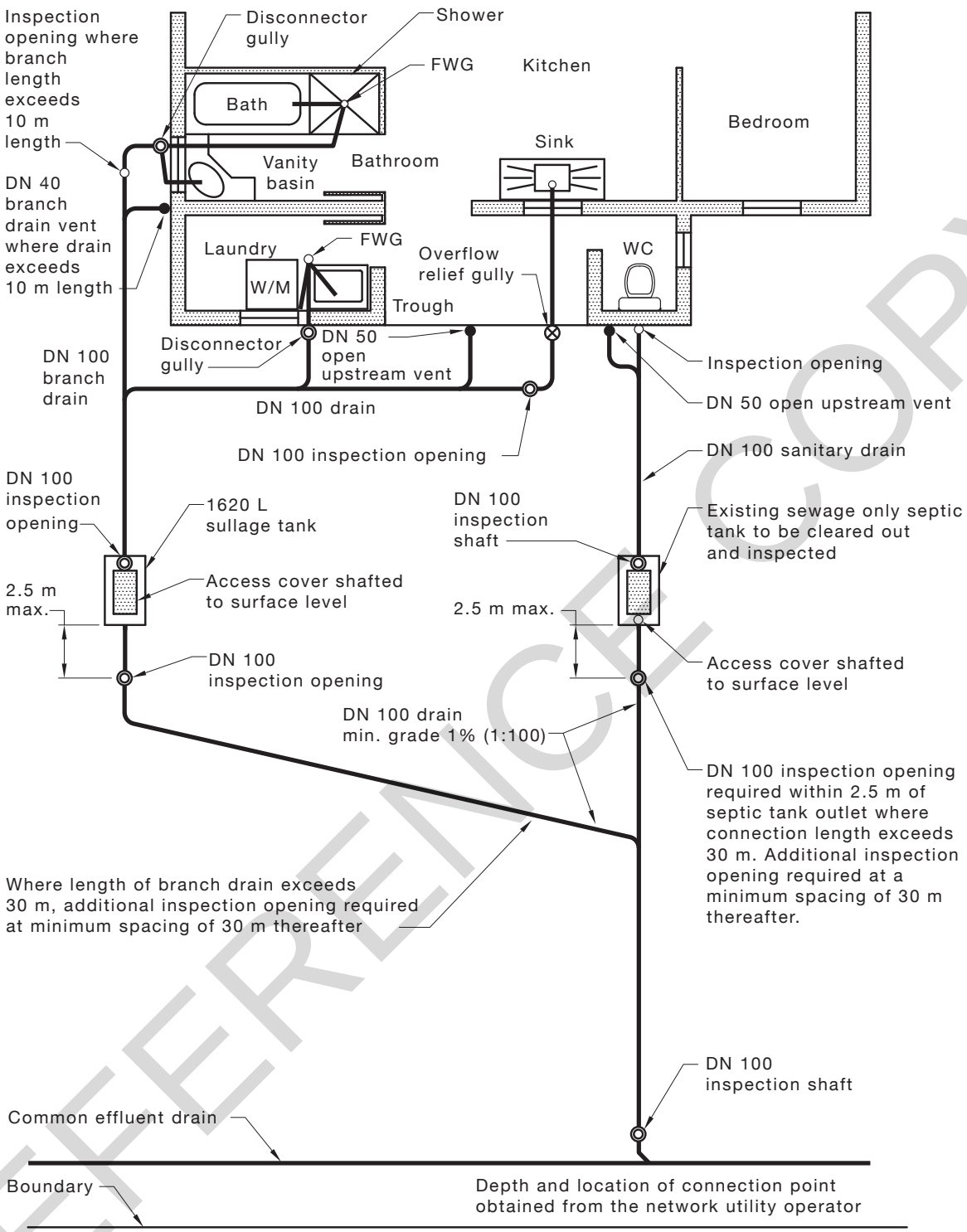

FIGURE 3.19.2(D) TYPICAL CONNECTION DETAILS FOR A SEPTIC TANK AND SULLAGE TANK SYSTEM

3.19.3 Septic tanks

Where septic tanks are part of the effluent system, they shall be sized, constructed and installed in accordance with AS/NZS 1546.1.

Septic tanks shall be inspected for soundness and hydrostatically tested before connection to the common effluent drain.

3.19.4 Sullage tanks

Sullage tanks shall be sized, constructed and installed in accordance with AS/NZS 1546.1.

Sullage tanks shall be inspected for soundness and hydrostatically tested before connection to the common effluent drainage system.

NOTES:

1 The satisfactory performance of common effluent drainage systems is dependent on regular cleaning out and desludging of each septic tank and sullage tank, which should be done once every five years, or sooner, if necessary.

2 The connecting drain from the septic tank to the common effluent drain may require flushing from time to time.

3.20 ON-SITE WASTEWATER TREATMENT UNITS

On-site wastewater treatment units shall be installed in accordance with AS/NZS 1546.1, AS/NZS 1546.2 or AS/NZS 1546.3, as appropriate.

SECTION 4 DRAINAGE SYSTEM

4.1 SCOPE OF SECTION

This Section specifies requirements for components of sanitary drainage systems.

NOTE: Requirements for components of vacuum drainage system areas are covered in Section 16.

4.2 POINT OF CONNECTION

4.2.1 General

Drains connected to the network utility operator's sewer shall be not less than DN 100.

NOTES:

1 When connecting fixtures that operate to a sewer by gravity, care should be taken to ensure that the flood level rim of the lowest fixture or trap is of adequate height above the soffit of the sewer so as to avoid the sewer discharging onto the property under normal operating conditions.

2 Where the height of the lowest fixture or trap in Note 1 cannot be achieved, then consideration should be given to the lowest fixture or trap discharging to the sewer—

(a) through a reflux valve in accordance with Clause 4.5; or

(b) by means of a sewage ejector or pump, ~~complying~~ conforming with Section 12.

3 Where a sanitary drain is to connect to a network utility operator's sewer, information relating to any restrictions regarding soffit requirements and the point of connection should be obtained from the network utility operator prior to commencing any design.

4 In Australia, some network utility operators manage combined stormwater and sewerage systems. In these cases, connection of surface water and roof water may be permitted to a sanitary plumbing and drainage system. Before any connection of surface water or roof water is made to a sanitary plumbing or drainage system, check with the relevant network utility operator.

C4.2.1 *Whenever drainage works are carried out, necessary measures should be taken to protect the network utility operator's sewers from damage and to prevent the entry of—*

(a) extraneous water;

(b) soil, sand or rock;

(c) the contents of any septic tank; or

(d) any other substance, the discharge of which would impede the operation of the sewer.

4.2.2 Tidal or water-charged locations

Where a point of connection is provided in ground affected by tidal water or a high water table, the connection shall be made so as to prevent the ingress of water to the sewer.

4.3 DRAINS

4.3.1 Below ground

Drains below ground shall—

(a) be laid to an even grade, be straight and have no lipped joints or internal projections;

(b) have a minimum number of changes of grade and direction;

(c) be sized in accordance with the fixture unit loading given in Table 3.3.1;

(d) be continuously supported under the barrel, other than for cast iron and ductile iron pipes and fittings;

(e) be protected against damage;

(f) be watertight;

(g) have the interior of each pipe cleared of any foreign matter before it is laid and prior to commissioning; and

(h) have a jump-up installed to connect drains at different elevations.

NOTES:

1 The person or authority having rights over an easement may have specific requirements for drains laid in proximity of the easement or for drains laid within or passing through the easement.

2 For protection against termite infestation under slab and penetrations of slab, see NCC.

4.3.2 Above ground under buildings

Drains may be installed above ground under buildings, as follows:

(a) The drain shall be protected from mechanical damage.

(b) Support and fixing shall ~~comply~~ conform with Clause 10.2.

(c) Provision for expansion shall be made appropriate to materials and their application.

(d) The drain shall satisfy the requirements of Clause 3.6 as appropriate.

4.3.3 Changes of direction

Changes of direction or gradient in drains shall be effected by the use of bends or junction fittings, or at inspection chambers.

4.3.4 Maximum length of fixture discharge pipes

The maximum length of fixture discharge pipe without venting shall be in accordance with Appendix C.

4.4 INSPECTION SHAFTS AND BOUNDARY TRAPS

4.4.1 General

The main drain shall be provided with either an inspection shaft in non-boundary trap areas, or a boundary trap in boundary trap areas, located at or near the point of connection to the sewer.

NOTES:

1 ~~NOTE:~~Inspection shafts and boundary traps located in an area that is subject to flooding should comply with the requirements of the relevant authority.

2 Boundary trap or inspection shafts cannot terminate within buildings as defined in the BCA area referred to as habitable.

4.4.2 Inspection shafts and boundary trap risers

4.4.2.1 *Installation*

The following applies to inspection shafts and boundary trap risers:

(a) They shall terminate at or near ground or surface level with a removable airtight inspection cap of the same diameter as the shaft or riser. For boundary trap risers, a low level vent shall be installed in accordance with Clause 3.9.2.3.

(b) The cap shall be sealed into the shaft or riser.

(c) Where the inspection shaft or boundary trap riser is subject to vehicular traffic, the cap may be installed below finished surface level. Access shall be provided in accordance with the following:

(i) A heavy-duty trafficable cover shall be installed at finished surface level above and independent of the cap.

(ii) The cover shall be supported so that no load can be transmitted onto the shaft.

(iii) The shaft shall be terminated immediately below the underside of the cover.

(d) Risers shall be installed vertically with no offsets greater than 5°.

4.4.2.2 *Location*

The inspection shaft or boundary trap riser shall be located—

(a) wholly within the property served;

(b) as close as practicable to the boundary;

(c) clear of all authority easements;

(d) as near as practicable to the point of connection;

(e) in the open air, except as provided in Clause 4.4.2.3;

(f) in an accessible position; and

(g) so that the inspection cap is not covered from view, except as allowed in Clause 4.4.2.1(c).

4.4.2.3 *Alternative locations*

Where the requirements of Clause 4.4.2.2 cannot be met, an inspection shaft and boundary trap riser may be sited at other locations as follows:

(a) *Under cover* An inspection cap may be installed under a roofed area, provided the cap is—

(i) located at finished surface level; and

(ii) readily accessible for inspection, rodding and plunging with not less than 1 m clear space vertically above the inspection cap.

(b) *In a recess* If all or part of a building is constructed up to the boundary of the property, and if this makes it impracticable to site the inspection cap in the open air or within a building under cover, the inspection cap may be installed within a recess constructed in the wall of the building, provided—

(i) the inspection cap is airtight;

(ii) the recess is constructed to provide a clear space of at least 1 m above the inspection cap;

(iii) at least 100 mm clear space is provided on each side and to the rear of the inspection cap; and

(iv) the recess has a removable panel.

4.4.3 Installation of inspection shafts

4.4.3.1 *General*

Inspection shafts shall be provided at the lower downstream end of a drain in accordance with the following:

(a) A junction shall be installed in the graded drain with the branch of the junction extended vertically upwards to the surface to form a shaft.

(b) Where a jump-up is constructed within a property and is not more than 3 m from the point of connection, the jump-up shall be extended upwards to the surface level to form a shaft.

(c) No branch drain or fixture discharge pipe shall be connected to an inspection shaft where the shaft is constructed from a square junction installed in a graded drain.

(d) The jump-up shall be supported by placing a concrete footing not less than 100 mm thick under the bend, with a width of not less than 100 mm beyond the sides of the shaft, and extending up to the centre-line of the drain.

An inspection chamber with an open channel or maintenance shaft in accordance with AS/NZS 4999 may take the place of an inspection shaft.

4.4.3.2 *Size*

Inspection shafts shall be—

(a) the same size as the drain for drains up to DN 150;

(b) not smaller than DN 150 for drains larger than DN 150; or

(c) the same size as the jump-up where an inspection shaft is constructed by extending a jump-up.

4.4.4 Installation of boundary traps

4.4.4.1 *Outside buildings*

Boundary traps located outside buildings shall be installed in accordance with the following:

(a) Where the point of connection is provided in a vertical section of the sewer within the property, a boundary trap shall not be installed in the same trench as the sewer jump-up.

(b) A downstream vent ~~complying~~ conforming with Clause 3.9.2.2 shall be installed at the boundary trap riser.

(c) Boundary traps of materials, other than cast iron, shall be directly supported on a solid foundation by placing under the trap a concrete pad that shall—

(i) be not less than 100 mm thick; and

(ii) extend upwards to the inlet socket of the trap.

(d) The shaft shall be protected and supported during the installation and placement of backfilling.

4.4.4.2 *Inside buildings*

Boundary traps located inside buildings and installed above the ground or floor surface shall be—

(a) protected against mechanical damage;

(b) located as close as practicable to and within the boundary line; and

(c) supported independently of the drain.

4.4.4.3 *Size*

The size of the boundary traps and risers shall be not smaller in size than the drain that discharges to it, or smaller than DN 100.

4.5 REFLUX VALVES

4.5.1 Location

A reflux valve shall be located wholly within the property and be accessible.

NOTE: This may be achieved by using either an access chamber or a riser shaft to the finished surface level.

4.5.2 Installation

A reflux valve shall be installed where—

(a) the minimum height of the overflow relief gully and the lowest fixture specified in Clause 4.6.6.6 cannot be achieved; or

(b) a fixture is located in a basement and discharges to a sewage ejector or wet well and could be affected by a surcharge from a fixture at a higher level.

4.5.3 Surcharging sewer

Where a reflux valve is to be installed to protect against surcharges, it shall be located in accordance with the following:

(a) Where the drain has an inspection shaft, the reflux valve shall be installed adjacent to the shaft.

(b) Where the drain has a boundary trap, the reflux valve shall be located immediately downstream from and adjacent to the outlet of the boundary trap.

4.5.4 Reflux valve chambers

Except where a reflux valve is installed in an accessible position within a building or can be fully serviced and maintained from finished surface level, all reflux valves shall be installed within an inspection chamber ~~complying~~ conforming with Clause 4.8.

NOTE: For reflux ~~vavles~~valves, see Clause 10.12.2.

4.6 GULLIES

4.6.1 General

Gullies may be used for one or more of the following purposes:

(a) As relief in the event of sewage surcharge (overflow relief gully).

(b) To provide disconnection between waste discharges and the remainder of the sewerage installation (disconnector gully).

4.6.2 Installation

Gullies shall—

(a) be of the self-cleansing type;

(b) have the top of the gully riser provided with a grating to relieve surcharge; and

(c) where installed below ground—

(i) be supported on a concrete footing of a thickness not less than 100 mm, with a width not less than 100 mm beyond the sides of the trap and extending upwards to not less than 100 mm above the base of the gully; and

(ii) have the top of the gully riser protected from damage at finished surface level (e.g. by means of a concrete surround).

4.6.3 Maintenance of water seal

The water seal shall be permanently maintained in a gully (see Note 1) by—

(a) the discharge from a waste fixture or floor waste gully in accordance with Table 4.6.3;

(b) the discharge from a waste stack of not more than five floors in height;

(c) water from a hose tap located a minimum of 450 mm above the grating where no waste pipe discharges into gully;

(d) the discharge from temperature/pressure-relief valves and/or expansion control valves (see Note 2);

(e) the discharge from a charge pipe in accordance with Figure 4.6.8.1 and Clause 4.6.8; ~~or~~

(f) discharges from refrigeration condensate lines~~.~~: or

(g) waste fixtures or waste stacks connected into a gully riser, discharging below the level of the grating and above the surface level of the water seal (see Figure 4.6.6.5).

NOTES:

1 For two examples of water seals permanently maintained in a gully, see Figure 4.6.6.5.

2 For temperature limitations, see Clause 2.3(b).

TABLE 4.6.3

CONNECTION OF FIXTURES TO DISCONNECTOR GULLIES

Fixture	Maximum unvented length of waste pipe m
Basin or bidet with DN 40 traps and waste pipes	3.5
All other waste fixtures and floor waste gullies with DN 50 or smaller waste pipes	6
Floor waste gullies and fixtures with DN 65 or larger waste pipes	10

NOTES:

1 Bends to be kept to a minimum.

2 For New Zealand, bidets do not discharge to disconnector gullies.

4.6.4 Soil fixtures

Discharges from soil fixtures shall not connect, either directly or indirectly, to a disconnector or overflow relief gully.

C4.6.4 *In Australia, some network utility operators manage combined stormwater and sewerage systems. In these cases, connection of surface water and roof water may be permitted to a sanitary plumbing and drainage system. Before any connection of surface water or roof water is made to a sanitary plumbing or drainage system, check with the relevant network utility operator.*

4.6.5 Disconnector gullies inside buildings

A disconnector gully may be located within a building, provided—

(a) the gully riser extends to the finished surface level and is sealed with a removable airtight cover;

(b) a DN 50 vent pipe, branching from the riser pipe or a fitting, extends at a grade of not less than 1.25% and terminates with a grating at an external wall of the building—

(i) above the overflow level of the lowest internal fixture connected to the sealed disconnector gully;

(ii) at least 75 mm above the finished surface level; and

(iii) in areas likely to be inundated, in ~~compliance~~ accordance with Clause 4.6.6.8;

(c) fixtures or appliances are not connected to the vent pipe; and

(d) air admittance valves are not used to vent sealed disconnector gullies.

Where it is not practicable to extend the vent to an external wall, the vent may terminate in the atmosphere external to a building in accordance with Clause 6.8.4.

4.6.6 Overflow relief gullies

4.6.6.1 *General*

At least one overflow relief gully shall be installed in the drain, except as provided in Clause 4.6.6.2. Disconnector gullies ~~complying~~ conforming with the requirements of Clauses 4.6.6.3 to 4.6.6.7 may be used as overflow relief gullies.

NOTE: For multi-unit developments, see Section 14.

4.6.6.2 *Omission of overflow relief gully*

An overflow relief gully may be omitted where—

(a) the drain serves fixtures in a toilet block or an amenities building and is located in a park or reserve, provided the floor of the building is graded to fall towards an external doorway;

(b) the site is entirely built on and it is not possible to locate the gully in any of the alternative locations specified in Clause 4.6.6.5, and the fixtures on the ground floor discharge through a reflux valve to the sewer by gravitation;

(c) the lowest fixtures connected are located on floor levels that are 3 m or more above ground surface level at the point of connection to the sewer; or

(d) an alternative overflow relief point(s), equal to or the equivalent cross-section area of the drain served, is provided to the drainage systems.

4.6.6.3 *Size*

The size of overflow relief gullies shall be determined from the size of the largest section of the main drain as given in Table 4.6.6.3.

TABLE 4.6.6.3

SIZE OF OVERFLOW RELIEF GULLIES

Size of main drain DN	Size of gully outlet DN
100 and 150	100
>150	150

4.6.6.4 *Location*

The overflow relief gully shall be located—

(a) within the boundaries of the property;

(b) external to the building;

(c) so that the top of the gully is accessible and positioned where any discharge will be noticeable; and

(d) with clear access for more than 2 m above the top of the gully grate, and not be enclosed.

4.6.6.5 *Alternative locations*

Where it is not possible to ~~comply~~ conform with Clause 4.6.6.4, an overflow gully may be located as follows:

(a) Recessed within an external wall [see Figure 4.6.6.5(b)], provided—

(i) the recess is not less than 300 mm wide and 600 mm high, measured above the top of the gully riser;

(ii) the centre of the riser is not greater than 300 mm from the face of the building and the riser is fully accessible; and

(iii) the base of the recess is graded away from the building.

(b) Located within a building [see Figure 4.6.6.5(a)], provided—

(i) the gully riser extends to floor level and is sealed with a removable airtight cover;

(ii) an overflow pipe of the same size as the gully riser is installed at a grade of not less than 1.25% and terminates in the open air at an external wall of the building in accordance with Clauses 4.6.6.6 and 4.6.6.7, and areas affected by flooding ~~comply~~ conform with Clause 4.6.6.8;

(iii) the overflow pipe is provided with a perforated removable or hinged cover that will not restrict discharge under surcharge conditions; and

(iv) fixtures or appliances are not connected to the overflow pipe.

NOTE: Additional gullies may be installed—

(a) to receive the discharge from a domestic swimming pool;

(b) on installations that serve multiple residential buildings and which have separate yards provided for each occupancy;

(c) where a lower building may be affected by surcharge from a higher building;

(d) where a lower fixture in a building may be affected by surcharge from higher fixtures; or

(e) where such gullies need not ~~comply~~ conform with the requirements of Clause 4.6.6.6.

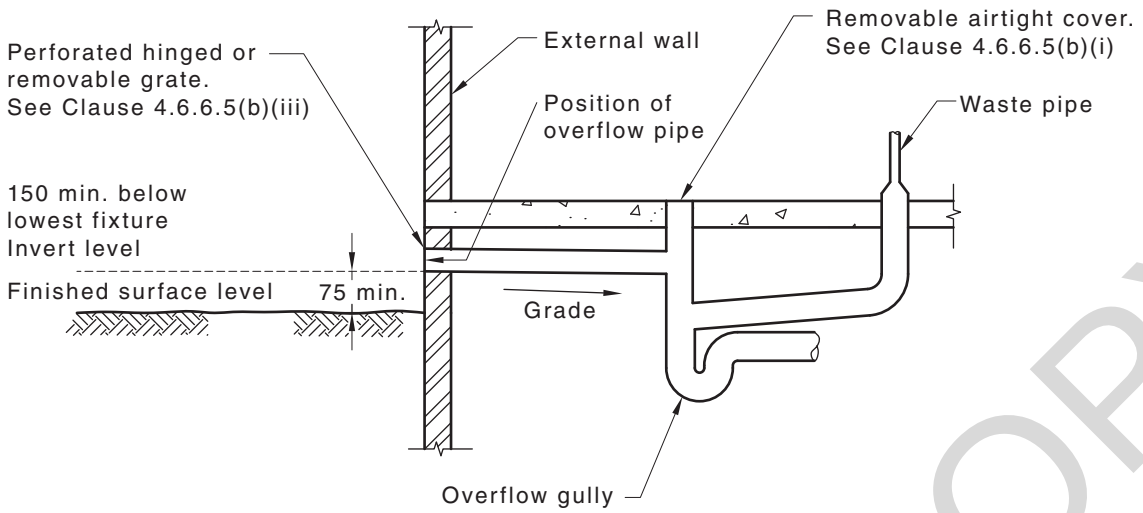

(a) Typical details of overflow relief gully inside building

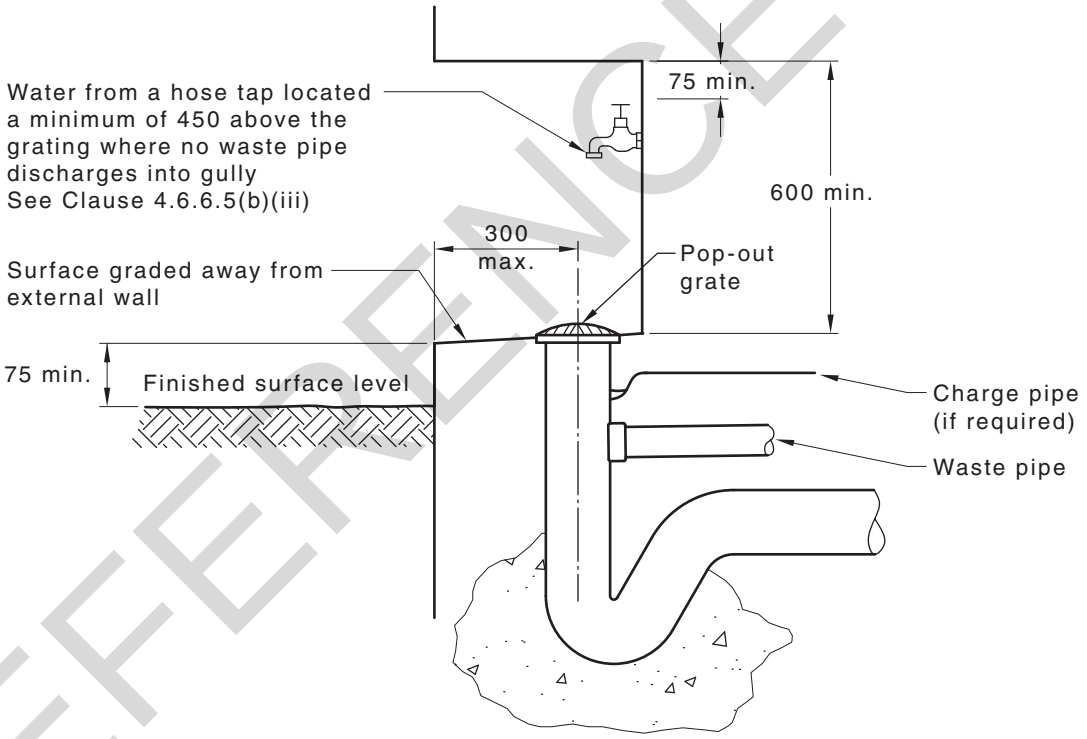

(b) Typical details of overflow relief gully positioned in recess

DIMENSIONS IN MILLIMETRES

FIGURE 4.6.6.5 POSITIONING OF OVERFLOW RELIEF GULLY

4.6.6.6 *Height of overflow point below lowest fixture*

A minimum height of 150 mm shall be maintained between the top of the overflow gully riser and the lowest fixture connected to the drain.

This height shall be measured vertically from the overflow level of the gully riser, or from the invert level of the overflow pipe, to the appropriate point given in Table 4.6.6.6.

TABLE 4.6.6.6

POINT OF MEASUREMENT ON FIXTURES FOR HEIGHT ABOVE OVERFLOW GULLY

Fixture	Point of measurement
Soil fixture with an integral trap	Top surface level of the water seal
Floor waste gully or shower	Top surface level of the grate
Soil fixture located in an outbuilding or room, the flow of which is graded to an external doorway	Overflow rim of the fixture
Other fixtures (includes greywater diversion devices)	Top surface level of the fixture outlet

~~NOTE: Floor waste gullies (including those in shower areas) that have a non-return valve fitted to prevent overflow may be excluded, provided the top of the gully connected to the drain terminates at least 50 mm below such floor waste gullies.~~

4.6.6.7 *Height above surrounding ground*

The minimum height between the top of the overflow gully riser, or the invert of the overflow pipe, and the finished surface level shall be 75 mm, except where the gully riser is located in a path or a paved area, where it shall be finished at a level so as to prevent the ponding and ingress of water.

4.6.6.8 *Height in flood-affected areas*

The top of the gully riser in flood-affected areas shall be—

(a) finished at a level not less than 150 mm above the declared flood level; or

(b) sealed with a removable watertight cover with a vent of the same size as the gully, terminating at a level not less than the declared flood level and in accordance with Clause 4.6.6.6.

Where either of the above requirements cannot be achieved, no sanitary drain shall gravitate to the network utility operator's sewer.

4.6.7 Floor waste gullies

4.6.7.1 *General*

For the purpose of Clause 4.6.7, a floor waste gully shall be deemed to be a fixture trap.

NOTE: For a typical connection of waste pipe to a floor waste gully, see Figure 4.6.7.1.

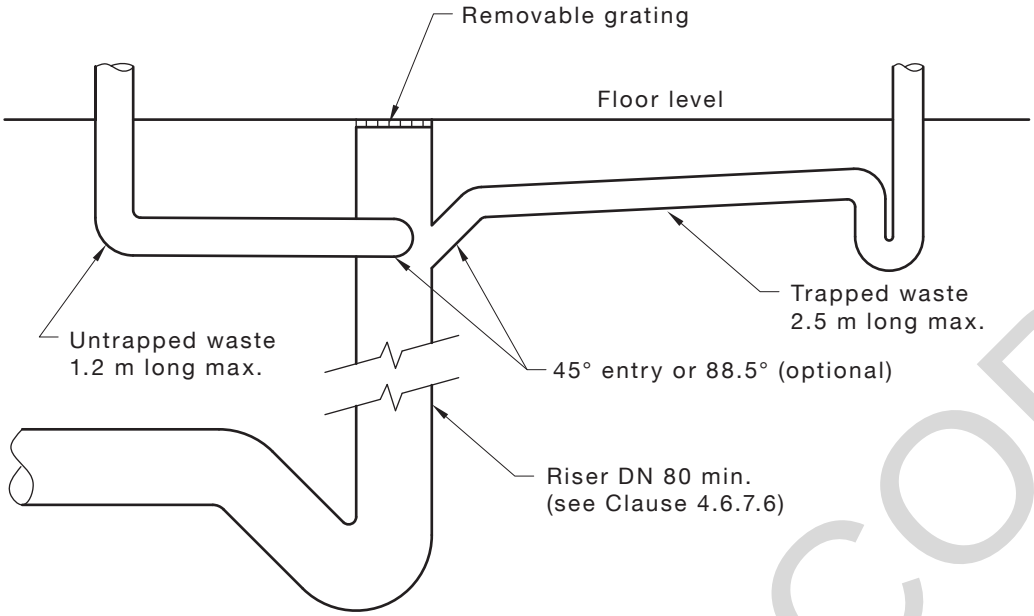

NOTE: See Table 4.6.7.7 for minimum riser heights.

FIGURE 4.6.7.1 TYPICAL CONNECTION OF WASTE PIPES TO A FLOOR WASTE GULLY

4.6.7.2 *Discharge to floor waste gullies*

Fixtures listed in Table 4.6.7.2, and fixture pairs in accordance with Clause 6.4.4, may be connected to floor waste gullies and, except for tundishes, shall be located within the same room as the gully.

Basins and drinking fountains that discharge to a floor waste gully shall have a trap installed immediately adjacent to the outlet of the fixture.

NOTE: Where it is known that the discharge may cause a foaming problem, fixtures should not be connected so as to discharge through a floor waste gully.

TABLE 4.6.7.2

DISCHARGE TO FLOOR WASTE GULLIES

Waste fixture	Maximum length of waste pipe~~,~~ m		
	Connected to riser of floor waste gully		Connected to submerged inlet floor waste gully (see Figure ~~4.6.7.2~~4.6.7.3)
	Fixture untrapped	Fixture trapped	Fixture trapped or untrapped
Bain-marie, sterilizer	1.2	2.5	Not allowed
Bar sink (commercial), glass-washing machine	1.2	2.5	Not allowed
Bar sink (domestic)	1.2	2.5	2.5
Basin, drinking fountain	Not permitted	2.5	2.5 (trapped only)
Bath, shower/bath	1.2	2.5	2.5
Bidet	1.2	2.5	Not applicable
Cleaners' sink	1.2	2.5	Not allowed
Clothes-washing machine	1.2	2.5	2.5
~~Bar sink (commercial), glass-washing machine~~	~~1.2~~	~~2.5~~	~~Not allowed~~
~~Bar sink (domestic)~~	~~1.2~~	~~2.5~~	~~2.5~~
~~Shower~~	~~1.2~~	~~2.5~~	~~2.5~~
~~Bain-marie, sterilizer~~	~~1.2~~	~~2.5~~	~~Not allowed~~
Laundry and ablution trough	1.2	2.5	2.5
Refrigerated cabinet	1.2	2.5	2.5
Shower	1.2	2.5	2.5
Tundish (see Clause 4.6.7.8)	10.0	10.0	10.0

NOTE: Floor waste gullies or similar traps directly connected to the drainage system and subjected to infrequent use shall be provided with an approved means of maintaining their water seals.

4.6.7.3 *Connection of fixtures*

Each fixture, or fixture pair that is connected to a floor waste gully shall be connected by a separate waste pipe at a grade of not less than 2.5% and with a length not exceeding that specified in Table 4.6.7.2.

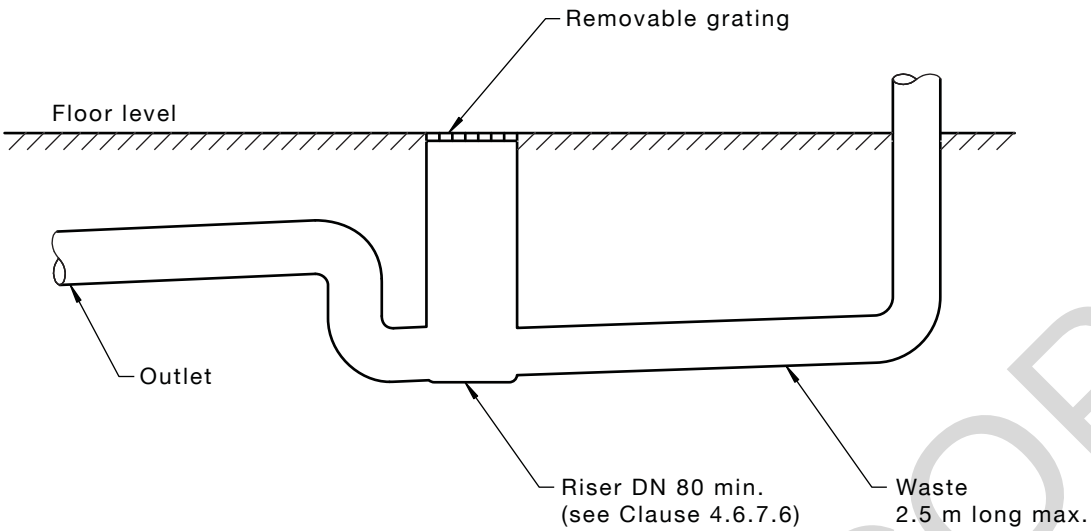

FIGURE ~~4.6.7.2~~ 4.6.7.3 SUBMERGED ENTRY FLOOR WASTE GULLY

4.6.7.4 *Waste pipes discharging to floor waste gullies (FWGs)*

Waste pipes discharging to FWGs shall not be extended and trap vents shall not be installed on fixture discharge pipes.

4.6.7.5 *Refrigerated coolrooms and air-conditioning return air plenums*

Floor waste gullies shall not be installed in any refrigerated coolroom, air-conditioning return air plenum or similar structure.

4.6.7.6 *Removable grate*

Floor waste gullies shall be installed with an accessible removable grate and have a riser of not less than DN 80 to finished surface level. Where the sole function of the floor waste gully is to dispose of water spillage and wash-down water, a minimum DN 50 riser may be used.

4.6.7.7 *Height of gully riser*

The height of the gully riser shall be measured from the top of the water seal to the floor surface level and shall ~~comply~~ conform with the following:

(a) For floor waste gullies with connections to the gully riser—

(i) the minimum height shall ~~comply~~ conform with Table 4.6.7.7; and

(ii) the maximum height shall be 600 mm.

(b) For floor waste gullies with submerged inlets, the minimum height shall be 100 mm.

NOTE: The maximum height maybe extended to 1 m when receiving the discharges from plant rooms located above ground floor level.

TABLE 4.6.7.7

MINIMUM HEIGHT OF FLOOR WASTE GULLY RISERS

Waste fixtures connected to gully riser	Size of gully riser	Minimum height, mm (water seal to floor level)	
	DN	88° entry	45° entry
All waste fixtures including maximum one bath	80 100	200 150	150 100

4.6.7.8 *Discharges from tundishes*

In addition to the discharges referred in Table 4.6.6.7, tundishes receiving discharges from water heater drains, air-conditioning units, other condensate lines, and the like, may discharge to a floor waste gully. The maximum length of the unvented discharge pipe shall not exceed 10 m.

NOTE: For a typical example, see Figure 4.6.7.8.

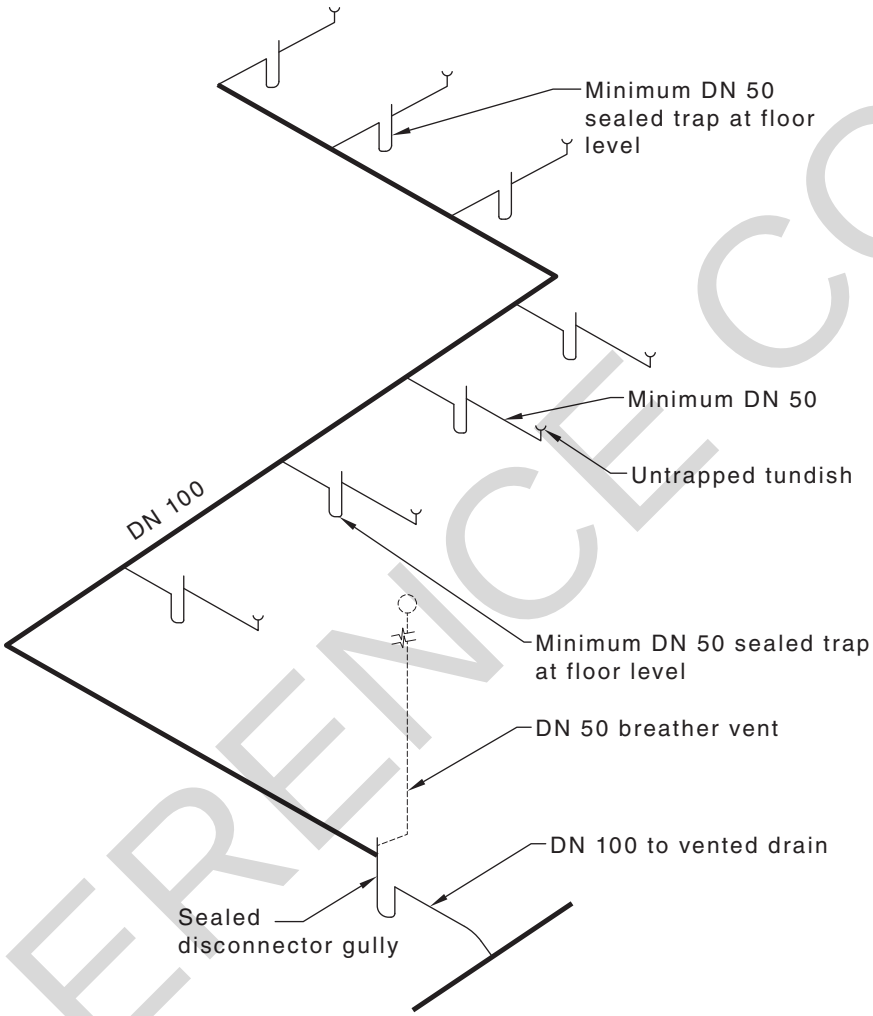

NOTES:

1 Maximum unvented length 10 m.

2 DN 50 open vent required if more than 10 m (not air admittance valve).

3 Sealed disconnector gully inside building installed in accordance with Clause 4.6.5.

4 DN 100 at minimum grade 1:100.

FIGURE 4.6.7.8 TYPICAL UNTRAPPED TUNDISH CONNECTION TO SEALED DISCONNECTOR GULLY VIA SEALED FLOOR WASTE GULLY

4.6.7.9 *Size of gully trap outlet*

The minimum size of floor waste gully outlets shall be as specified in Table 4.6.7.9. Where the sole function of the floor waste gully is to dispose of water spillage and wash-down water, a minimum DN 50 outlet may be used.

TABLE 4.6.7.9

FLOOR WASTE GULLY OUTLET SIZE

Maximum number of fixture units discharging into gully trap	Minimum nominal size of outlet DN
3	50
10 (including the discharge from not more than one bath)	65
15	80

NOTE: A shower outlet may be used as a floor waste gully.

4.6.7.10 *Connection of waste pipes*

Individual waste pipes shall connect—

(a) to a floor waste gully riser at an angle between 45° and 88°, as close as practicable above the water seal; or

(b) to a submerged inlet floor waste gully riser at an angle of 88°.

4.6.7.11 *Size of waste pipes from fixtures*

The size of waste pipes from fixtures connecting into floor waste gullies shall be as given in Table 6.2(A).

4.6.8 Charging floor waste gullies

4.6.8.1 *General*

Where a floor waste gully is located in a position that cannot receive a waste discharge, the water seal shall be maintained by one of the following means:

(a) A charge pipe from a flushing device connected at the heel or the base of the flush pipe with a union. The charge pipe shall enter the floor waste gully at 45°, not less than 50 mm above the water seal and shall be silver brazed or joined by a union to the riser as shown in Figure 4.6.8.1(b).

(b) A charge pipe from a tap set or a drain from a ~~hot~~ water heater relief valve, which shall drain over a tundish so that the air gap is maintained as shown in Figure 4.6.8.1(a).

(c) A charge pipe extended from a mechanical or electronic trap priming device to the floor waste gully within the same room or compartment as shown in Figure 4.6.8.1(c).

(d) Hose tap installed in the same room, if floor is graded to the floor waste gully.

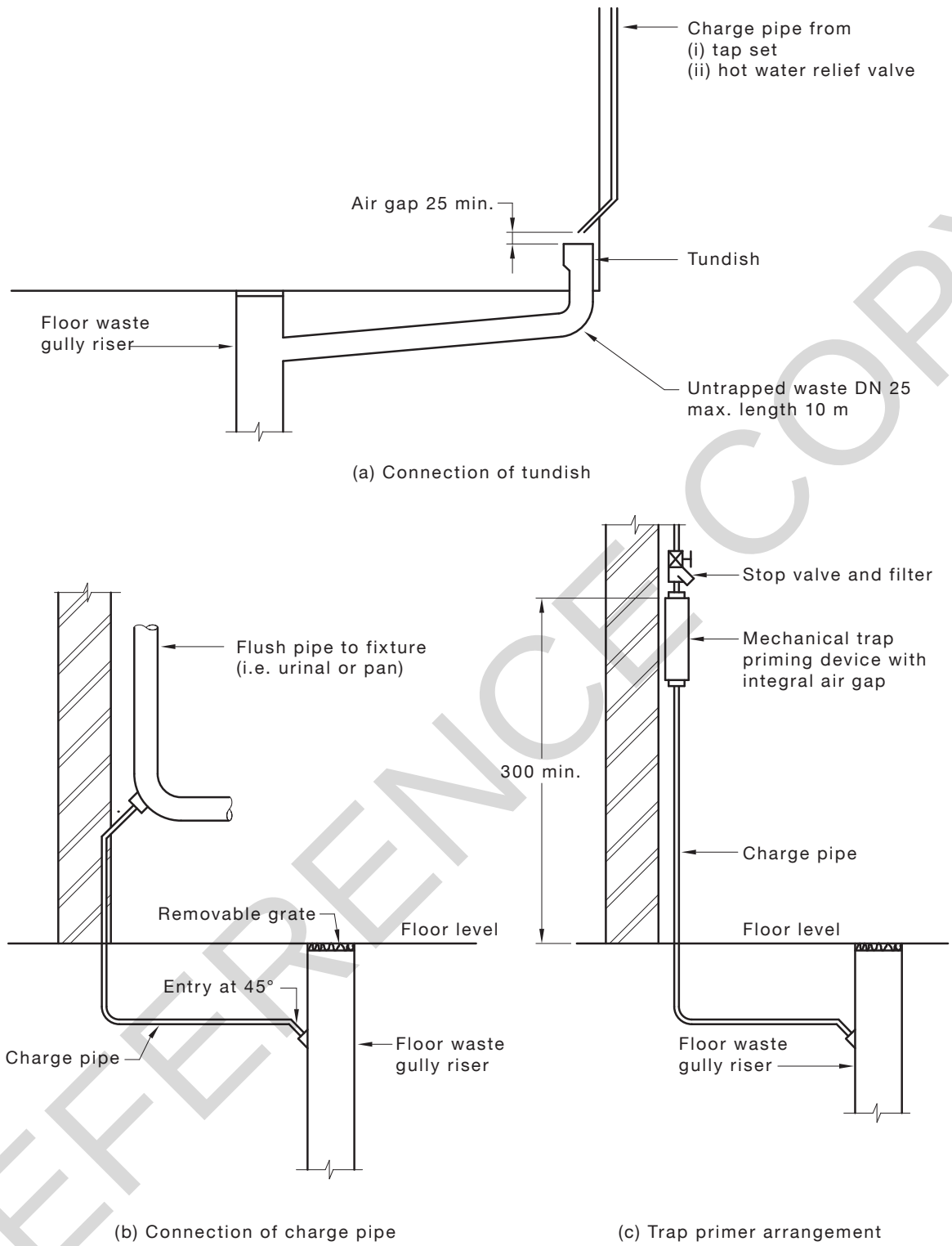

DIMENSIONS IN MILLIMETRES

FIGURE 4.6.8.1 CONNECTIONS OF CHARGE PIPES TO FLOOR WASTE GULLY

4.6.8.2 *Installation of charge pipes*

Charge pipes shall be in the size range of DN 6 to DN 15. Charge pipes from flushing devices, taps sets or ~~hot~~ water heater relief valve drains shall not exceed 10 m in length.

NOTE: The connection of a charge pipe to a floor waste gully riser should not restrict the bore of the riser or impede access for maintenance of the gully.

4.7 INSPECTION OPENINGS (IOs)

4.7.1 Location

Except where inspection chambers are provided, inspection openings for maintenance purposes shall be provided—

(a) outside of a building, not further than 2.5 m, along each branch drain connecting one or more water closets or slop hoppers;

(b) at intervals of not more than 30 m, with a minimum of one inspection opening on each main drain;

(c) at the connection to the network utility operator's sewer if not provided by the network utility operator;

(d) on the downstream end of the drain where any drain passes under a building except where waste fixtures only are concerned;

(e) where any new section of drain is connected to an existing drain;

(f) immediately at or upstream of the upper bend of a jump-up;

(g) at every change in horizontal direction of greater than 45° (~~NZ~~ New Zealand only); and

(h) at every change in gradient greater than 45°~~(NZ~~ (New Zealand only).

NOTE: For typical provision of inspection opening, see Figure 4.7.1.

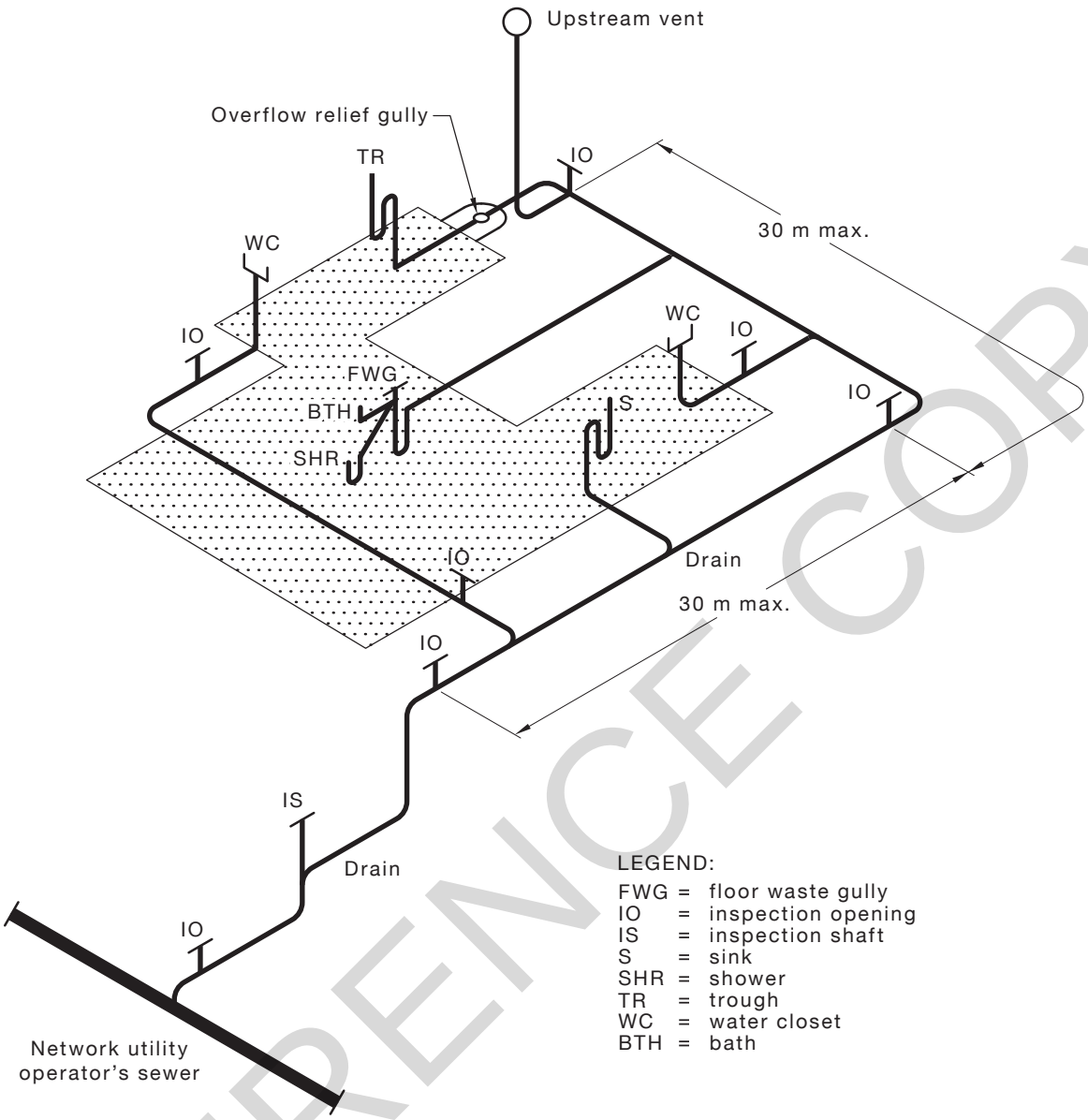

FIGURE 4.7.1 TYPICAL PROVISION OF INSPECTION OPENINGS

4.7.2 Size

The size of inspection openings in drains shall be—

(a) the same size as the drain for openings up to DN 150; or

(b) not less than DN 150 for openings larger than DN 150.

4.7.3 Types

Inspection openings may be of the following forms:

(a) Inspection branches or square junctions.

(b) Inspection chambers in accordance with Clause 4.8.

(c) Reflux valves.

4.7.4 Access to inspection openings

The following applies to inspection openings access:

(a) At least one inspection opening shall be raised to finished surface level on each main drain.

(b) Where raised to finished surface level, inspection openings shall be provided with airtight removable caps and protected by a cover and surrounded in such a manner that no traffic or structural loads can be transmitted to the drain.

4.7.5 Sealing

Inspection openings and unused sockets shall be sealed with plugs or caps fitted with a gasket or sealing ring and securely held in position by a clip or strap, or threaded connection.

When a plug or cap with a rubber ring or gasket is removed, a new rubber ring or gasket shall be fitted.

4.8 INSPECTION CHAMBERS

4.8.1 General

Inspection chambers shall be circular or rectangular in shape and either be—

(a) prefabricated; or

(b) constructed in situ from concrete at least 150 mm thick.

4.8.2 Size

The dimensions of inspection chambers shall ~~comply~~ conform with Table 4.8.2.

TABLE 4.8.2

SIZE OF INSPECTION CHAMBERS

Depth of floor of chamber		Rectangular		Circular
		Width	Length	Diameter
Minimum internal measurements in Australia, mm				
	<600	450	600	600
600	≤900	600	900	900
>900		750	1200	1050
Minimum internal measurements in New Zealand, mm				
100		<1000		450
>100		<1000		600
All sizes		>1000		1000

4.8.3 Construction

4.8.3.1 *Conduits and channels*

Conduits and channels in inspection chambers shall be constructed in accordance with the following:

(a) The conduit in any inspection chamber located inside a building shall be fully enclosed and incorporate an inspection opening or the inspection chamber shall be provided with an airtight cover.

(b) The conduit in any external inspection chamber may be either—

(i) enclosed, as specified in Item (a); or

(ii) an open channel of width and depth equal to the diameter of the drain.

(c) The floor in any inspection chamber shall slope towards the channel, or towards the inspection opening, on a grade of approximately 8%.

(d) Formed junctions and bends in channels shall have a centre-line radius of not less than 300 mm.

(e) A fall of at least 30 mm shall be provided in the invert of every channel that curves through 45° or more.

4.8.3.2 *Jump-ups*

Jump-ups at inspection chambers shall be as follows:

(a) Where installed in an inspection chamber, the jump-up shall be clipped to the wall and terminate at each end with a 90° bend, the higher one of which shall incorporate an inspection opening or may be a junction.

(b) Where more than one jump-up is installed in any circular inspection chamber, the chamber shall be at least 1.2 m in diameter.

NOTE: Typical jump-ups at inspection chambers are shown in Figure 4.8.3.2.

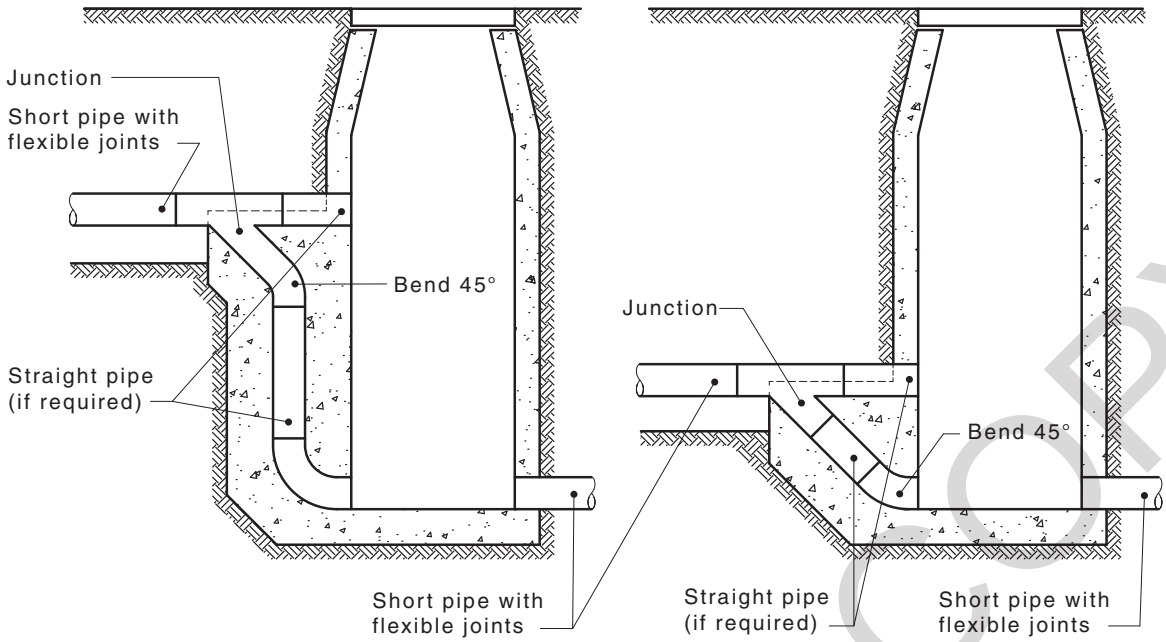

(a) Jump-up outside the chamber

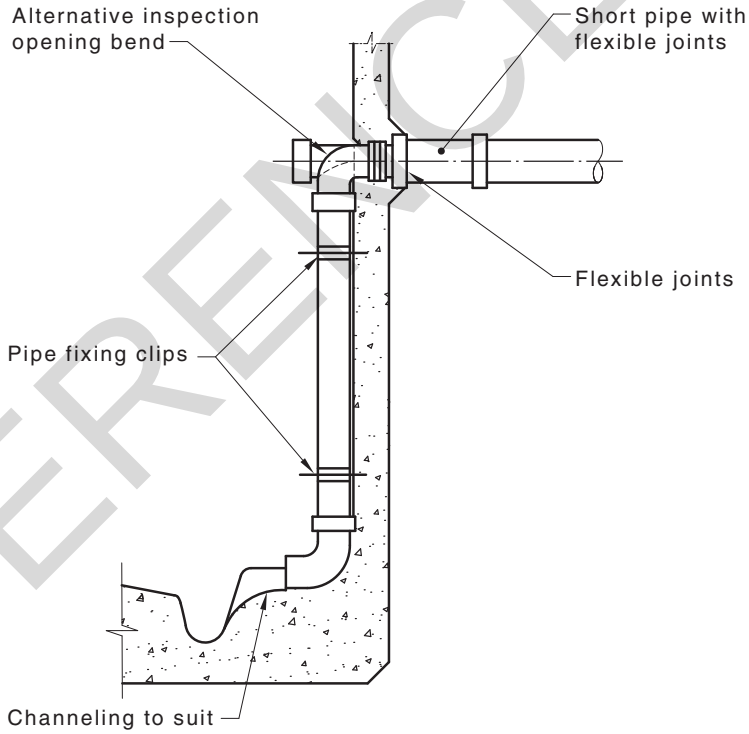

(b) Jump-up inside the chamber

FIGURE 4.8.3.2 TYPICAL JUMP-UPS AT INSPECTION CHAMBERS

4.8.3.3— *Ladders*

Where the depth of an inspection chamber, well or sump exceeds 1.2 m, rung-type and individual-rung ladders ~~complying~~ conforming with AS 1657 and AS/NZS 4680 shall be installed, provided—

(a) the individual-rung ladders are limited to inspection chambers with a maximum depth of 3.0 m and to structures without prefabricated walls; and

(b) following manufacture, steel ladders are hot-dip zinc galvanized as specified in AS/NZS 4680.

4.8.3.4 *Cement rendering*

The floor and cast in situ channels of all inspection chambers shall be rendered with a coat of cement mortar at least 10 mm thick and trowelled to a smooth finish.

4.8.3.5 *Top section*

Inspection chambers may be constructed either full size to surface level or, at a height of not less than 1.5 m above the floor, may be tapered to an access opening, provided the access shaft is at least 600 mm in diameter and does not exceed 350 mm in length.

4.8.3.6 *Access opening*

A circular or rectangular access opening or access chamber at least 500 mm in size and fitted with a removable watertight cover shall be provided at surface level.

Where subject to vehicular traffic, the cover shall be adequate for the applied loading.

4.8.3.7 *Construction joints*

Where required, construction joints shall be provided in accordance with the following:

(a) Not more than 24 h shall elapse between successive pours of concrete.

(b) The keying surface shall be scabbled and cleaned.

(c) A cement slurry or bonding agent shall be applied immediately prior to pouring concrete.

4.8.3.8 *Inserts*

Holes broken into, or formed in, walls of inspection chambers for insertion of pipes or fittings shall be made watertight by—

(a) keying and preparing as for construction joints, caulking the annular space between the concrete and pipe or fitting with a stiff 2:1 mix of sand-to-cement mortar; or

(b) sealing with an epoxy-based or other type of sealant.

4.8.4 Differential settlement

Where differential settlement may occur and a drain passes through the wall of an inspection chamber over 1 m deep, two flexible joints shall be provided on the drain adjacent to the wall. The length of drain between the two flexible joints shall not exceed 600 mm (see Figure 4.8.3.2).

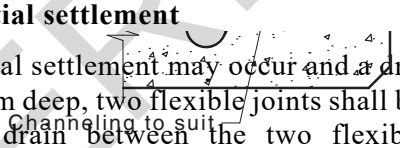

(b) Jump-up inside the chamber

4.8.5 Differential movement

Where a drain passes through the wall of an inspection chamber, septic tanks, pre-treatment devices, wet wells or similar structures, two flexible joints shall be installed with a spacing between the joints not exceeding 2.5 times the pipe diameter (see Figure 4.8.5).

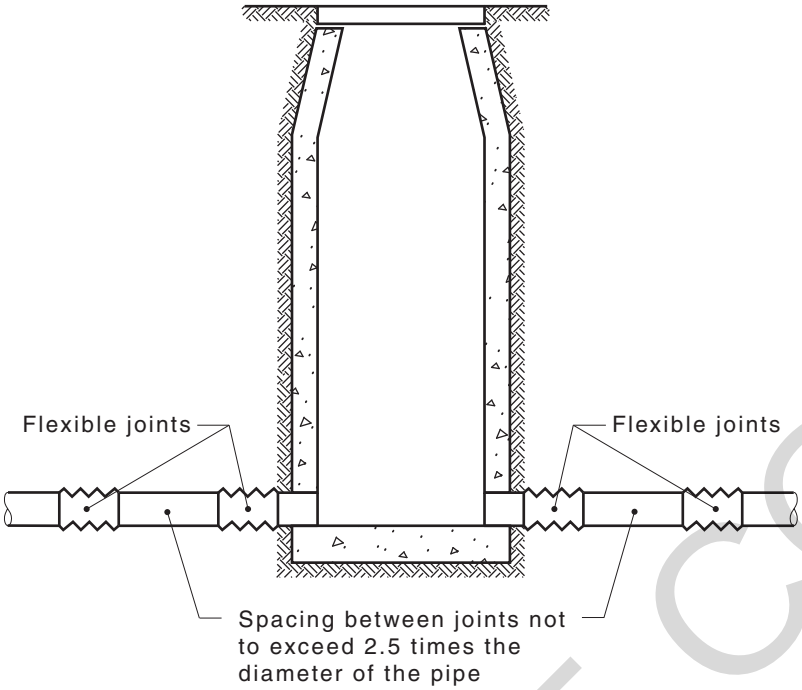

FIGURE ~~4.8.3.2~~ 4.8.5 TYPICAL ~~JUMP-UPS AT~~ INSTALLATION OF FLEXIBLE JOINTS INSTALLED IN INSPECTION CHAMBERS OR SIMILAR STRUCTURES

4.9 JUNCTIONS IN DRAINS

~~4.9.1 General~~

4.9.1 Drains installed at grade

The connection of any drain to a graded drain shall be by means of a junction with an upstream angle not greater than 45° and shall comply with the following:

(a) Double 45° junctions shall not be used.

(b) Where a junction is used to make the connection of a branch drain to a main drain of the same size, the entry level of the branch drain may be on grade.

(c) Where unequal junctions are used, the invert of the branch drain shall be at least 10 mm higher than the soffit of the drain to which it connects.

NOTES:

1 For a typical arrangement of drains joined at grade, see Figure 4.9.1.

2 For junctions installed in drains for Class H1, H2 and E sites, see Clause 3.2.

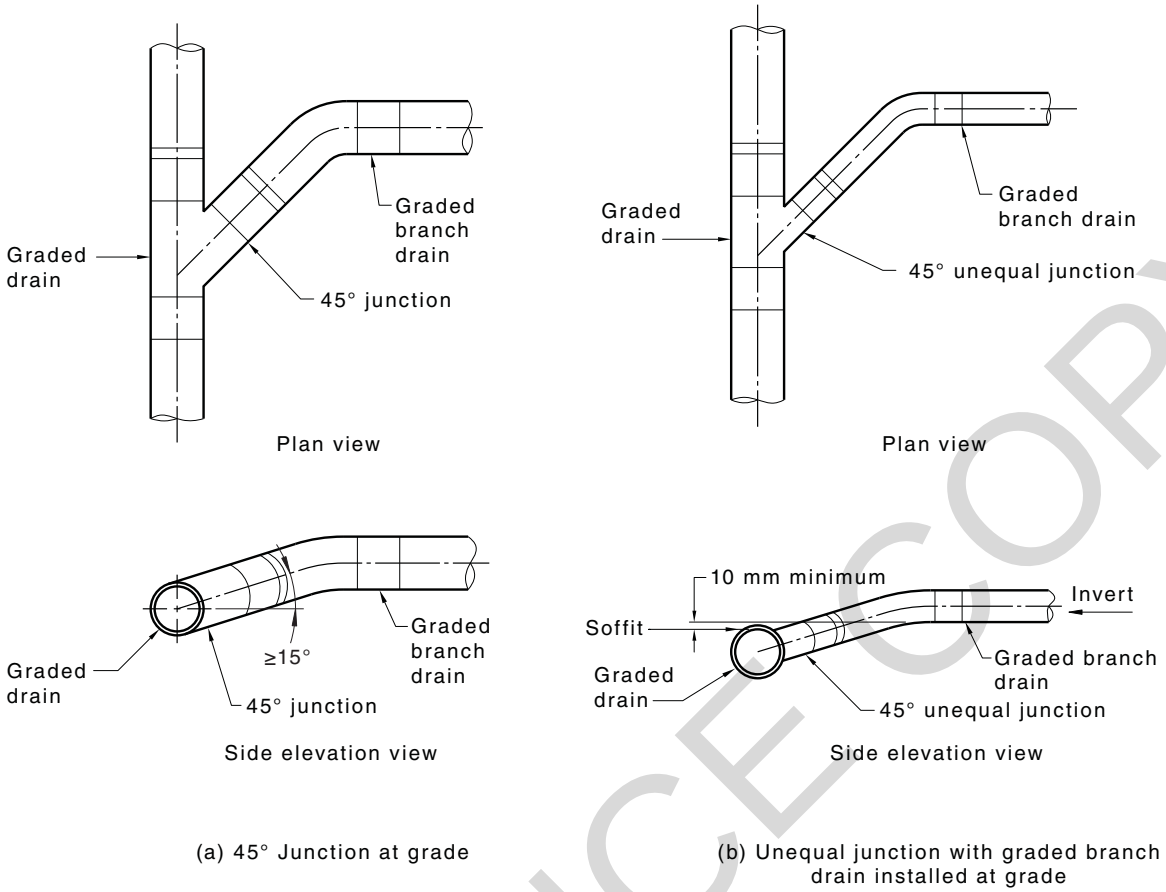

FIGURE 4.9.1 TYPICAL ARRANGEMENT FOR GRADED BRANCH DRAINS ENTERING MAIN DRAIN

4.9.2~~4.9.3~~ ~~Clause deleted~~Junctions installed in vertical plane

Junctions installed in a vertical plane shall not be used for connection of stacks. Junctions installed in the vertical plane for the connection of a single discharge pipe or a drain, shall have an upstream angle not greater than 45°, provided the following criteria are met, where applicable:

~~(a) Text deleted.~~

(a) The vertical riser does not exceed 2 m in height, above the invert of the graded drain.

(b) Where the length of the branch drain connected to the vertical riser exceeds 500 mm, the branch drain is independently supported.

(c) Where a vertical riser is to be extended to finished surface level and/or the distance between the invert of the main drain and the invert of the branch drain exceeds 1 m, the junction is supported in accordance with Clause 5.3.

4.9.3 Square junctions

Square junctions in drains shall be used only—

(a) at the top of a jump-up at the point of connection;

(b) at the connection of an inspection shaft to a graded drain;

(c) at the connection of a drain to a boundary trap riser;

(d) where a vent is connected to a boundary trap riser;

(e) as the inlet riser of a gully or floor waste gully;

(f) as an inspection opening; and

(g) at the top of a jump-up in a drain, in lieu of a bend and inspection opening.

4.9.4 Junctions for stacks connected to below-ground drainage

A 45° junction installed on grade and a bend at the base of the stack, as specified in Clause 6.7.3, shall be used for the connection of a stack to a below-ground drain.

4.10 JUMP-UPS

Jump-ups in drains shall be constructed in accordance with the following:

(a) The bend at the base of the vertical section of drain shall be supported in accordance with Clause 5.3.

(b) A bend, 45° junction, square junction or a sweep junction shall be used at the top of the vertical section of drain.

NOTE: A typical example is shown in Figure 4.10.

(c) The vertical section shall be protected and supported during the installation and placement of backfilling.

Branch drains connected to jump-ups shall be independently supported where the unsupported length exceeds 500 mm.

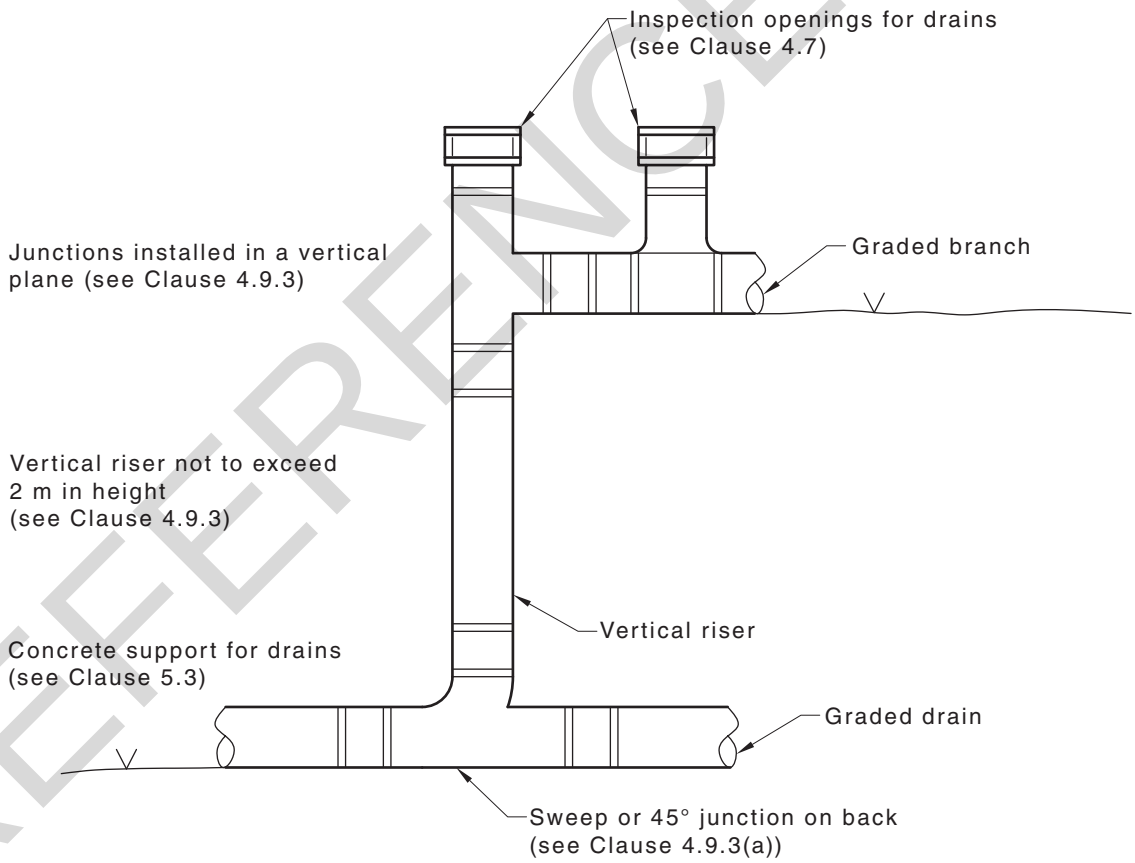

FIGURE 4.10 TYPICAL VERTICAL JUMP-UP FROM MAIN DRAIN TO GRADED BRANCHES

4.11 DISCONNECTION AND SEALING

4.11.1 Disconnection from the sewer

Disused drains shall be disconnected in accordance with the following:

(a) Disconnection shall be made at the point of connection to the network utility operator's sewer.

(b) Extraneous water, soil, sand, rock or other substances shall not enter the sewer.

(c) Where the point of connection is in water-charged ground, dewatering shall be carried out in accordance with Clause 5.2.3.

4.11.2 Sealing

Disused drains shall be disconnected as near as practicable to the drains remaining in service, which shall be made watertight using a cap or plug and sealed in a manner appropriate for the material remaining in use.

SECTION 5 EXCAVATION BEDDING SUPPORT AND BACKFILLING

5.1 SCOPE OF SECTION

This Section specifies requirements for excavation, bedding, support and backfilling of drains. It covers pipes up to DN 225 (see also Clause 3.8).

NOTES:

1 Excavation should be conducted in accordance with workplace health and safety legislation.

2 Where the bottom of the trench is adjacent to or below the footing and walls of any adjoining building or structure, see also Clause 3.8.2.

5.2 EXCAVATION OF TRENCHES

5.2.1 Trench dimensions

Trenches shall be made with a minimum clearance of 100 mm on each side of the drain barrel, measured to the inside of the sheeting or side of trench.

5.2.2 Over-excavation

Where a trench has been excavated deeper than necessary, the excess depth shall be filled either with bedding material compacted to achieve a density as near to the original soil density as possible, or with concrete.

5.2.3 Water-charged ground

Excavation in water-charged ground shall be in accordance with the following:

(a) The water level shall be lowered below the base of the proposed trench and maintained at that level during excavation, laying of the drain and backfilling of the trench.

(b) Dewatering shall be carried out in accordance with the following:

(i) The removed water shall be discharged into a location where it will not cause a nuisance or damage to property or the environment.

(ii) The removed water shall not discharge, either directly or indirectly, into the sewer.

NOTE: Pumps and spearheads or similar devices may be used.

5.3 CONCRETE SUPPORT FOR DRAINS

Concrete pads used to support drains shall be a minimum of 100 mm thick and shall be laid—

(a) under gully traps and boundary traps of material other than cast iron;

(b) under all inspection junctions where a riser is brought to the surface;

(c) under all bends greater than DN 65 forming risers from the main drain;

(d) not closer than 20 mm to flexible joints;

(e) for square junctions, beneath the junction to a minimum thickness of 100 mm and continued up vertically to the centre of the junction fitting; and

(f) for 45° junctions, beneath the junction to a minimum thickness of 100 mm and continued up vertically to the underside of the bend fitted to the junction fitting.

5.4 BEDDING OF DRAINS

5.4.1 General

The bed onto which drains are laid shall continuously support the installed drain accommodating the loads from the pipeline and surrounding ground. Bedding of drains shall ~~comply~~ conform with the following:

(a) In stable soil, drains shall be laid on a bedding material ~~complying~~ conforming with Clause 5.4.2, or shall be directly supported on the undisturbed base of the trench, provided the base of the trench is free from any rocks or tree roots.

(b) In clay, rock, shale, gravel or ground containing hard objects, drains shall be supported on a bedding material placed in the base of the trench.

(c) Groundwater or surface water entering the trench shall not disturb the bedding materials.

5.4.2 Bedding materials

Filling materials used for bedding of drains shall be one of the following:

(a) Crushed rock, gravel screenings or similar recycled materials of nominal size of 7–10 mm.

(b) Cement mortar containing 1 part of Portland cement to 4 parts of sand by volume, thoroughly mixed with clean water to a workable consistency.

(c) Cement mortar bedding where the base of the trench is rock or shale. Where the grade is greater than 20% (1 in 5), the cement mortar shall be—

  (i) of a minimum depth of 50 mm, measured below the barrel of the pipe;

  (ii) not less than 75 mm wide;

  (iii) not closer than 20 mm to flexible joints; and

  (iv) have pipes supported at not greater than 1500 mm from the centres, prior to placing the mortar bedding.

(d) Free-running sand capable of passing through a 2 mm mesh sieve, which does not contain clay, organic or any other deleterious materials.

NOTES:

1 Cast iron and ductile iron pipes may be unsupported for up to 600 mm either side of each pipe joint.

2 For installation of PVC-U pipe systems ~~see~~, refer to AS/NZS 2032.~~For installation of polyethylene pipe systems, see AS/NZS 2033.~~

3 For installation of polyethylene pipe systems, refer to AS/NZS 2033.

5.4.3 Pipe side support and overlay materials

Pipe side support and pipe overlay material shall not be inferior to the pipe bedding material.

5.4.4 Bedding and backfill

The sanitary drainage services shall be surrounded with not less than 75 mm of compacted sand, or fine-grained soil, with no hard-edged object to come in contact with or rest against any pipe or fitting.

NOTE: For typical example, see Figure 5.4.4

Backfill shall be free from builder's waste, bricks, concrete pieces, rocks or hard matter larger than 25 mm and no soil lumps larger than 75 mm.

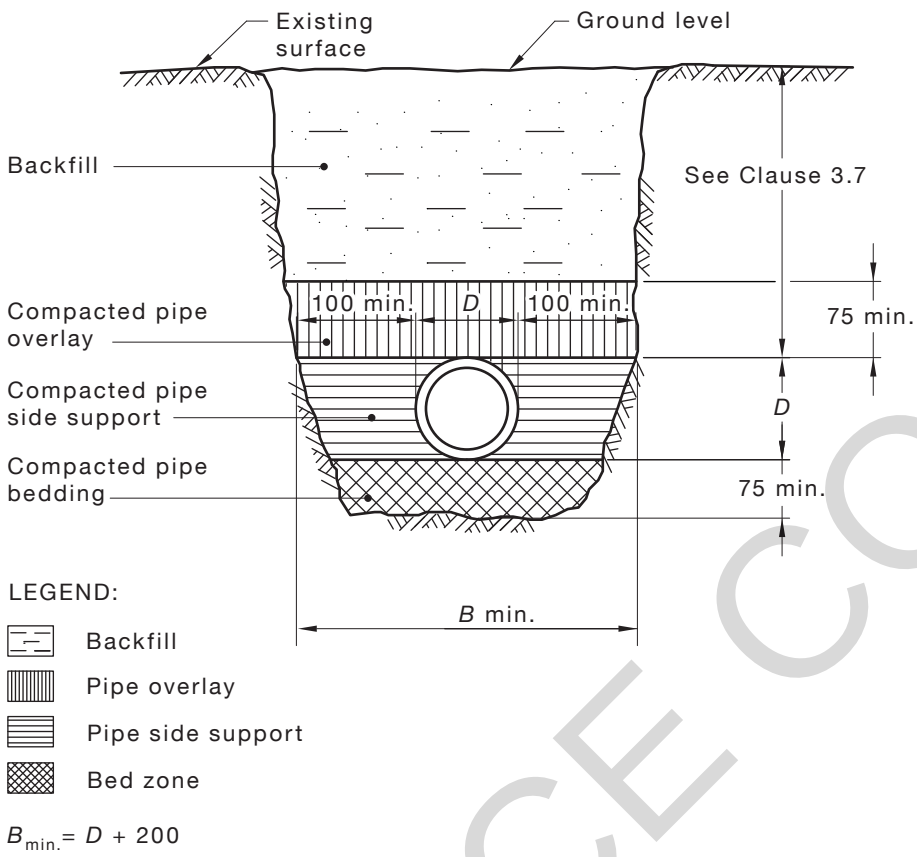

DIMENSIONS IN MILLIMETRES

FIGURE 5.4.4 TYPICAL BEDDING OF DRAINS

5.4.5 Minimum cover

The minimum cover requirements for drain shall be in accordance with Clause 3.7.

5.5 INSTALLATION OF BACKFILL MATERIALS

5.5.1 General

Backfill materials shall be compacted to restore the trench as near as practicable to the normal surrounding ground surface level and reduce the likelihood of subsidence.

NOTE: For minimum cover, see Clause 3.7.

5.5.2 Excavated material

Excavated material from the trench may be suitable for final backfill, provided it is free from rock, hard matter and organic material, and broken up so that it contains no soil lumps larger than 75 mm, which would prevent adequate compaction.

~~5.6 DRAINS IN OTHER THAN STABLE GROUND~~

~~Where drains are to be laid in filled, unstable or water-charged ground, methods of support and bedding shall be designed to withstand and suit the ground conditions.~~

~~NOTES:~~

~~1 AS 2870 provides special design considerations for drains associated with residential slab or footing systems on moderately, highly or extremely reactive sites.~~

5.6 PLUMBING AND DRAINAGE IN REACTIVE SOILS

5.6.1 General

This Clause specifies the installation of plumbing and drainage in M, H1, H2, and E site classifications. This base of trenches shall be sloped away from the building in accordance with Clause 3.2.2(a). Where pipes pass under footing systems, there shall be a barrier to prevent the ingress of water in accordance with Clause 3.2.2(b)(ii).

NOTES:

1 Site classifications are defined in AS 2870.

2 Clause 3.8.2 provides special design considerations for drains in close proximity to footings.

3 For proclaimed mine subsidence or landslip districts~~–~~, the appropriate authority should be referred to for advice ~~of~~ on subsidence or landslip design parameters for proposed drainage systems.

~~4 In Australia, acceptable evidence that a design may be deemed suitable is provided for in the Plumbing Code of Australia.~~

4 ~~5~~In New Zealand~~–~~, refer to NZBC Clause G13/AS2 and ~~NZS~~ NSZ 4404 Land ~~development~~ Development and subdivision infrastructure (wastewater) for seismic design of pipes in seismically active areas.

5.6.2 Vertical risers

For sites classified as H1, H2, and E external branches with vertical risers connected to a junction shall be provided with flexible joints where—

(a) the downstream side of the bend or junction forming the branch drain is connected to the main drain; and

(b) immediately either side of the junction forming part of the main drain; or

(c) immediately downstream of the bend on the main drain.

NOTE: For a typical connection of flexible joints connected to vertical risers, see Figure 5.6.2.

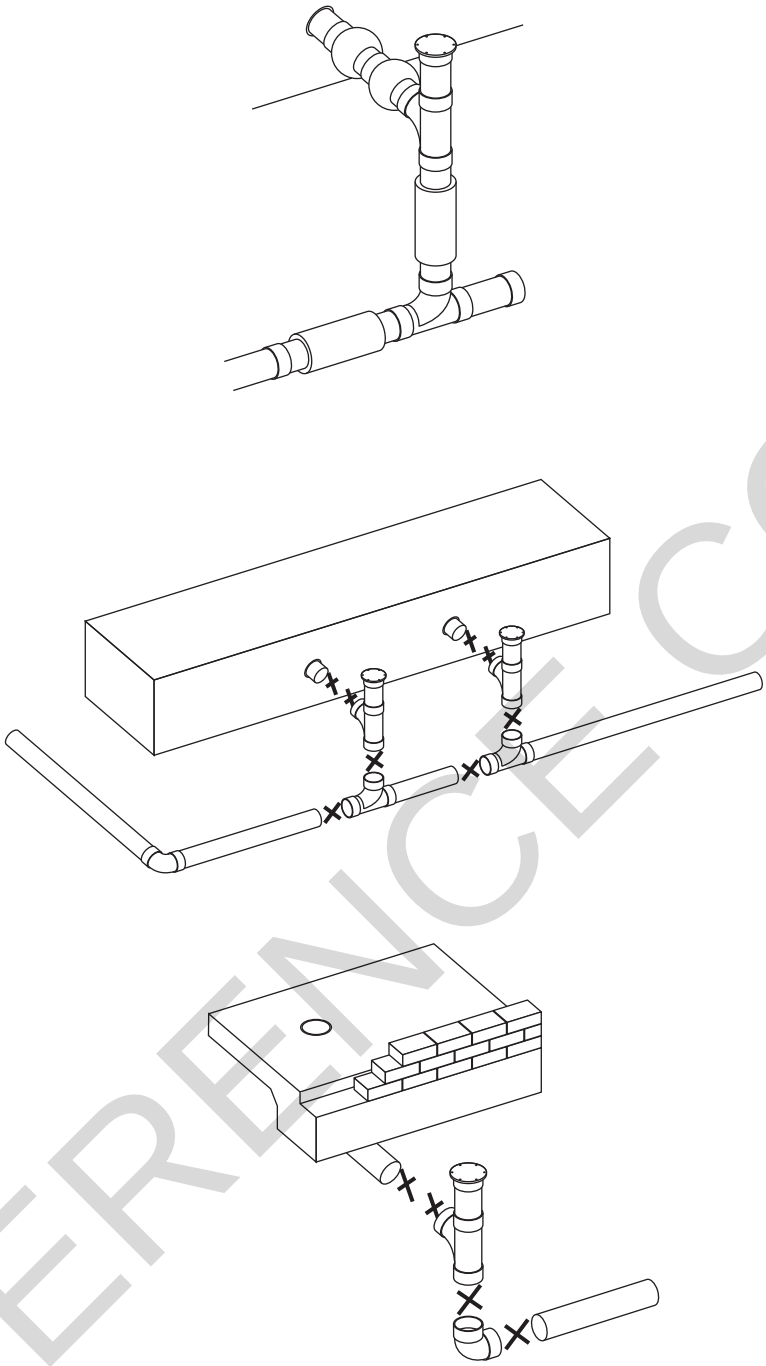

FIGURE 5.6.2 TYPICAL VERTICAL RISERS

5.6.3 Graded risers

For sites classified as H1, H2, and E external branches with graded risers connected to a junction shall be provided with flexible joints where:

(a) the downstream side of the first bend outside the footing on the branch drain and immediately upstream from the inlet to the junction forms part of the main drain; and

(b) immediately either side of the junction forming part of the main drain; or

(c) immediately downstream of the bend on the main drain.

NOTE: Figure 5.6.3 shows a typical connection of flexible joints connected to graded risers.

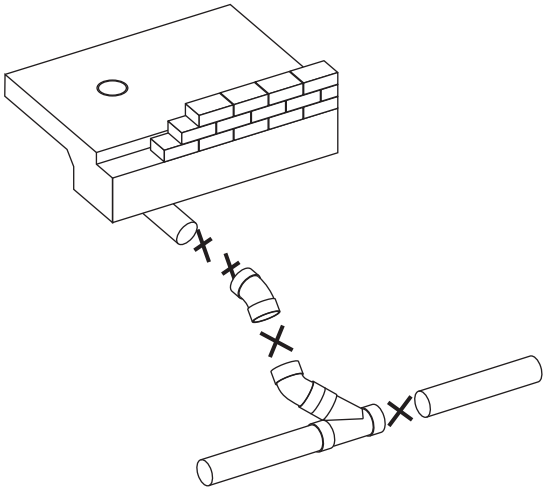

FIGURE 5.6.3 TYPICAL EXAMPLE OF GRADED RISERS

SECTION 6 — GENERAL DESIGN REQUIREMENTS FOR SANITARY PLUMBING SYSTEMS

6.1 SCOPE OF SECTION

This Section specifies requirements for all types of sanitary plumbing systems.

NOTES:

1 ~~NOTE:~~The number of floor levels is specified in Clause 9.2.5.

2 Vacuum drainage systems are covered in Section 16.

6.2 FIXTURE UNIT RATINGS

Fixture unit ratings for all fixtures are given in Table 6.2(A). These ratings shall be used for the sizing of drains, stacks and graded discharge pipes.

~~6.3 VENTING FOR FIXTURES~~

~~Except for fixtures discharging to disconnector gullies (in which case Table 4.6.3 applies) and where the length of the fixture discharge pipe exceeds the length shown in Appendix C, a trap vent or air admittance valve shall be provided.~~

TABLE 6.2(A)

FIXTURE UNIT RATINGS

Fixture	Fixture abbreviations	Min. size of trap outlet and fixture discharge pipe DN		Fixture unit rating
			NZ (only)	
Autopsy table	AT	50		3
Bain-marie	BM	40		1
Basin	B	40	32	1
Bath (with or without shower) (Note 1)	Bath	40		4
Bath (foot)	Bath (foot)	~~4~~40		3
Bath (baby)	Bath (baby)	40		3
Bath (shower)	Bath (shr)	40		4
Bedpan sterilizer	BPS	50		4
Bedpan washer	BPW	80		6 (F. valve) 4 (Cist.)
Bedpan washer	BPW	100		6 (F. valve) 4 (Cist.)
Bedpan washer/sterilizer	BPWS	80		6 (F. valve) 4 (Cist.)
Bedpan washer/sterilizer	BPWS	100		6 (F. valve) 4 (Cist.)
Bidet, bidette	Bid	40	32	1
Circular wash fountain	CWF	50		4

(*continued*)

Fixture	Fixture abbreviations	Min. size of trap outlet and fixture discharge pipe DN		Fixture unit rating
			NZ (only)	
Clothes-washing machine— domestic commercial	CWM	 40 50		 5 See Table 6.2(B)
Dental unit	DU	40		1
Dishwashing machine— domestic commercial	DWM	 40 50		 3 See Table 6.2(B)
Drinking fountain	DF	40	25	1
Floor waste gully— without fixture with fixture	~~FW~~ FWG	 50		 0 as per fixture rating
Glass-washing machine	GWM	40		3
Potato peeler	PP	50		3
Sanitary napkin disposal unit	SNDU	40		3
Shower— single multiple	Shr	 40 50		 2 2 per shower head
Sink— single (with or without disposal unit) (Note 4) double (with or without disposal unit) tea bar, domestic bar, commercial	 S S T BS(D) BS(C)	 50 50 50 40 50	 40 40 40	 3 3 1 1 3
Sink cleaner	CS	50	40	1

TABLE 6.2(A) *(continue*

Sink laboratory (Note 4)	LS	50		1
Sink (pot or utility)	PS	50		5
Slop hopper	SH	100		6 (F. valve) 4 (Cist.)
Trough— ablution laundry (single or double)	 Tr.(A) Tr.(L)	 40 40		 3 5
Urinal— wall-hung (including waterless) stall, or each 600 mm length of slab	 Ur	 40 50	 32	 1 1
Water closet pan	WC	80		6 (F. valve) ~~2~~ 4 (Cist.)
Water closet pan	WC	100		6 (F. valve) 4 (Cist.)

Fixture	Fixture abbreviations	Min. size of trap outlet and fixture discharge pipe DN		Fixture unit rating
			NZ (only)	
Bathroom group in a single room (basin, bath, shower, water closet)				6
				(*continued*)
Combination pan room sink and flushing bowl	PRS	80		6 (F. valve) 4 (Cist.)
TABLE 6.2(A) (*continued*)				
Combination pan room sink	PRS	100		6 (F. valve) 4 (Cist.)

NOTES:

1 The maximum discharge from any fixture into the single-stack and single-stack modified system is 500 L. If the discharge is in excess of 500 L, the fixture unit loading may be determined in accordance with Table 6.2(B).

2 Where a dishwashing machine is connected to a sink trap, only the sink fixture unit rating is considered. Where a clothes-washing machine is connected to a trough trap, only the trough fixture unit rating is considered.

3 Where waste fixtures are connected to a floor waste gully, the fixture unit rating of the floor waste gully is the sum of the fixture unit ratings of the fixtures connected.

4 To meet the requirements of AS 1428 (series), accessible design sinks on height adjustable working surfaces in kitchens and laboratories may have DN 40 fixture discharge pipes.

TABLE 6.2(B)

FIXTURE UNIT RATINGS FOR CONTINUOUS FLOWS

Flow, L/s	0.5	1.0	1.5	2.0	2.5	3.0	3.5	4.0
Fixture unit equivalent rating	6	8	15	25	40	60	85	115

6.3 VENTING FOR FIXTURES

Except for fixtures discharging to disconnector gullies (in which case Table 4.6.3 applies) and where the length of the fixture discharge pipe exceeds the length shown in Appendix B, a trap vent or air admittance valve shall be provided.

6.4 TRAPPING OF FIXTURES AND APPLIANCES

6.4.1 General

Each sanitary fixture and appliance shall have a trap or self-sealing device. The trap or self-sealing device shall be in the same room as the fixture and/or appliance that it serves and be accessible.

6.4.2 Water seal

Under normal operating conditions, fixture traps shall retain a water seal of not less than 25 mm.

Traps that are installed in a pressurized chamber shall retain a water seal of not less than 70 mm when the maximum pressure within the chamber is applied.

6.4.3 Location of traps and self-sealing devices

Traps and self-sealing devices shall be connected as close as practicable to the outlet of the fixture or appliance being served. The maximum distance from the outlet of a fixture to the surface of the water seal of a trap shall be 600 mm for other fixtures other than floor waste gullies and fixture pairs.

NOTES:

1 ~~NOTE:~~For floor waste gullies, see Clause 4.6.7.7~~ and for fixture pairs, see Clause 6.4.4.2.~~.

2 For fixture pairs, see Clause 6.4.4.2.

6.4.4 Multiple outlets

6.4.4.1 *General*

The following fixtures, or a combination thereof, may be connected in pairs to a single fixture trap, provided the fixtures have similar spill levels:

(a) Basins.

(b) Sinks (other than pot, laboratory or utility sinks).

(c) Showers.

(d) Laundry troughs.

(e) Ablution troughs.

6.4.4.2 *Distance between outlets*

Pairs of fixtures shall be connected so that the distance between their outlets does not exceed 1.2 m.

NOTE: A typical connection of a fixture pair is shown in Figure 6.4.4.2.

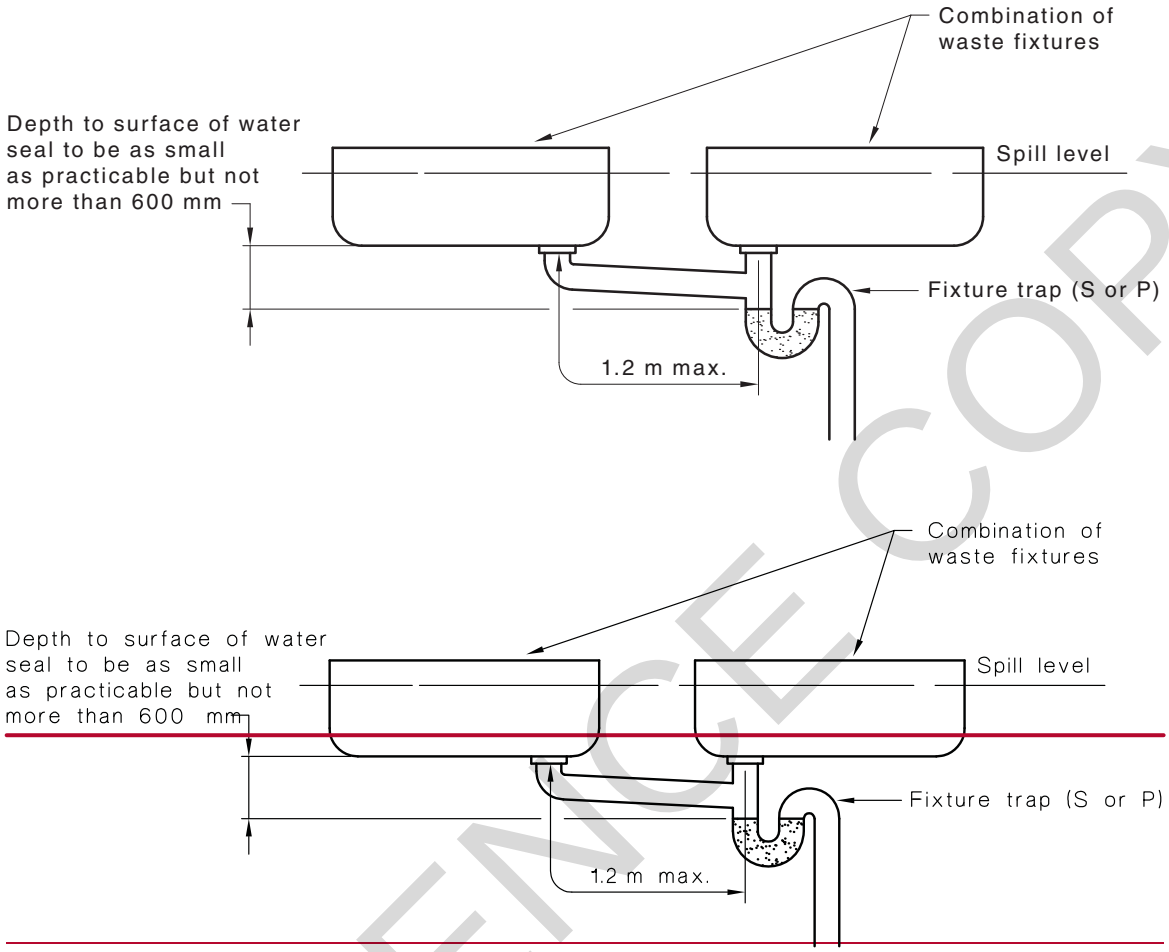

FIGURE 6.4.4.2 TYPICAL CONNECTION OF A FIXTURE PAIR

6.5 GRADED DISCHARGE PIPES

6.5.1 Minimum grades

The minimum grades of discharge pipes shall ~~comply~~ conform with Table 6.5.1.

TABLE 6.5.1

MINIMUM GRADES OF DISCHARGE PIPES

Size of graded section of pipe DN	Minimum grade %
40	2.50
50	2.50
65	2.50
80	1.65
100	1.65
125	1.25
150	1.00
225	0.65
300	0.40

NOTE: Appendix D provides a table for conversion of grades as a percentage to grades as a ratio.

6.5.2 Connection methods

6.5.2.1 *General*

Connection of graded pipes to each other or connection of fixture discharge pipes to graded pipes shall ~~comply~~ conform with the following:

(a) Graded discharge pipes of different sizes shall be connected so that the soffits of both pipes are in common alignment.

(b) The invert level of a trap or floor waste gully weir shall be a minimum of 10 mm higher than the soffit of the graded discharge pipe to which it connects.

NOTE: A typical connection is depicted in Figure 6.5.2.1.

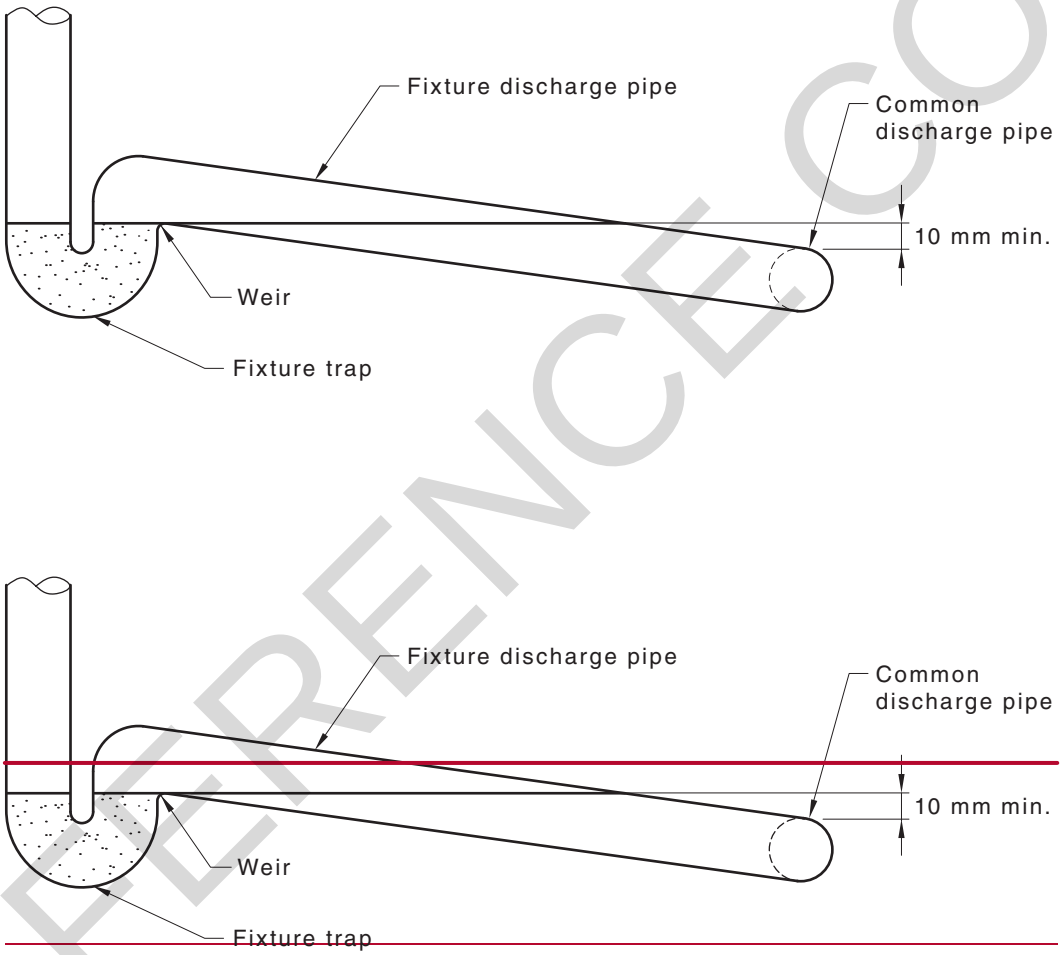

FIGURE 6.5.2.1 TYPICAL CONNECTION OF FIXTURE DISCHARGE PIPE TO A COMMON DISCHARGE PIPE

6.5.2.2 *Opposed discharges*

Opposed discharge pipes shall be connected to ~~comply~~ conform with Clause 6.5.2.1(b), using—

(a) two separate junction fittings; or

(b) junction branches fabricated so that the opposed junction entries do not overlap.

6.5.2.3 *Junctions in graded pipes*

Junctions (whether equal or unequal) shall be 45°.

Double 45° junctions or double sweep junctions shall not be used to make connections on grade.

6.5.2.4 *Junctions installed at grade*

Discharge pipes shall be joined to each other by means of a 45° junction and shall comply with the following:

(a) Where a junction is used to make the connection of a branch drain to a main drain of the same size, the entry level of the branch drain may be on grade.

(b) Where unequal size junctions are used, the invert of the branch pipe shall be 10 mm higher than the soffit of the pipe to which it connects.

~~**6.5.2.5** *Clause deleted*~~

6.5.2.5— *Junctions installed in a vertical plane*

5° junctions shall be installed in the vertical plane for the connection of a single discharge pipe and common discharge pipe.

6.5.2.6 *Junctions for stacks connected to a graded pipe*

Junctions installed on grade for the connection of a stack to a graded pipe shall be in accordance with Clause 6.7.3.

6.6 JUNCTIONS IN STACKS

6.6.1 Types

The following types of junctions may be used to connect fixture, branch or common discharge pipes to a stack:

(a) 45° junctions.

(b) Sweep junctions.

(c) Aerator junctions.

(d) Ball junctions.

(e) Square junctions.

No fixture shall be connected to the branch or common discharge pipe within 500 mm in length from the stack if the entry is at grade.

6.6.2 Restrictions for square and ball junctions

Where any fixture trap is connected to a ball junction, the weir of the fixture trap shall be at the same height or above the top of the branch junction fitting.

Where a square or ball junction is used and any discharge pipe is less than 500 mm in length from the stack, one of the following shall apply:

(a) A self-sealing device shall be fitted to the fixture.

(b) An S-trap shall be fitted to the fixture and a vertical dropper provided in the discharge pipe between the fixture and the stack junction.

(c) A P-trap shall be fitted to the fixture, and the discharge pipe graded at not less than 6.65% (1 in 15).

6.6.3 Opposed connections

6.6.3.1 *At the same level*

Opposed connections at ball junctions or aerator junction fittings may be used only where the opposing pipes are connected to equal numbers of the same type of fixtures.

Opposed connections, other than at ball type junctions or aerator junction fittings, shall only be made using double 45° junctions or double sweep junctions.

6.6.3.2 *At different levels*

Graded fixture or common discharge pipes that are located at a lower level than any other opposed similar pipes shall not be connected to a stack within a restricted entry zone, as given in Table 6.6.3.2 and Figure 6.6.3.2, unless the lower pipe enters the stack at an angle of 45°.

TABLE 6.6.3.2

RESTRICTED ENTRY ZONE REQUIREMENTS

Discharge pipe size DN	Stack size DN	Restricted entry zone vertical depth, mm
>40 ≤65	>40 ≤80	90
>40 ≤65	100	110
>40 ≤65	125	210
>40 ≤65	150	250
≥80	≥80	200

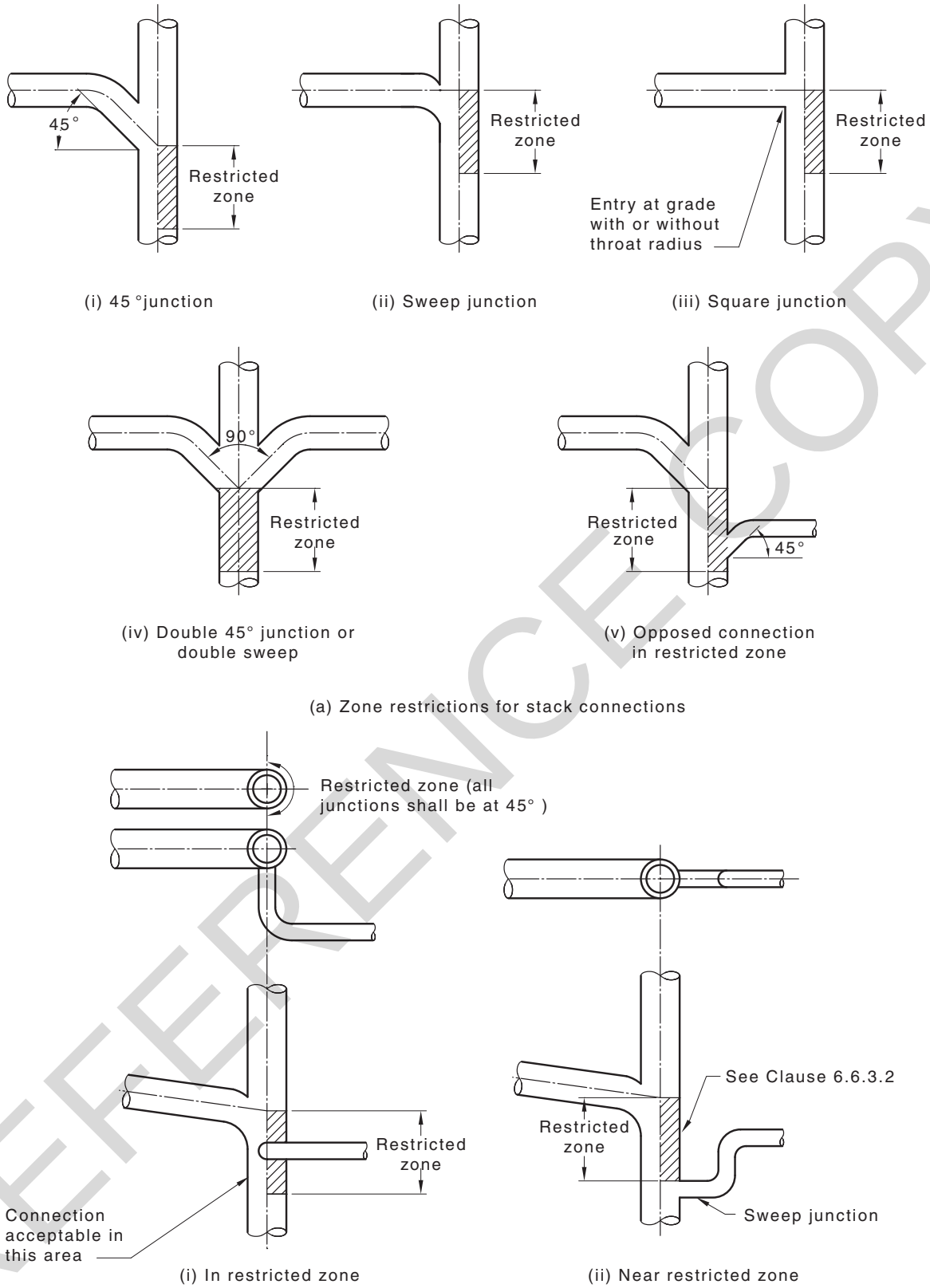

FIGURE 6.6.3.2 CONNECTIONS TO STACKS

6.7 CONNECTIONS NEAR BASE OF STACKS

6.7.1 Connections to drains or graded pipes

Discharge pipes shall connect to a drain or a graded pipe in accordance with Figure 6.7.1 and the following:

(a) For stacks of three floor levels or more—

(i) no connection shall be made closer than 2.5 m downstream or 1 m upstream of the base of the stack; and

(ii) no discharge pipe connecting a fixture upstream of a junction that connects a stack to a drain or graded pipe shall be closer than 1 m from the base of the stack.

(b) For stacks of two floor levels or less—

(i) no connection shall be made closer than 500 mm downstream or upstream of the base of the stack; and

(ii) no discharge pipe connecting a fixture upstream of a junction that connects a stack to a drain or graded pipe shall be within 500 mm of the base of the stack.

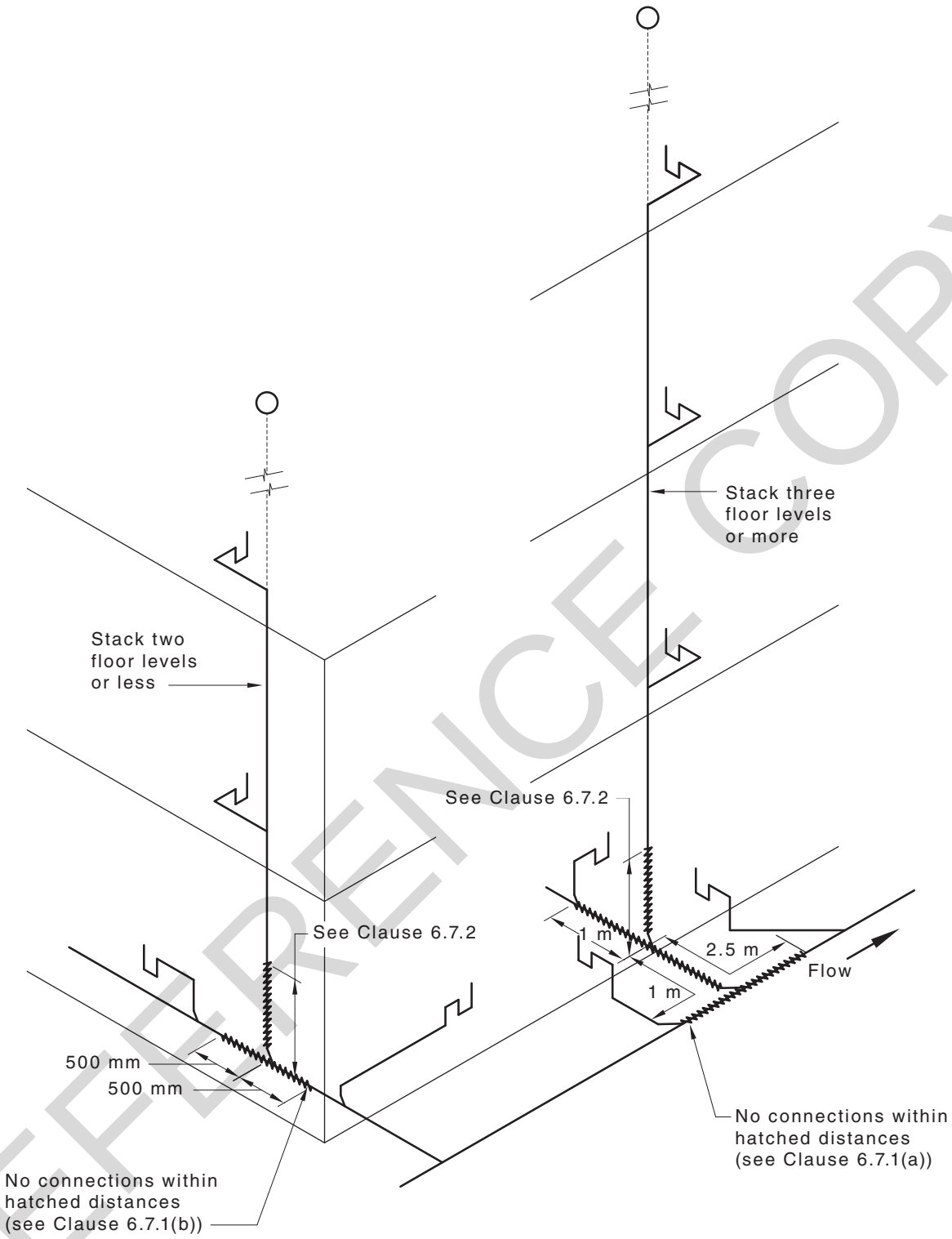

FIGURE 6.7.1 CONNECTIONS AT OR NEAR BASE OF STACK

6.7.2 Connections above base of stack

Branches shall not connect to a stack, as shown in Figure 6.7.1, within the following distances, measured vertically from the base of the stack to the invert of the branch:

(a) 600 mm for stacks that extend not more than five floor levels above the base of the stack.

(b) 1 m for stacks that extend more than five floor levels above the base of the stack.

(c) 2.5 m for all stacks in areas where foaming is likely to occur.

6.7.3 Connection of stacks to graded pipes or drains above ground

Connection of stacks to graded pipes or drains above the ground shall be made by—

(a) a 45° junction installed on grade and a bend at the base of the stack in accordance with Clause 6.7.4; or

(b) a 45° junction installed in the vertical plane with an extended branch so that the vertical projection of the stack, on the graded pipe or drain above the ground, is wholly outside the junction area, as shown in Figure 6.7.3.(b).

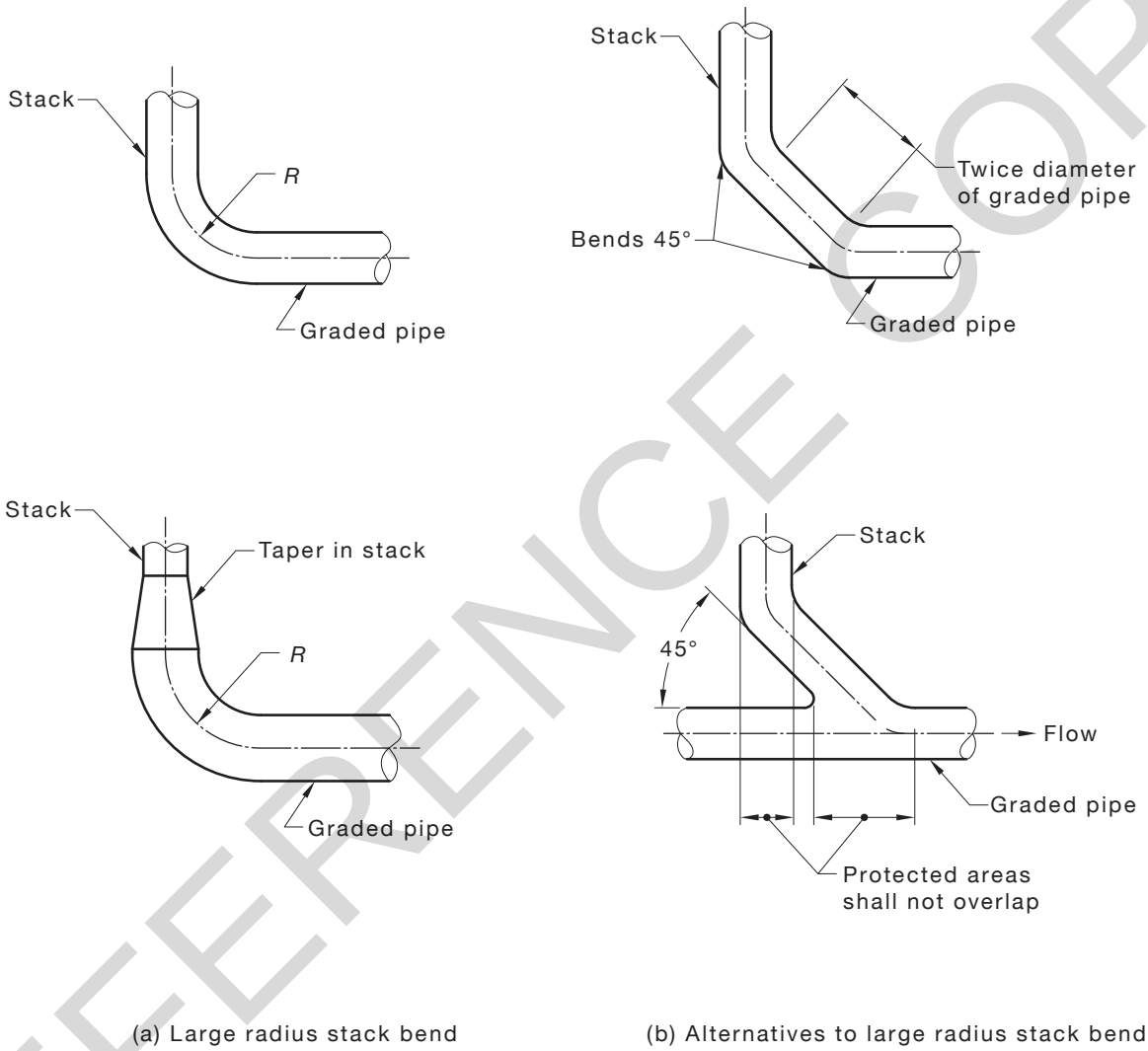

FIGURE 6.7.3 CONNECTION OF DISCHARGE STACKS TO GRADED DISCHARGE PIPES

6.7.4 Bends at the base of stacks

Bends at the base of stacks shall be not smaller in size than the graded pipe or drain to which they connect. They shall—

(a) have a centre-line radius not less than that stated in Table 6.7.4;

(b) consist of two 45° bends separated by a straight pipe of length not less than twice the bore of the pipe; or

(c) consist of an 88° bend where a stack extends through no more than two floor levels.

Where a stack is smaller than the graded pipe, a taper fitting shall be installed in the vertical stack, as shown in Figure 6.7.3.

TABLE 6.7.4

MINIMUM RADIUS FOR BENDS AT THE BASE OF STACKS

Pipe size DN	Radius (R) mm
≤100	225
>100	300

6.8 VENTS

6.8.1 General

This Clause (6.8) applies to the ventilation of the sanitary plumbing and sanitary drainage system using vent pipes.

NOTE: For venting with air admittance valves, see Clause 6.9.

6.8.2 Minimum grade

Vents shall be installed at a minimum grade of 1.25% (1 in 80) so that any condensation or other liquids that form in or enter the vent will drain to the sanitary plumbing and sanitary drainage system.

6.8.3 Interconnections

Vents shall only be interconnected above the flood level rim of the highest fixture or floor waste gully served by the vent.

The following vent pipes shall be vented to the open air outside the building independently and not be interconnected to any other system vent:

(a) Vent pipes connected to waste fixtures discharging into disconnector gullies.

(b) Chamber or steam relief vents from bedpan sanitizers and washers.

(c) Vent pipes from arrestor chambers.

(d) Vent pipes from gullies located within buildings.

6.8.4 Termination

Vents shall terminate as shown in Figure 6.8.4 in the open air outside the building and in a location not less than—

(a) 600 mm above any opening into any building that is within a horizontal distance of 3 m from the vent;

(b) 150 mm above its point of penetration through any roof covering;

(c) 3 m above any trafficable roof deck that is within a horizontal distance of 3 m from the vent;

(d) 2 m above or 600 mm below any chimney or similar opening within a horizontal distance of 3 m from the vent;

(e) 5 m in any direction from any air duct intake; or

(f) 600 mm above any eaves, coping or parapet that is within a horizontal distance of 600 mm from the vent.

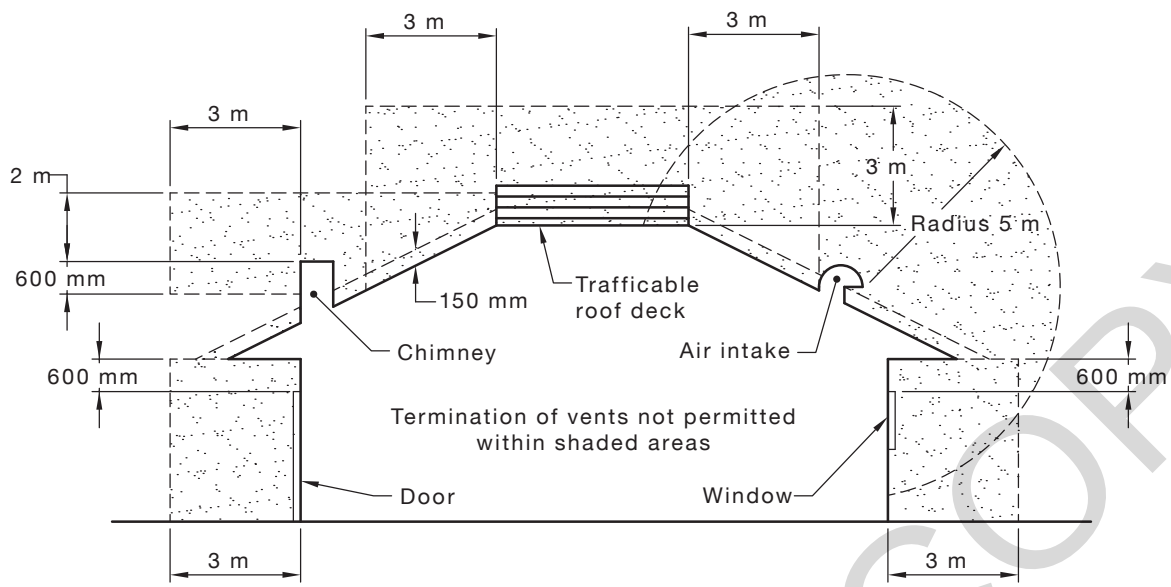

NOTE: Trafficable decks exclude access workways and work platforms.

FIGURE 6.8.4 TERMINATION OF VENTS

6.8.5 Connection to graded pipes

Where a vent is connected to a graded section of a discharge pipe, it shall be connected downstream of a fixture or trap and shall ~~comply~~ conform with Clause 8.5.1.1.

NOTE: For a typical connection of a vent to graded pipes, see Figure 6.8.5.

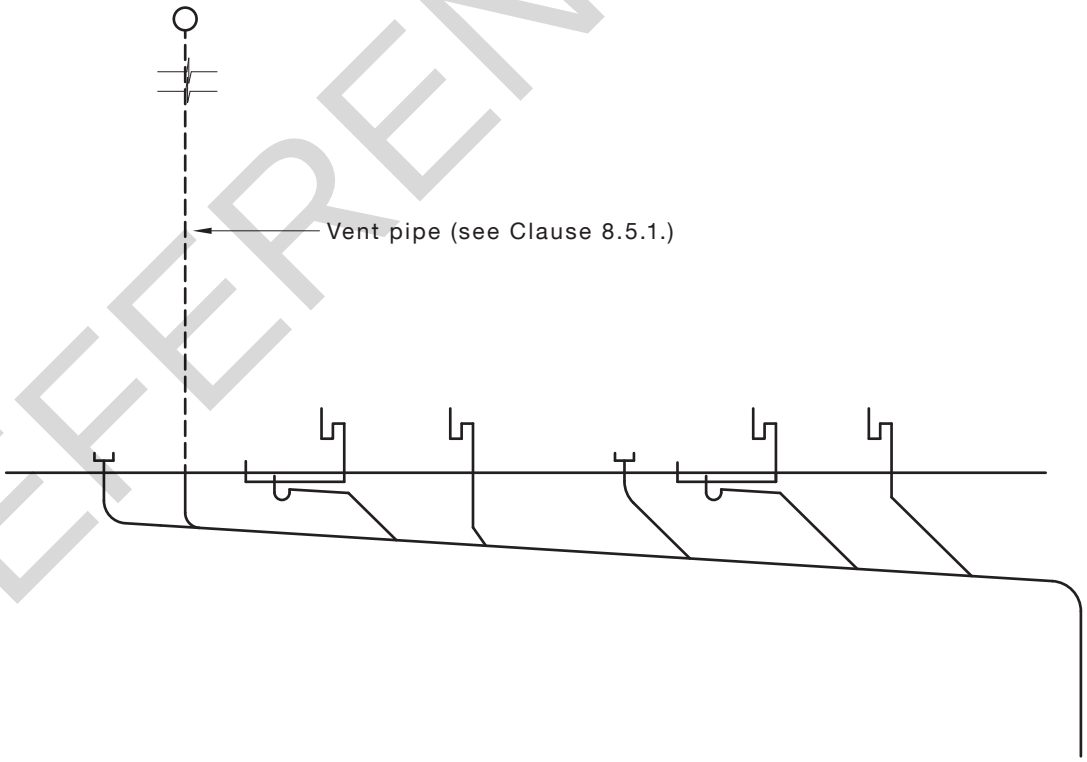

FIGURE 6.8.5 VENT CONNECTED TO GRADED PIPES

6.9 AIR ADMITTANCE VALVES

6.9.1 Air admittance valves

Air admittance valves ~~complying~~ conforming with AS/NZS 4936 may be used in sanitary plumbing systems for trap vents, group vents and stack vents and to ventilate branch drains. They shall not be used for the upstream venting of a main drain.

NOTE: Branches connected into a positive pressure area, such as near boundary traps in multistorey buildings, may need additional venting.

6.9.2 Requirements for use

The following requirements for air admittance valves apply:

(a) Air admittance valves shall be used only on systems that have at least one open upstream vent off the main drain. The upstream vent shall be sized in accordance with Table 3.9.3.1 and shall be not less than DN 50.

(b) Where the sanitary drains from three or more buildings on an allotment discharge to the sewerage system, the sanitary drainage system of each building shall have at least one open upstream vent connected to its sanitary drain.

(c) Air admittance valves shall have a determined airflow capacity not less than that specified in Table 6.9.2(A) when used as a trap vent, group vent or branch drain upstream vent, and Table 6.9.2(B) when used as a stack vent.

(d) An air admittance valve shall not be used as a stack vent where the stack extends through 10 or more floor levels.

(e) Where a sanitary plumbing system has a relief vent fitted to the stack, the relief vent shall be extended separately to atmosphere as an open vent.

(f) In Australia, air admittance valves that form an integral part of a fixture trap shall only be used as a trap vent.

TABLE 6.9.2(A)

MINIMUM DETERMINED AIRFLOW CAPACITY OF AIR ADMITTANCE VALVES WHEN USED AS A TRAP VENT, GROUP VENT OR BRANCH DRAIN VENT

Fixture unit loading of discharge pipe	Minimum airflow capacity of AAV~~,~~ L/s
6	~~12~~1.9
9	2.3
10	2.4
12	2.7
18	3.3
24	3.8
30	4.2
36	4.6
42	5.0
48	5.3
54	5.7
60	6.0

NOTE: Further values may be interpolated or extrapolated using ~~the following equation~~Equation 6.9.2(A), on which this Table is based:

For discharge pipes—

$$Q = 2 \sqrt{(FU/6.75)} \quad \ldots 6.9.2(A)$$

where

~~where Q is the~~ Q = determined airflow capacity of the valve in litres per second~~, and FU is the fixture unit loading.~~

FU = fixture unit loading

TABLE 6.9.2(B)

MINIMUM DETERMINED AIRFLOW CAPACITY OF AIR ADMITTANCE VALVES VENTING DISCHARGE STACKS

Fixture unit loading of discharge stack	Minimum determined airflow capacity of AAV~~,~~ L/s
1	3
2	4
4	6
6	7
10	9
12	10
15	11
20	13
25	15
30	16
40	18
60	23
80	26
100	29
200	41
300	51
400	58
500	65
600	72
1000	92

NOTE: Further values may be interpolated or extrapolated using ~~the following equation~~Equation 6.9.2(B), on which this Table is based:

For discharge stacks—

$$Q = 8 \sqrt{(FU/6.75)} \qquad \ldots 6.9.2(B)$$

where

~~where Q is the~~ Q = determined airflow capacity of the valve in litres per second~~, and FU is the fixture unit loading.~~

FU = is the fixture unit loading

6.9.3 Location

Air admittance valves shall be—

(a) accessible for service, repair or replacement;

(b) located to allow adequate air to enter the valve;

(c) provided with ventilation openings when located in a wall space; and

(d) not installed where air is contaminated with solvents.

6.9.4 Installation

Air admittance valves shall be—

(a) connected to a graded fixture or combined fixture/discharge pipe ~~complying~~ conforming with Clause 8.5.1.1.

Traps with integral air admittance valves need not ~~comply~~ conform with the limitation to be at least 75 mm downstream of the trap as specified in Clause 8.5.1.1 nor with the requirement to have 100 mm air cushion as detailed in Figure 6.9.4;

(b) installed upright within 5° of the vertical as shown in Figure 6.9.4;

(c) installed in areas where the ambient temperature or water discharge does not vary below 0°C or above 60°C;

(d) installed not more than 1000 mm below the flood level of the fixture to which it is connected;

(e) protected from insect entry;

(f) protected from ultra-violet rays if installed outdoors; and

(g) protected from mechanical damage.

NOTES:

1 In addition to the open vents, air admittance valves, installed in accordance with Clause 6.9, may be used to provide additional venting of drains connected to a vacuum sewerage system collection bank.

2 Additional UV protection is not required where the UV protection is provided by the inherent properties of the materials of the valve body.

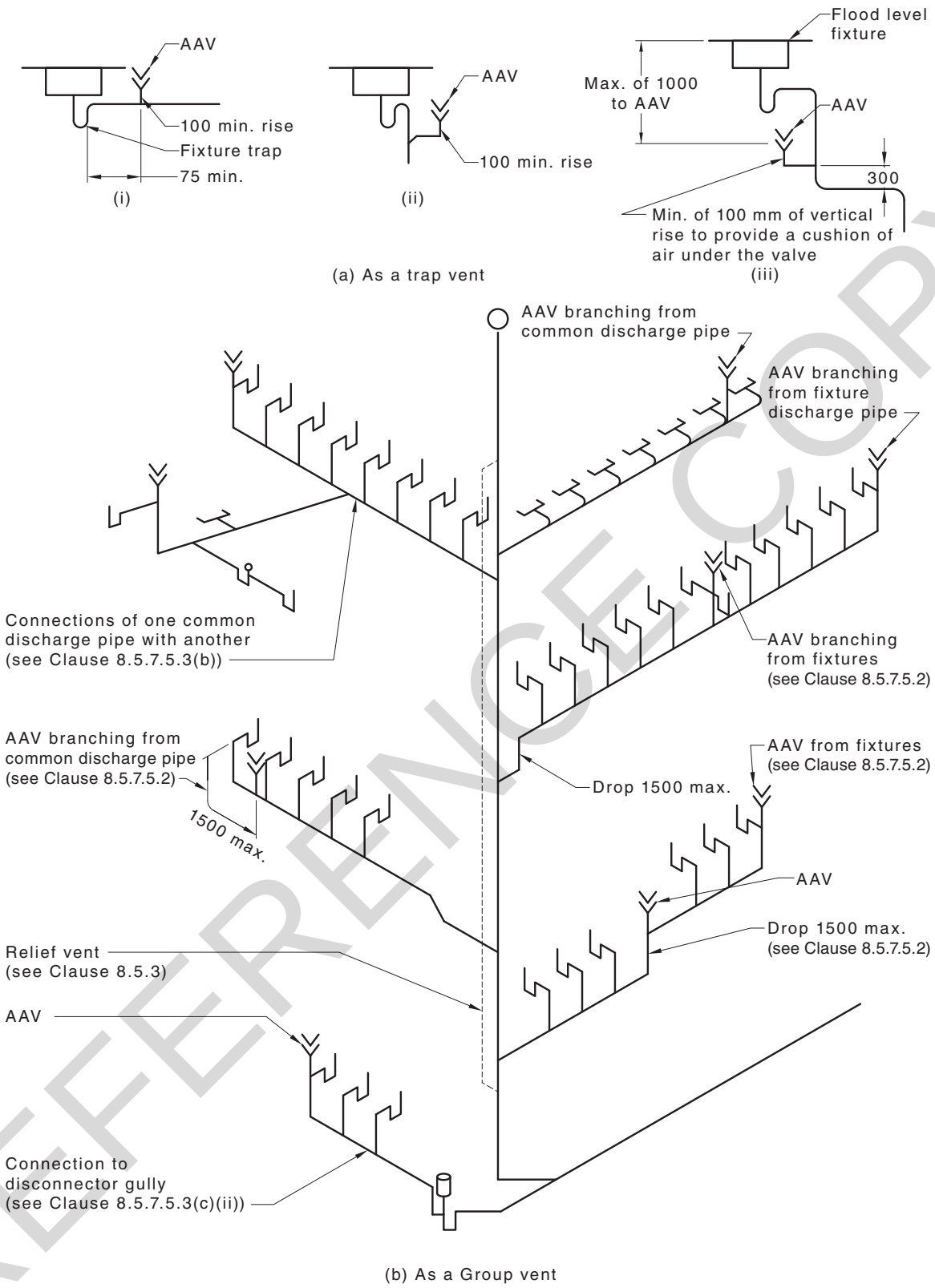

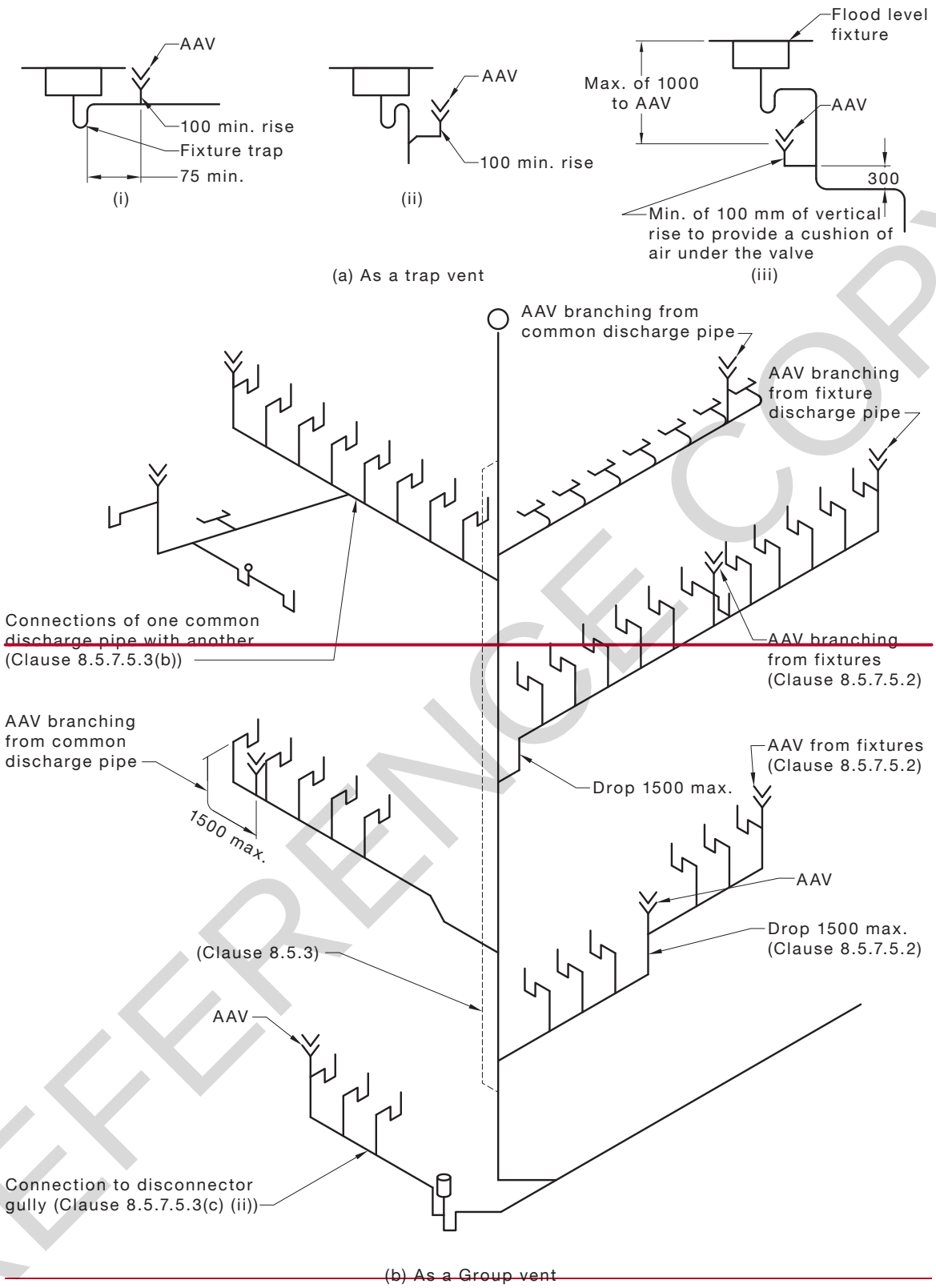

DIMENSIONS IN MILLIMETRES

FIGURE 6.9.4 FULLY VENTED MODIFIED SYSTEM USING AIR ADMITTANCE VALVES

6.10 PRESSURE ATTENUATORS

6.10.1 General

Pressure attenuators may be used in sanitary plumbing systems as an alternative to relief venting. Attenuators are used to counter the tendency for the loss of trap water seals resulting from positive pressure pulses in discharge stacks. Positive pressure pulses or transients arise from disruptions to airflow produced at changes in direction or restriction to the airflow path.

The size of the pressure attenuator is independent of stack size and fixture unit loading.

Although the application of pressure attenuators is not limited by building height, this Standard covers installation of pressure attenuators in sanitary plumbing stacks up to 50 floor levels only.

6.10.2 Installation of pressure attenuators

Pressure attenuators shall be—

(a) connected to stacks by means of 45° or sweep junctions;

(b) positioned above the point of connection in either a vertical or horizontal orientation; and

(c) adequately supported with allowance for thermal movement.

Connections to the stack, other than those immediately above the base of the stack or offset, shall be above the branch discharge pipes at that floor level.

NOTE: A typical connection of stack to pressure attenuators is shown in Figure 6.10.2.

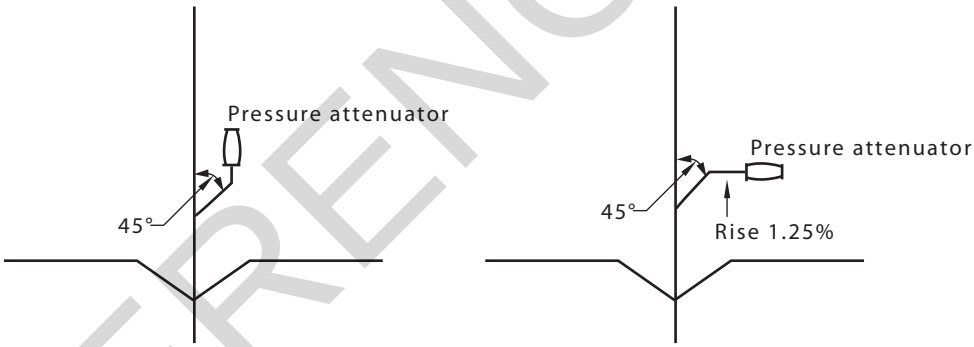

FIGURE 6.10.2 TYPICAL CONNECTION OF PRESSURE ATTENUATORS TO STACKS

6.10.3 Location

Pressure attenuators shall be accessible and installed in accordance with Table 6.10.3.

Where there is no stack offset, the connection for the lowest device shall be between the no-connection zone at the base of the stack and the first branch connected to the stack.

NOTE: For examples of pressure attenuator installations, see Figure 6.10.3.

Where there is a stack offset, the connection for the lowest device above the offset shall be between the no-connection zone above the graded offset within the stack and the first branch connected to the stack above that offset.

NOTE: For restricted zones, see Clause 8.6.2.3 and Figure 8.6.2.3.

Where the stack extends through more than 25 floors, two pressure attenuators, arranged in series, shall be used at the base of the stack.

NOTE: See Figure 6.10.3 (26–50 floors).

TABLE 6.10.3

LOCATION OF PRESSURE ATTENUATORS

Number of floor levels served by the stack above base or offset	Location of pressure attenuators
3–8	One at the base of the stack
9–15	One at the base of the stack, plus one at mid-level of the stack
6–25	One at the base of the stack, plus one at intervals not exceeding 5 floor levels
26–50	Two at the base of the stack, plus one at intervals not exceeding 3 floors up to level 25, and at intervals not exceeding 5 floors above level 25

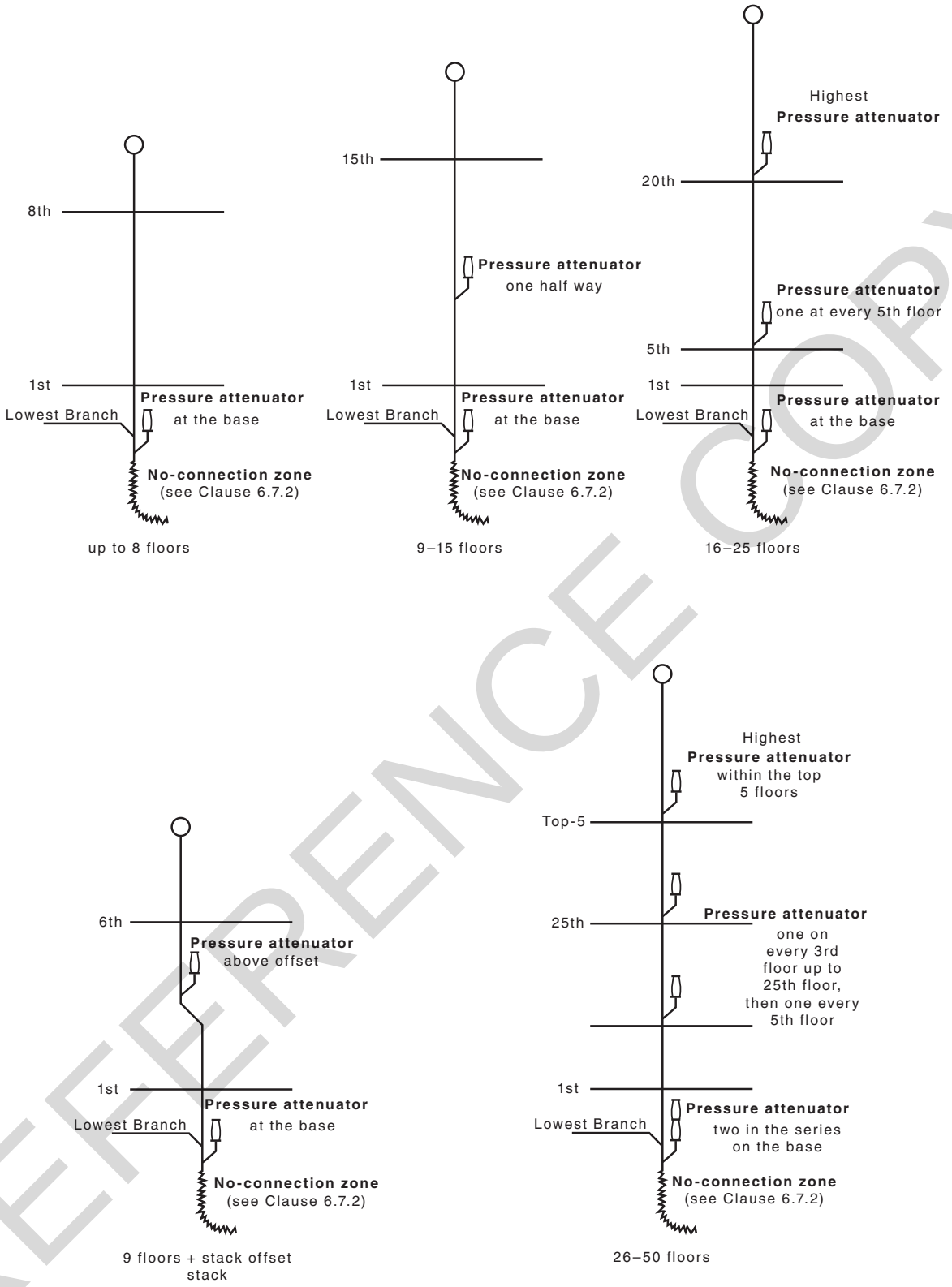

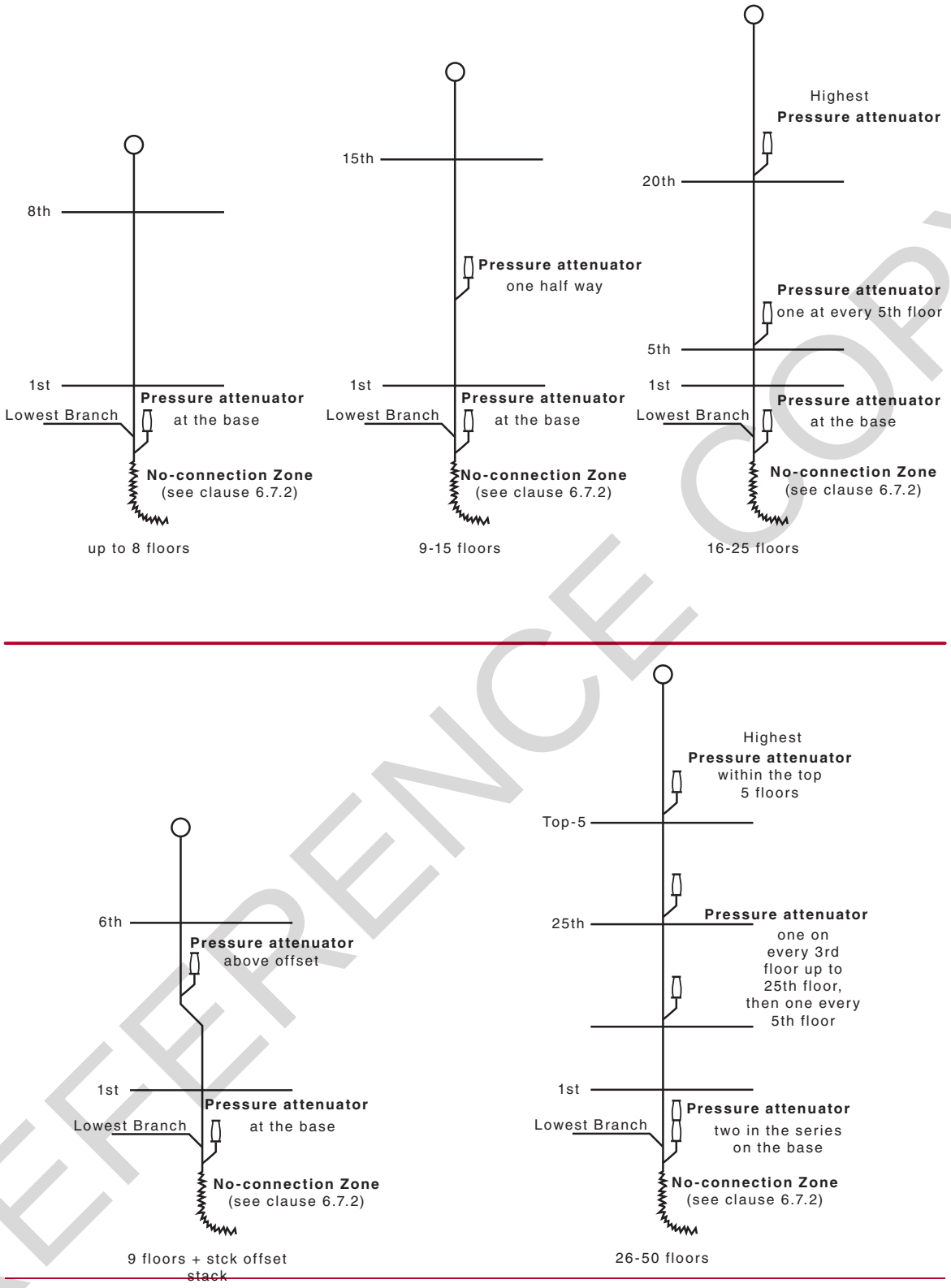

FIGURE 6.10.3 EXAMPLES OF TYPICAL PRESSURE ATTENUATOR INSTALLATIONS

6.11 RENOVATION

When renovating a sanitary plumbing system by relining, the requirements of Clause 3.16.3 shall apply.

SECTION 7 — GREYWATER PLUMBING AND DRAINAGE SYSTEMS

7.1 SCOPE OF SECTION

This Section specifies requirements for the installation of greywater sanitary plumbing and drainage from the respective plumbing fixtures to greywater treatment or diversion devices and overflow therefrom where directed to the drainage system.

Greywater systems may include one of the following:

(a) *Direct diversion ~~devices~~ devices:*

(i) ~~diversion~~ Diversion valve installed in the sanitary plumbing system~~; or~~.

(ii) ~~in ground~~ In-ground diversion vessels.

(b) *Treatment systems.*

7.2 GENERAL

Greywater plumbing and drainage systems shall be designed in such a manner so that—

(a) sewage surcharge cannot enter in-ground greywater diversion vessels or greywater treatment systems; and

(b) rainwater, stormwater and surface water cannot enter a network utility operator's sewerage system or an on-site wastewater disposal system such as a septic tank or common effluent system.

C7.2 *Where greywater use is being considered, a number of authorities should be consulted. These authorities include the following:*

(a) The network utility operator(s) responsible for drinking water supply and sewerage or both.

(b) The environmental protection authority.

(c) The respective health authority.

(d) Local councils.

Storage of untreated greywater for longer than 24 h is not recommended and may not be permitted under health requirements.

7.3 MATERIAL AND PRODUCTS

All pipes and fittings from a sanitary fixture to a greywater diversion vessel shall ~~comply~~ conform with Section 2.

7.4 INSTALLATION REQUIREMENTS

~~**7.4.1 Installation**~~

Sanitary plumbing and drainage piping from a sanitary fixture to a greywater system shall ~~comply~~ conform with the following:

(a) In an area serviced by a network utility operator's wastewater system, a permanent connection to the wastewater system shall be maintained to enable the greywater to be redirected into the sanitary drain.

(b) Greywater to be returned to the network utility operator's wastewater system shall be conveyed via a disconnector gully.

(c) All access openings to any vessel shall be securely sealed and vermin-proofed.

(d) Greywater sanitary plumbing and drainage piping shall be installed directly to a treatment/diversion vessel and independently of other systems.

(e) Drainage from below-ground greywater diversion devices that gravitate to the sewer shall be protected from sewage surcharge by the installation of a reflux valve.

(f) All pipework greater than DN 80 connected to a diversion device or treatment system shall be clearly marked 'GREYWATER' at intervals not exceeding 1 m in accordance with AS 1345.

NOTE: A direct diversion device installed above the level of the overflow relief gully does not require protection from sewage surcharge.

SECTION 8 — FULLY VENTED SYSTEMS AND FULLY VENTED MODIFIED SYSTEMS — DESIGN AND INSTALLATION

8.1 SCOPE OF SECTION

This Section specifies design requirements and methods of installation for fully vented systems and fully vented modified systems of sanitary plumbing.

8.2 SYSTEM TYPES

8.2.1 General

Systems installed in buildings may comprise either of the venting systems described in this Clause (8.2) or a combination of both systems.

8.2.2 Fully vented system

A fully vented system shall comprise a system of sanitary plumbing with provision for the individual venting of every fixture trap by means of a trap vent or air admittance valve (except for any traps that discharge to a floor waste gully) and in which a relief vent is installed and is in accordance with the maximum fixture unit loadings in Tables 8.2.2(A) and 8.2.2(B).

TABLE 8.2.2(A)

MAXIMUM FIXTURE UNIT LOADINGS FOR GRADED DISCHARGE PIPES

Grade %	Nominal size of pipe~~,~~ DN							
	40	50	65	80	100	125	150	225
5.00	6	15	51	65	376	953	1959	7098
3.35	5	10	29	39	248	686	1445	5583
2.50	4	8	21	27	182	509	1148	4513
2.00	×	×	×	20	142	410	953	3739
1.65	×	×	×	16	115	342	813	3258
1.25	×	×	×	×	×	254	627	2656
1.00	×	×	×	×	×	×	509	2272

NOTES:

1 Appendix ~~D~~ C provides a table for conversion of grades as a percentage to grades as a ratio.

2 The symbol '×' indicates that the combination of pipe size and grade is not acceptable.

TABLE 8.2.2(B)

MAXIMUM LOADINGS ON STACKS IN FIXTURE UNITS

Size of stack DN	Maximum loading per floor level	Maximum loading per stack
(a) Four or more floor levels		
40	4	16
50	9	36
65	14	56
80	20	80
100	125	500
125	250	1000
150	600	2400
225	1750	7000
(b) Three or fewer floor levels		
40	2	6
50	5	15
65	6	18
80	13	40
100	65	195
125	150	450
150	250	750
225	950	2850

8.2.3 Fully vented modified system

A fully vented modified system shall comprise a system of sanitary plumbing differing from the fully vented system in that each branch or discharge pipe connected to the stack is vented and some individual fixture trap vents or air admittance valves are omitted, and in which groups of two or more fixtures that discharge to the same graded pipe or branch are vented by means of one or more group vents or air admittance valves.

8.3 SIZE OF DISCHARGE PIPES

8.3.1 General

Discharge pipes shall be not less than the size of the fixture traps to which they are connected except for water closet pans and slop hoppers, which may be connected to DN 80 discharge pipes.

8.3.2 Fixture unit loading

The size of any discharge pipe shall be determined from Table 8.2.2(A), taking into account—

(a) the sum of the fixture units that it carries [see Tables 6.2(A) and 6.2(B)]; and

(b) the proposed pipe grade.

8.3.3 Minimum size

The minimum size of any discharge pipe shall be DN 40.

8.3.4 Limitation on DN 80 pipes

Not more than two water closet pans shall be connected to a DN 80 discharge pipe.

8.3.5 Oversizing

Graded discharge pipes shall not be oversized for the sole purpose of acquiring a grade less than the minimum grades specified in Table 6.5.1.

8.4 SIZE OF STACKS

Stacks shall be sized in accordance with the following:

(a) The sum of the fixture unit ratings of all fixtures connected to any stack shall constitute the loading on the stack.

(b) Depending on the number of floor levels, the total loading on any stack shall not exceed the maximum given in Table 8.2.2(B).

(c) The total load increment from fixtures from any one floor level—

(i) for stacks of four floor levels or more, shall not exceed 25% of the maximum stack capacity as specified in Table 8.2.2(B); and

(ii) for stacks of three floor levels or less, shall not exceed 33% of the maximum stack capacity as given in Table 8.2.2(B).

(d) Such limitations as to the maximum fixture unit loading discharging into any stack within any one floor level, as specified in Item (c), shall also apply to connections to any section of a stack with a vertical length of 2.4 m into which one or more graded pipes, branches or stacks are connected as shown in Figure 8.4.

(e) Where the fixture unit loading at any one floor level exceeds the loading given in Table 8.2.2(B), the stack shall be increased in size.

(f) Where a DN 80 stack is installed as a fully vented modified system, the maximum number of water closet pans and slop hoppers connected to any graded pipe or branch shall not exceed two.

(g) Where any stack is offset, the offset section shall be sized—

(i) as a straight stack, if the offset is ~~more than~~ 45° to the horizontal or greater; or

(ii) as a graded pipe, if the offset is less than 45° to the horizontal, and the stack shall continue undiminished in size to above the highest connection.

Any reduction in stack size, as given in Table 8.5.3.5, shall only be made above the highest connection.

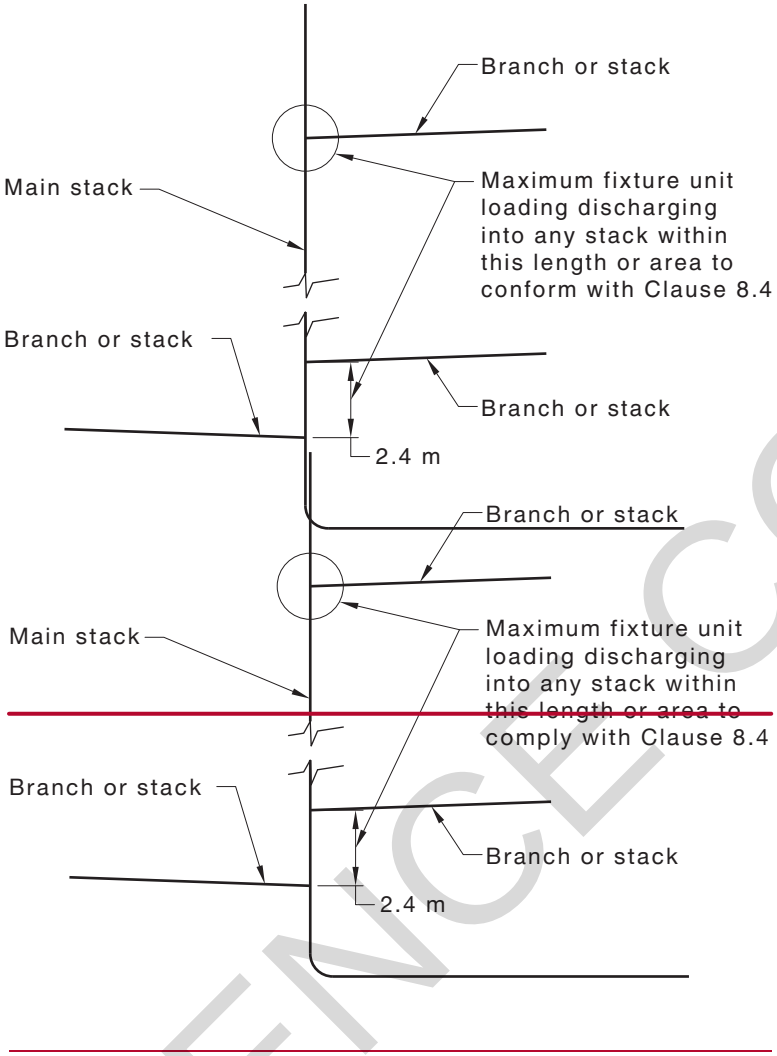

FIGURE 8.4 LIMITATIONS APPLYING TO BRANCH CONNECTIONS TO STACKS

8.5 VENTING

8.5.1 Trap vents

8.5.1.1 *Connection for fixtures*

Trap vents shall be connected to fixture discharge pipes in accordance with the following:

(a) For basins and bidets, the vent shall be connected not closer than 75 mm and not further than 600 mm from the crown of the fixture trap, provided no change of direction occurs between the trap and the vent connection, as shown in Figure 8.5.1.1.

(b) For fixtures other than basins and bidets, the vent shall be connected between 75 mm and 1500 mm from the crown weir of the fixture trap, provided where the S-trap is fitted or a bend is fitted downstream of the P-trap, the vent connection on the vertical discharge pipe is at least 300 mm from any bend at the base of the vertical section.

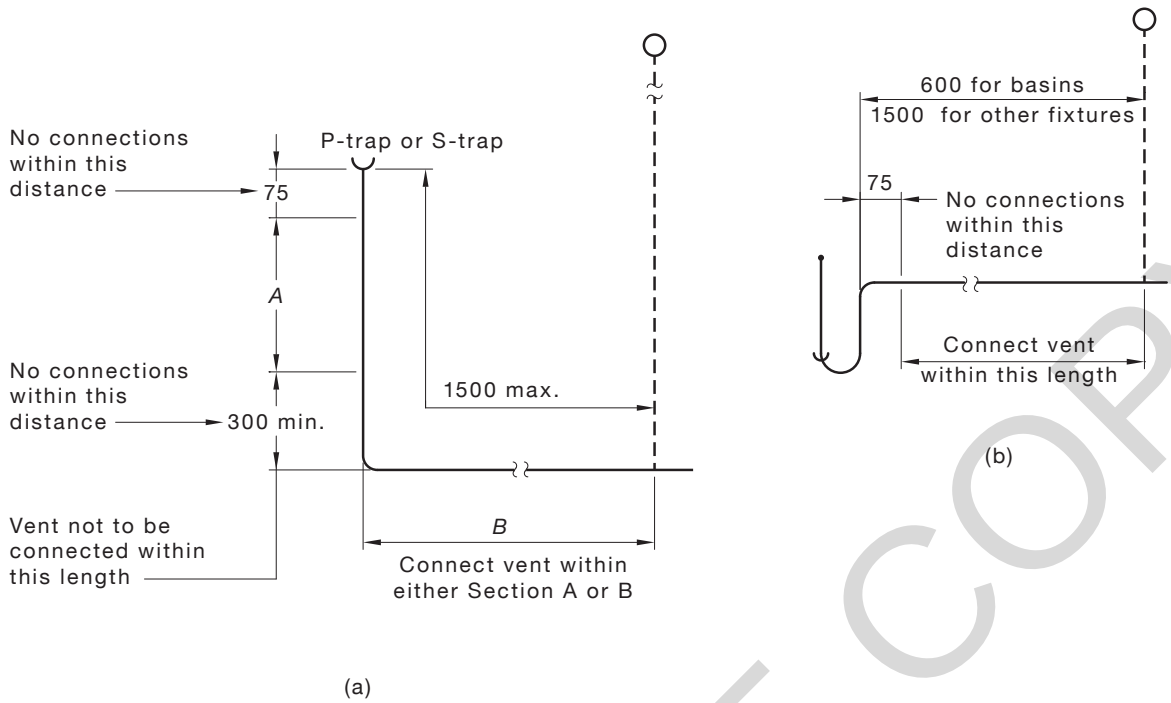

DIMENSIONS IN MILLIMETRES

FIGURE 8.5.1.1 TRAP VENTS

8.5.1.2 *Topmost fixture connected to the stack*

Where the topmost discharge pipe connection to the stack exceeds 6 m for combination pan rooms sinks (DN 100), slop hoppers (DN 100), water closet pans and 2.5 m for all other fixtures, a trap vent shall be connected in accordance with Clause 8.5.1.1.

8.5.1.3 *Size*

The minimum size of trap vents shall be as specified in Table 8.5.1.3.

TABLE 8.5.1.3

MINIMUM SIZE OF TRAP VENTS

Size of fixture trap DN	Size of trap vent DN
40	32
≥50 ≤100	40

8.5.1.4 *Installation*

Every trap vent shall be extended upwards to a point above the flood level rim of the fixture in accordance with one of the following:

(a) As a vertical vent to open air.

(b) On an ascending grade of at least 1.25%, as a vertical vent to the open air.

(c) On an ascending grade of at least 1.25% to a connection with a vertical or branch vent.

(d) Looped downwards, either vertically or on a descending grade of at least 1.25% to a connection at lower level with a vertical or branch vent.

NOTE: For typical installation of trap vents, see Figure 8.5.1.4.

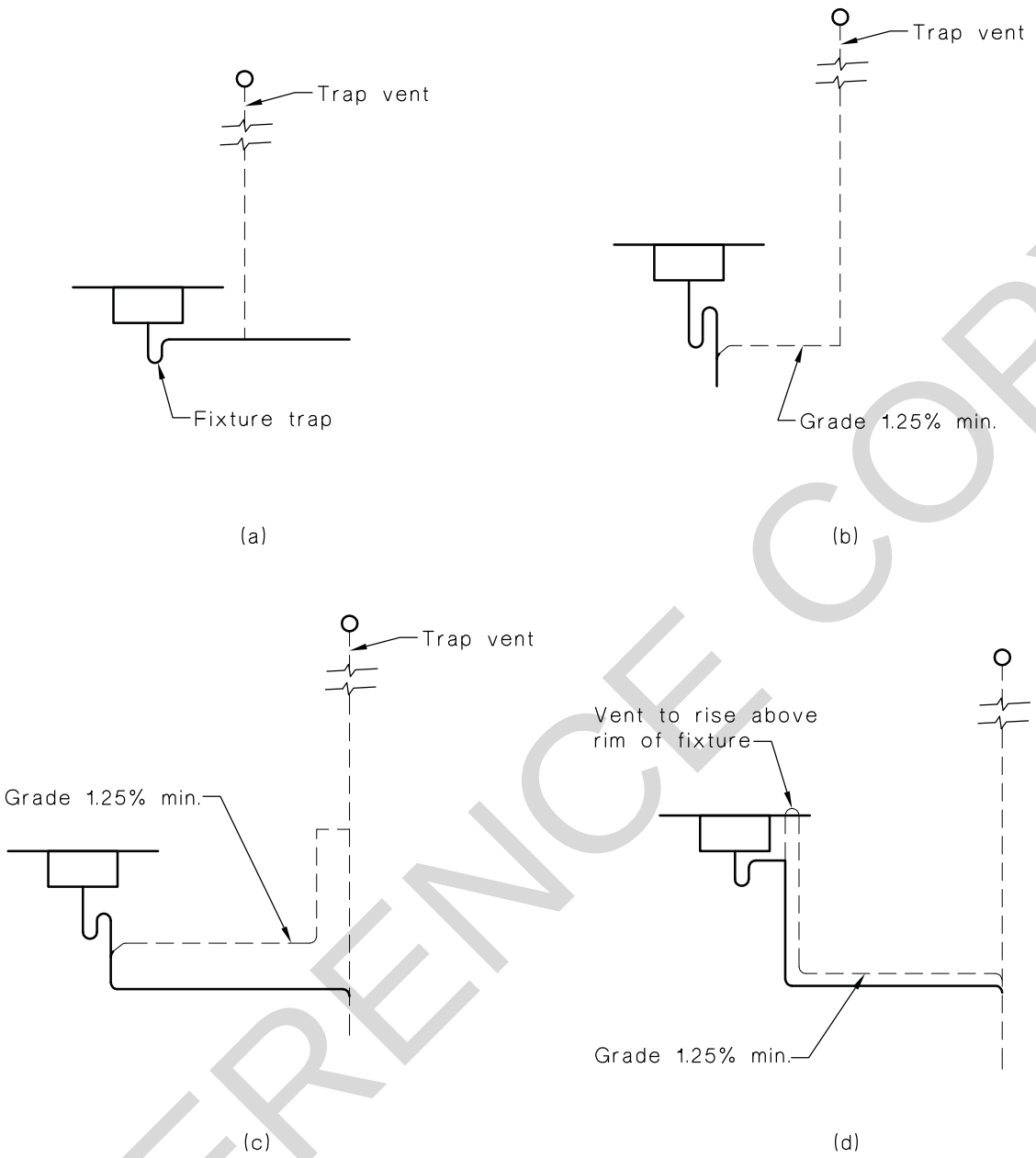

FIGURE 8.5.1.4 TYPICAL INSTALLATION OF TRAP VENTS

8.5.1.5 *Common vent for fixtures*

A single vent pipe may be used to ventilate the traps of any two fixtures connected in common to a vertical discharge pipe, provided—

(a) P-traps are used;

(b) where the discharge pipes from both fixtures are connected at the same level, either a Y-junction with a 90° included angle or a junction with opposed sweep entries is used;

(c) the vent pipe is sized for the larger trap; and

(d) the distance from the weir of either trap to the vent connections ~~complies~~ conforms with Clause 8.5.1.1.

NOTE: For examples of common vents for fixtures, see Figure 8.5.1.5.

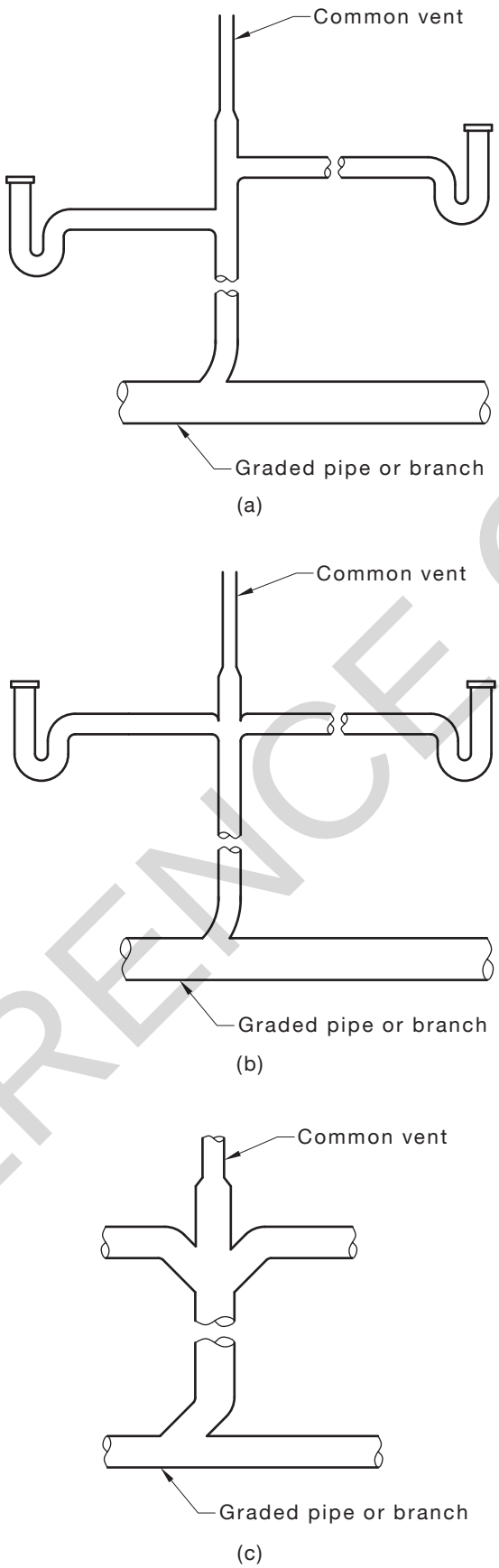

FIGURE 8.5.1.5 COMMON VENT FOR FIXTURES

8.5.2 Branch vents

8.5.2.1 *Size*

The size of any branch vent shall be in accordance with Table 8.5.2.1.

TABLE 8.5.2.1

MINIMUM SIZE OF BRANCH VENTS

Size of branch discharge pipe DN	Size of branch vent DN
40	32
50	40
65	40
80	50
100	50
150	80

8.5.2.2 *Arrangement*

Branch vents ~~are~~ shall be used to interconnect two or more trap vents or group of vents.

~~The following applies to the installation of branch vents:~~

~~(a) Branch vents may interconnect with relief vents or stack vents, or extend separately upwards to the open air.~~

~~(b)~~The point of connection between any branch vent and any other vent shall be above the flood level rim of the highest fixture connected to the common graded pipe or branch served by the branch vent.

Branch vents may interconnect with relief vents or stack vents, or extend separately upwards to the open air.

8.5.2.3 *Size changes*

Where the branch discharge pipe varies in size along its length, the corresponding sections of a branch vent shall be sized separately in accordance with Table 8.5.2.1. Any enlargement in size in the branch vent shall occur prior to the junction with the trap vent or group vent as sown in Figure 8.5.2.3.

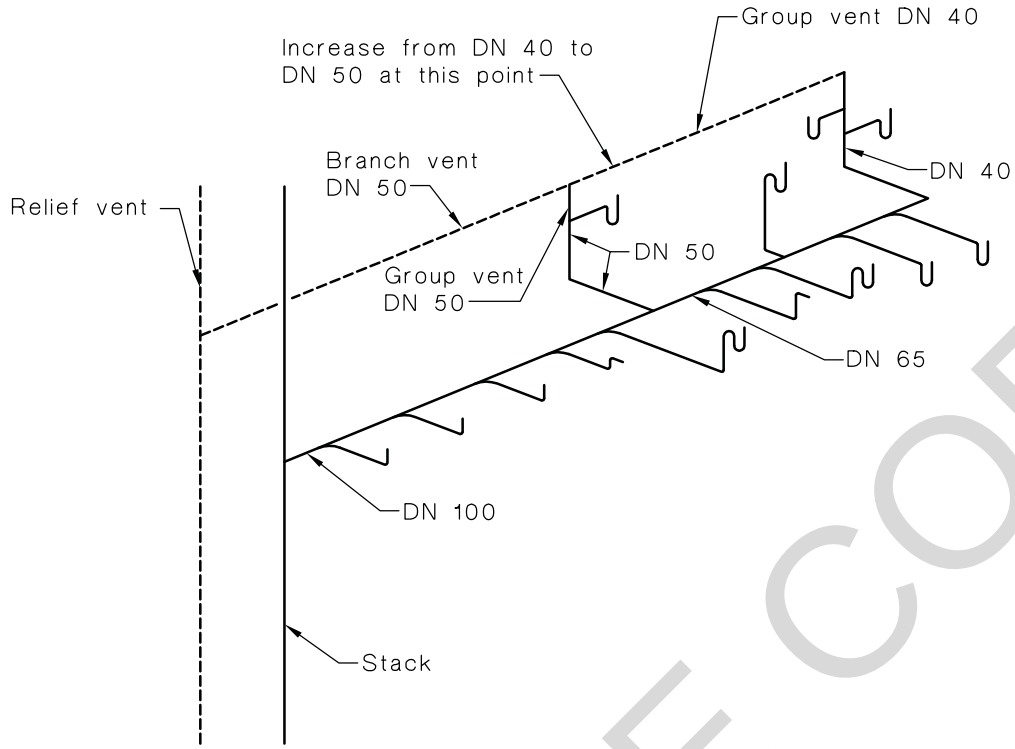

FIGURE 8.5.2.3 SIZING OF BRANCH VENTS

8.5.3 Relief vents

8.5.3.1 *General*

If one or more floors separate the floor levels of the highest and lowest branch pipe connected to the stack, a relief vent shall be installed in accordance with Clauses 8.5.3.2 to 8.5.3.5, or pressure attenuators may be installed as specified in Clause 6.10.

NOTE: For a typical relief vent installation, see Figure 8.5.3.1.

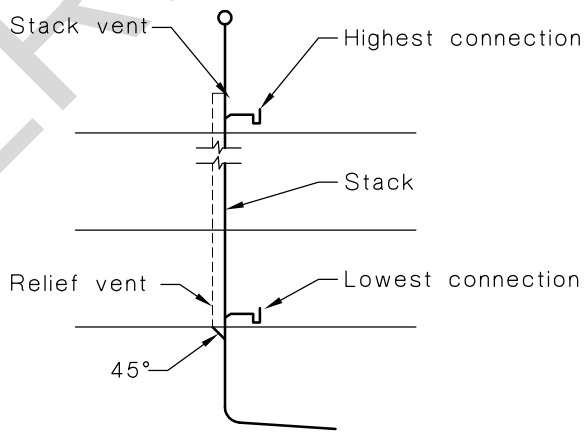

FIGURE 8.5.3.1 TYPICAL RELIEF VENT INSTALLATION

8.5.3.2 *At offsets in stacks*

Where any stack is offset at less than 45° to the horizontal, a relief vent shall be provided—

(a) on the stack below the offset if, disregarding the offset, one or more floors separate the floor levels of the highest and lowest branch pipe connected to the stack; and

(b) on the stack above the offset, if one or more floors separate the floor levels of the highest and lowest branch pipe connected to the section of the stack above the offset.

NOTE: For typical relief vent installations at stack offsets, see Figure 8.5.3.2.

The lower relief vent may interconnect with the upper relief vent above the flood level rim of the lowest fixture served by the upper relief vent.

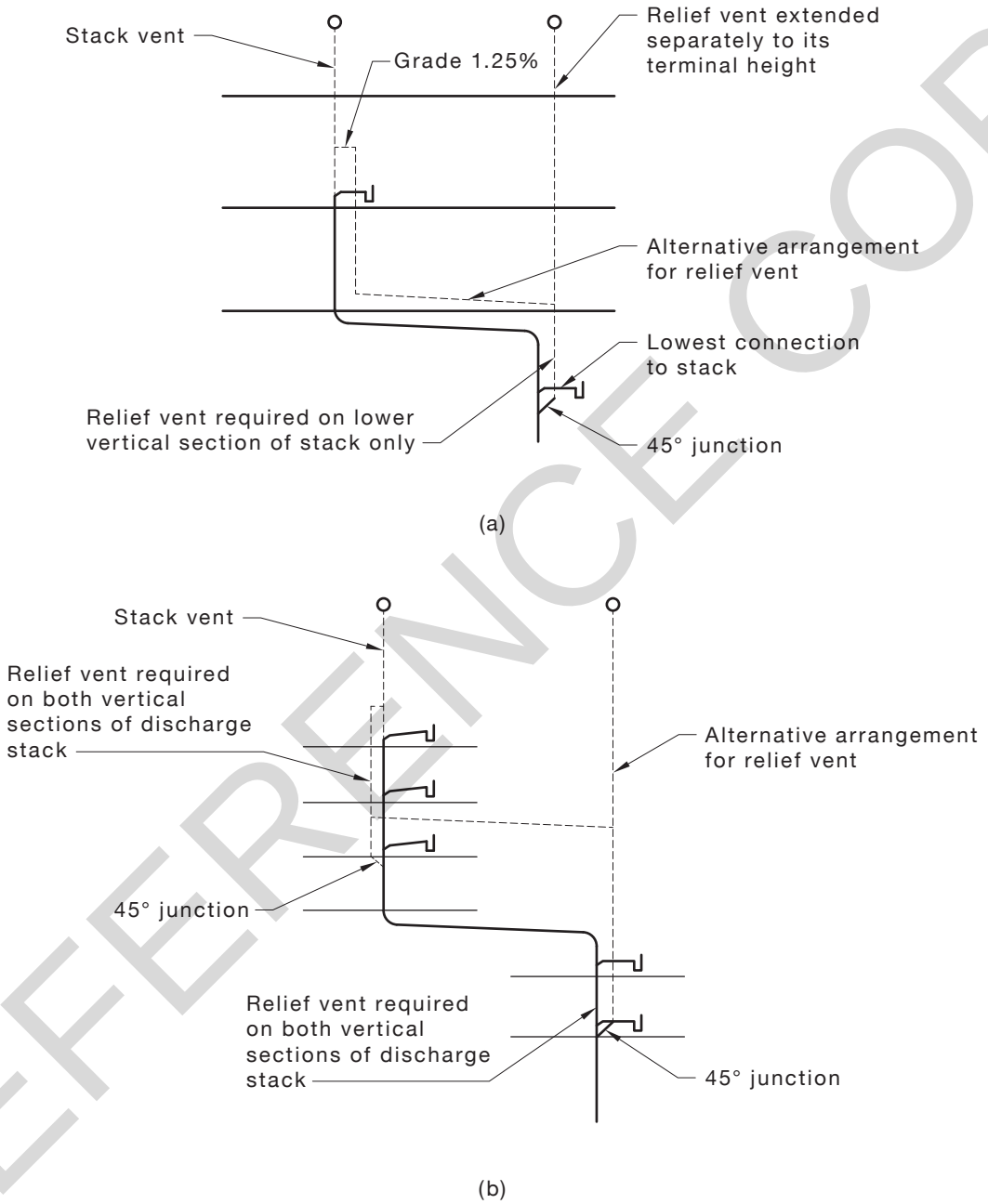

FIGURE 8.5.3.2 TYPICAL RELIEF VENT INSTALLATIONS AT STACK OFFSETS

8.5.3.3 *Connection*

Relief vents shall be connected to stacks, below the lowest connection, at an angle of 45°.

NOTE: For an illustration, see Figure 8.5.3.1.

8.5.3.4 *Upper termination*

Relief vents shall either—

(a) extend upwards at a minimum grade of 1.25% and interconnect with a stack vent, a header vent or another relief vent; or

(b) extend upwards to the open air and terminate in accordance with Clause 6.8.4.

8.5.3.5 *Size*

The size of any relief vent shall be in accordance with Table 8.5.3.5, having regard to the size of the stack, the sum of the rating of all fixtures connected and the developed length of the vent measured along the pipework from its lowest connection to the stack to its upper termination point.

A relief vent need not be larger than the stack to which it is connected.

TABLE 8.5.3.5

SIZE OF RELIEF VENTS AND STACK VENTS

Size of stack DN	Maximum fixture units connected	Maximum developed lengths of vents, m							
		Required vent size, DN							
		32	40	50	65	80	100	125	150
40	16	6	15						
50	20	8	15	46					
50	36	6	10	30					
65	20		12	40	110				
65	56		7	24	80	170			
80	20		8	27	70	110			
80	80			12	20				
100	150			9	25	70	280		
100	300			8	22	60	216		
100	500			6	19	50	197		
125	300				9	22	95	280	
125	750				7	19	72	230	
125	1100				6	14	62	190	
150	700				4	9	37	155	300
150	1300					7	30	130	250
150	2400					6	24	100	200
225	1700							16	62
225	4000							14	43
225	7000							6	31

8.5.4 Stack vents

8.5.4.1 *Extension*

The stack vent may extend separately to atmosphere or interconnect with the relief vent above the overflow level of the highest fixture connected to the stack, and shall be sized in accordance with Table 8.5.3.5, except that the stack vent need not be larger than the stack.

8.5.4.2 *Developed length*

The developed length of the stack vent shall be—

(a) for stacks with relief vents, the length of the relief vent; or

(b) for stacks without relief vents, the length of stack vent and stack to the point of connection of the lowest branch.

8.5.5 Cross-relief vents

Cross-relief vents shall be installed in accordance with the following:

(a) Vertical sections of stacks, 20 floor levels or more in height, measured between the highest graded pipe or branch connected and the point of connection of any relief vent shall be cross-relief vented to the relief vent at intervals of not more than 10 floor levels.

(b) The size of the cross-relief vent shall be the size of the main relief vent or the size of the stack, whichever is the smaller.

(c) Cross-relief vents shall connect into the stack at an angle of 45°.

(d) Cross-relief vents shall commence from below the lowest branch connection to the stack from the floor level concerned and join into the main relief vent above the flood level rim of the lowest fixture, discharging into the stack at that floor.

(e) For a stack with a steep offset, such stack shall be deemed to be straight with only one vertical section.

NOTE: For a typical installation of a cross-relief vent, see Figure 8.5.5.

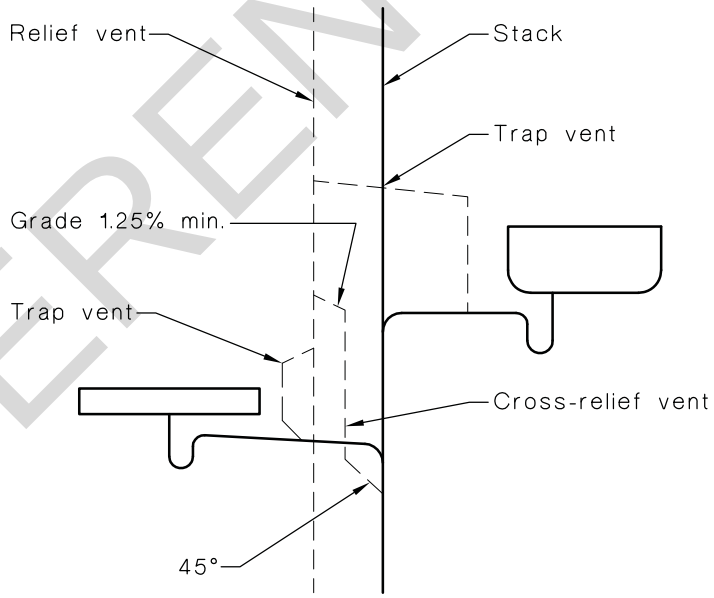

FIGURE 8.5.5 TYPICAL INSTALLATION OF CROSS-RELIEF VENT

8.5.6 Header vents

8.5.6.1 *General*

Stack vents may be connected at their uppermost end into a common header vent terminating at one point.

NOTE: For a typical ~~example~~header vent size, see Figure 8.5.6.1.

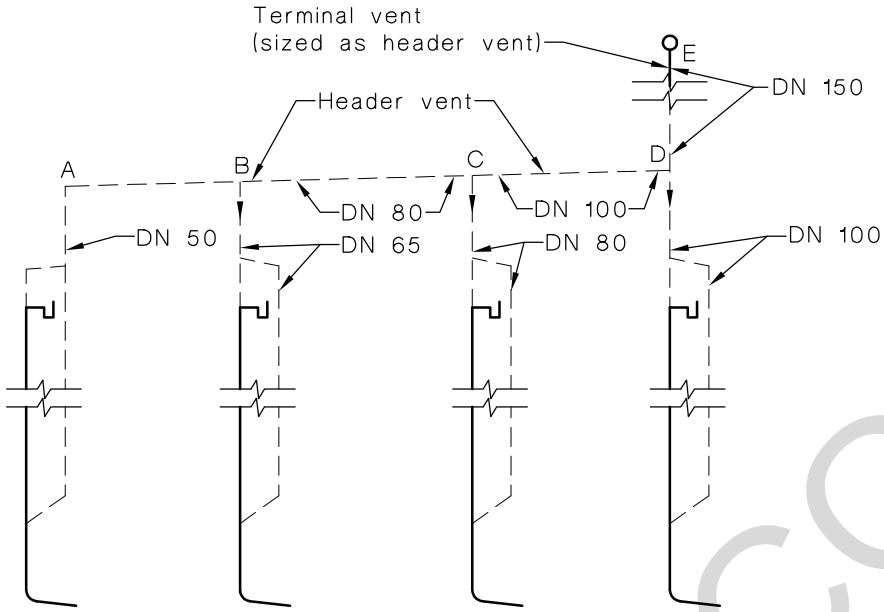

LEGEND:

Size of AB	=	DN 50
BC	=	1 + 2 equivalent units
	=	DN 80
CD	=	1 + 2 + 3 equivalent units
	=	DN 100
DE	=	1 + 2 + 3 + 6 equivalent units
	=	DN 150

FIGURE 8.5.6.1 TYPICAL ~~EXAMPLE OF~~ HEADER VENT SIZE

8.5.6.2 *Sizing*

Header vents shall be sized in accordance with the following procedure:

(a) Determine from Table 8.5.6.2 the number of DN 50 vents that are equivalent to individual stack vents or relief vents intercepted at lower level by the header vent.

(b) Add together all such numbers.

(c) From Table 8.5.6.2 note the size of single equivalent header vent.

(d) Where a stack has a relief vent, take into account the size of only the relief vent in the determination of the equivalent number of DN 50 vents.

(e) Where any change in size is to be made on the graded header vent, increase the size downstream of, and adjacent to, the vent junction.

NOTE: Header vents need not be greater than DN 300.

TABLE 8.5.6.2

SIZE OF HEADER VENTS

Size of stack vent or relief vent DN	Equivalent number of DN 50 vents	Size of header vent DN
50	1	50
65	2	65
80	3	80
100	6	100
125	11	125
150	18	150
250	72	250
300	117	300

8.5.7 Group and common vents

8.5.7.1 *General*

One group vent shall be provided for each 10 fixtures, or part thereof, in any group connected to a common discharge pipe.

In order to determine which group of fixtures shall be group-vented, each fixture discharge pipe that is individually connected to the common discharge pipe shall be counted progressively from the fixture discharge pipe nearest the stack. Any vented fixture discharge pipe that is connected to the common discharge pipe shall not be included in such a method of counting.

8.5.7.2 *Arrangement*

Group vents shall be installed in accordance with the following:

(a) The first group vent, for all types of fixtures, shall connect to the discharge pipe of the most upstream fixture or floor waste gully at a maximum distance of 1.5 m from the fixture trap.

(b) The second group vent, and any additional group vents, shall be spaced along the common discharge pipe to divide the fixtures into approximately equal groups and each shall branch either from a fixture discharge pipe, increased in size where necessary to the size of the group vent, or from the top of the common discharge pipe.

(c) Where any vertical drop occurs in a common discharge pipe and fixtures are connected to the lower section, a group vent shall be provided—

(i) from the top of the vertical drop;

NOTE: For maximum vertical drop, see Clause 8.5.7.5.2.

(ii) between the vertical drop and the first downstream fixture; or

(iii) from the first downstream fixture discharge pipe.

The common vent pipe from any two fixtures installed in accordance with Clause 8.5.1.5 may also serve as a group vent.

8.5.7.3 *Sizing*

The size of group vents shall be determined by the size of the common discharge pipe in accordance with Table 8.5.7.3.

Where a common discharge pipe varies in size along its length, the group vent shall be sized in relation to the largest section of the common discharge pipe.

TABLE 8.5.7.3

SIZE GROUP VENTS

Size of common discharge pipe DN	Size of single group vent DN
40	32
50	40
65	40
80	50
100	50

8.5.7.4 *Termination*

Group vents shall terminate in the same manner as branch vents, as specified in Clause 8.5.2.2, or with an air admittance valve (AAV) in accordance with Clause 6.9.

8.5.7.5 *Group-vented branches*

8.5.7.5.1 *Size*

Group-vented branches shall be sized in accordance with Clause 8.5.7.3 except that, if the group vent is larger than the discharge pipe to which it connects, the discharge pipe shall be increased to the size of the group vent.

NOTE: A typical vented system showing group vents is depicted in Figure 8.5.7.5.1.

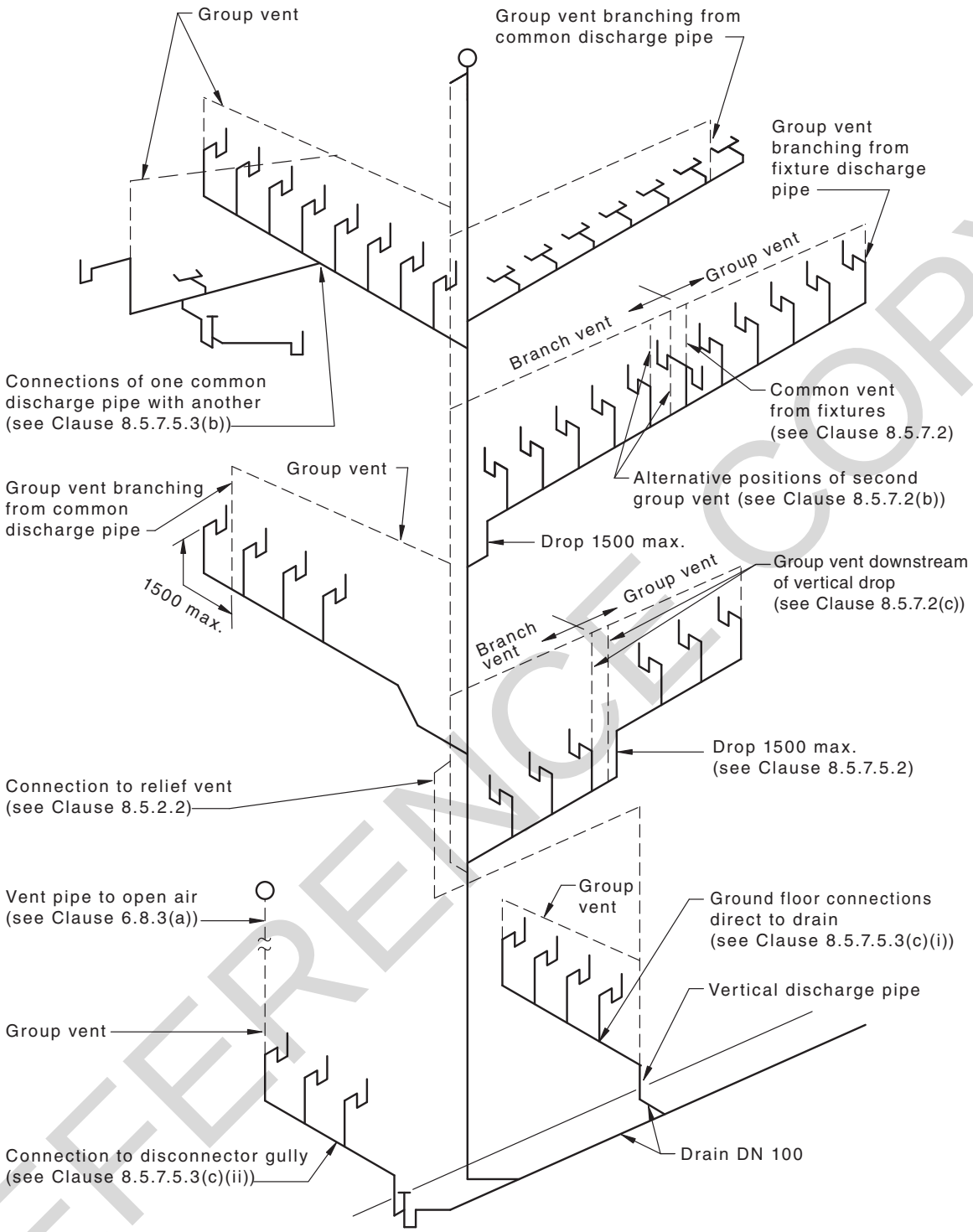

DIMENSIONS IN MILLIMETRES

FIGURE 8.5.7.5.1 TYPICAL FULLY VENTED MODIFIED SYSTEM SHOWING GROUP VENTS

8.5.7.5.2 *Arrangement*

Group-vented branches shall be installed on a grade with a maximum vertical drop of 1.5 m.

8.5.7.5.3 *Connection of common discharge pipe*

The common discharge pipe of any group-vented branch shall connect—

(a) directly to a stack;

(b) to a junction with another common discharge pipe; or

(c) for ground floor fixtures—

(i) direct to drain; or

(ii) to a disconnector gully.

8.5.7.5.4 *Connection of basins and bidets*

When connected to a group-vented branch, each basin and bidet shall have a DN 40 trap and fixture discharge pipe not greater than 2.5 m in length with a maximum vertical drop of 1.5 m. The maximum number of bends in a fixture discharge pipe shall be in accordance with Clause 9.5.4.

NOTE: A typical connection of a basin or bidet of a group-vented branch is depicted in Figure 8.5.7.5.4.

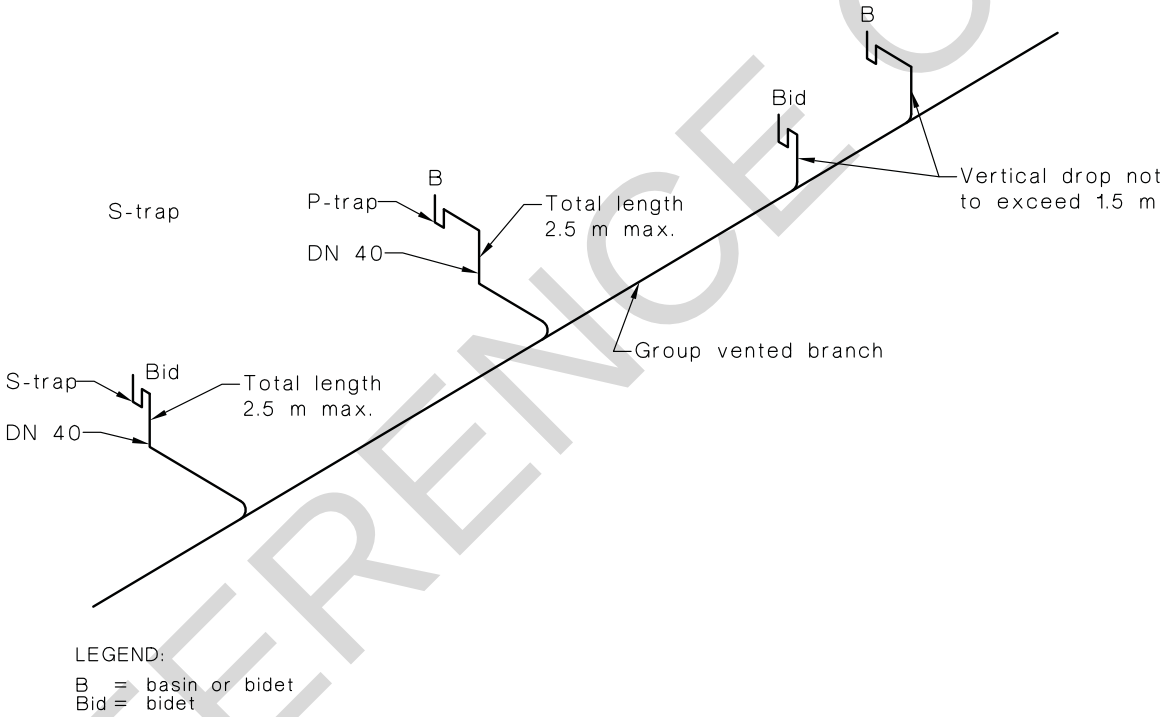

FIGURE 8.5.7.5.4 TYPICAL CONNECTION OF BASIN OR BIDET TO A GROUP-VENTED BRANCH

8.5.7.5.5 *Connection of all other fixtures*

Fixtures other than basins and bidets shall—

(a) be connected separately to the group-vented branch except as provided in Clause 8.5.7.2;

(b) have a length of any DN 100 fixture discharge pipe not greater than 6 m;

(c) have a length of any fixture discharge pipe smaller than DN 100 not greater than 2.5 m;

(d) have a maximum vertical interval between the crown of the trap and the top of the group vented branch of 2.5 m;

(e) have the maximum number of bends in a fixture discharge pipe ~~comply~~ conform with Clause 9.5.4; and

(f) have a reducer fitting installed where a water closet pan with a DN 100 outlet connects to a graded pipe or branch of DN 80.

8.6 OFFSETS IN STACKS

8.6.1 Steep offsets

8.6.1.1 *General*

A steep offset is any offset made at an angle of more than 45° to the horizontal.

8.6.1.2 *Sizing of stack*

The size of the steep offset stack shall be in accordance with Clause 8.4(g) and the maximum fixture unit loading shall ~~comply~~ conform with Table 8.2.2(B).

8.6.1.3 *Venting*

Venting for the steep offset stack shall be in accordance with the following:

(a) Where a relief vent is installed below the lowest connection to the stack as specified in Clause 8.5.3.1, additional relief vents in close proximity to the bends of the offset are not required.

(b) Cross-relief vents shall be installed in accordance with Clause 8.5.5.

(c) Stack vents shall be installed in accordance with Clause 8.5.4.

8.6.2 Graded offsets

8.6.2.1 *General*

A graded offset is any offset made at an angle of less than 45° to the horizontal.

8.6.2.2 *Minimum grade*

The minimum grade of a graded offset shall be in accordance with Table 8.6.2.2.

TABLE 8.6.2.2

MINIMUM GRADE OF OFFSETS

Size of graded section DN	Min. gradient %
≤80	2.50
100	1.65
125	1.25
150	1.25
225	0.60
300	0.40

8.6.2.3 *Restricted connection zones above the graded offset*

For graded offsets, no connection shall be made within—

(a) 600 mm of the bend, when the stack extends not more than five floor levels above the offset;

(b) 1 m of the bend when the stack extends more than five floor levels above the offset; or

(c) 2.5 m, when foaming is likely to occur.

NOTE: For restricted connection zone above the graded offset, see Figure 8.6.2.3.

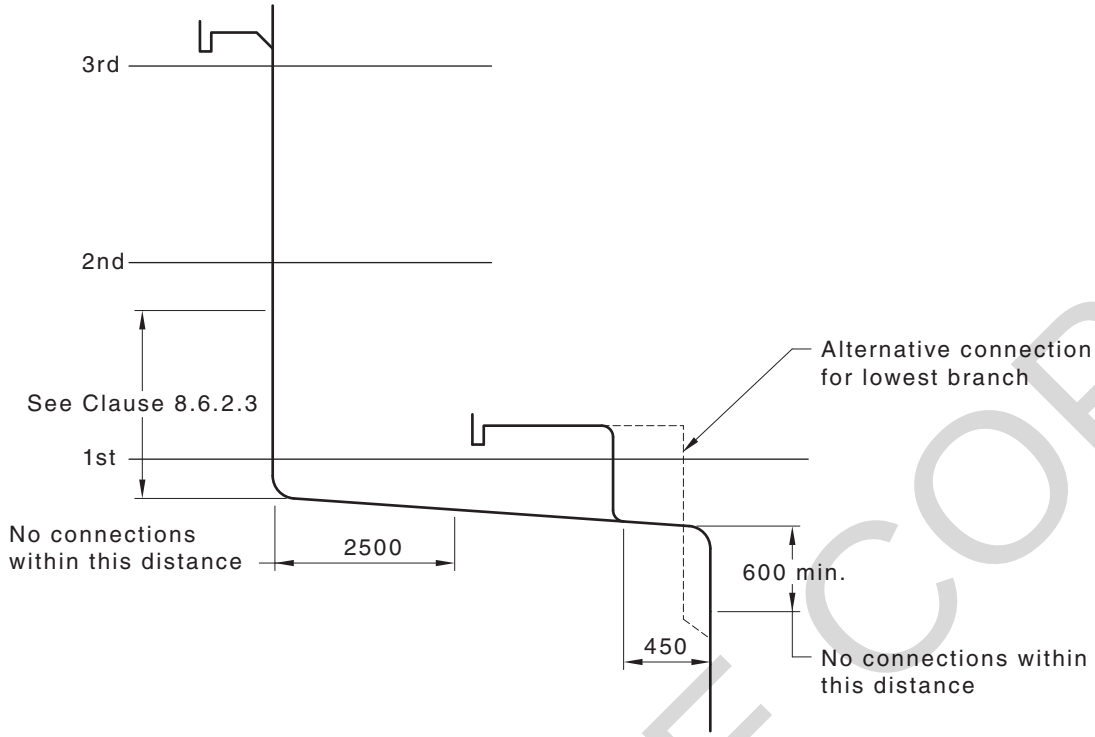

DIMENSIONS IN MILLIMETRES

FIGURE 8.6.2.3 CONNECTIONS AT GRADED OFFSET

8.6.2.4 *Restricted connection zone below the graded offset*

No connection shall be made within 600 mm of the bend.

NOTE: For restricted connection zone below the graded offset, see Figure 8.6.2.4.

8.6.2.5 *Restricted connection zone within the graded offset*

No connection shall be made within—

(a) 2.5 m of the upper bend; or

(b) 450 mm of the lower bend.

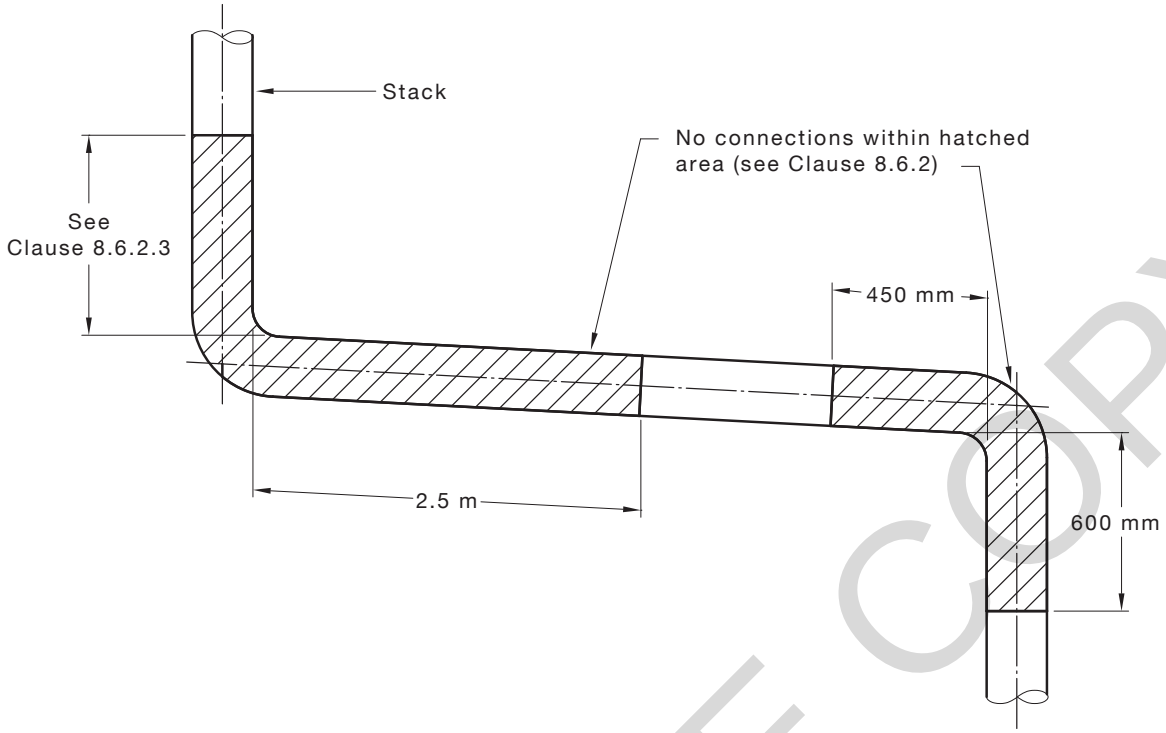

FIGURE 8.6.2.4 CONNECTIONS AT OFFSET OF STACK

8.6.2.6 *Sizing of stack*

The size of the graded offset stack shall be in accordance with Clause 8.4(g) and the maximum fixture unit loading on the graded section shall ~~comply~~ conform with Table 8.2.2(A).

8.6.2.7 *Venting*

Positive air pressure pulses in a stack with a graded offset shall be controlled by either one of the following methods:

(a) Venting in accordance with the following:

(i) Relief vents shall be installed in accordance with the relevant clauses of Clause 8.5.3.

NOTE: For typical installation, see Figure 8.5.3.1 or Figure 8.5.3.2.

(ii) Cross-relief vents shall be installed in accordance with Clause 8.5.5.

(iii) Stack vents shall be installed in accordance with Clause 8.5.4.

(b) Using pressure attenuators in accordance with Clause 6.10.

SECTION 9 SINGLE STACK SYSTEMS AND SINGLE STACK MODIFIED SYSTEMS—DESIGN AND INSTALLATION

9.1 SCOPE OF SECTION

This Section specifies design and installation requirements for single stack systems and the single stack modified systems of sanitary plumbing.

9.2 SYSTEM DESIGN

9.2.1 General

Single stack systems are designed on the principle that the stack is to be not less than DN 100; however, variations to these requirements are provided for in this Standard.

Single stack systems are also designed on the principle that the air within the discharge pipes from fixtures, the stack and the stack vent allow fixtures to be connected to the stack without the need for individual trap vents or, in the case of ranges of fixtures, venting of the common discharge pipe.

9.2.2 Single stack system

In domestic or residential buildings, fixtures shall be connected to the stack individually or through floor waste gullies.

In commercial or industrial buildings, fixtures may be connected to the stack individually, through floor waste gullies or in ranges of the same type of fixtures.

The maximum number of floor levels through which the stack passes shall be as specified in Clause 9.2.5.

NOTE: For examples of single stack systems, see Figure 9.2.2.

9.2.3 Single stack modified system

The single stack modified system permits stacks to receive a higher discharge loading or to be extended to serve a greater number of floor levels by introducing a relief vent and cross-vents, or by the use of pressure attenuators. Where cross-vents are used, they shall be installed between the relief vent and stack. Where pressure attenuators are used, they shall be installed in accordance with Clause 6.10.

The single stack modified system allows these increases in loading or height without increasing the nominal size of the stack.

The maximum number of floor levels through which the stack passes shall be as specified in Clause 9.2.5.

NOTE: For examples of single stack modified systems, see Figure 9.2.3.

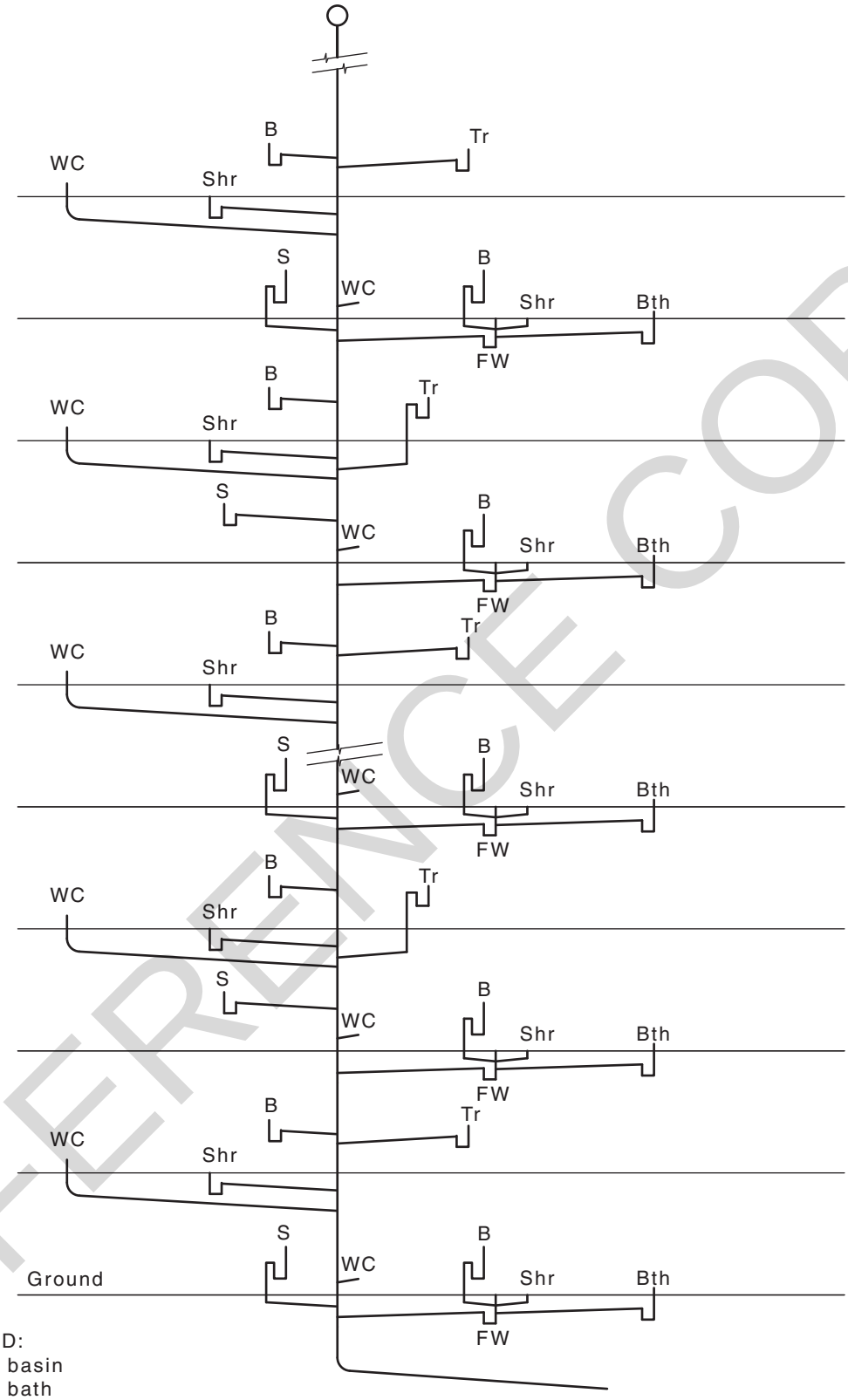

LEGEND:
B = basin
Bth = bath
FW = floor waste
Shr = shower
Tr = trough
WC = water closet

(a) Domestic or residential building
(see Table 9.7.1(A))

FIGURE 9.2.2 (in part) EXAMPLES OF SINGLE STACK SYSTEMS

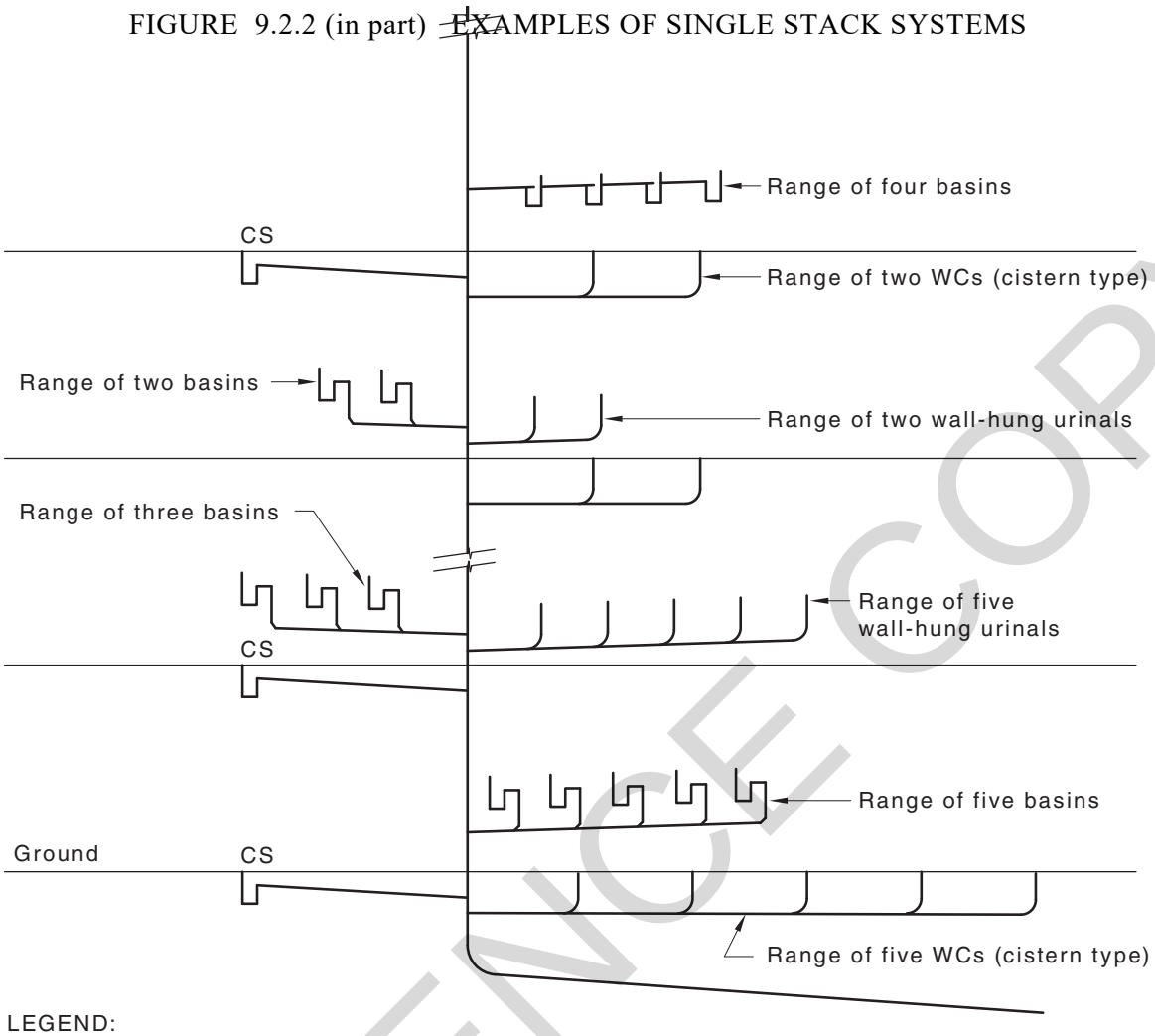

LEGEND:
WC = water closet
CS = cleaner's sink

(b) Commercial or industrial building
(see Table 9.7.1(B))

FIGURE 9.2.2 (in part) EXAMPLES OF SINGLE STACK SYSTEMS

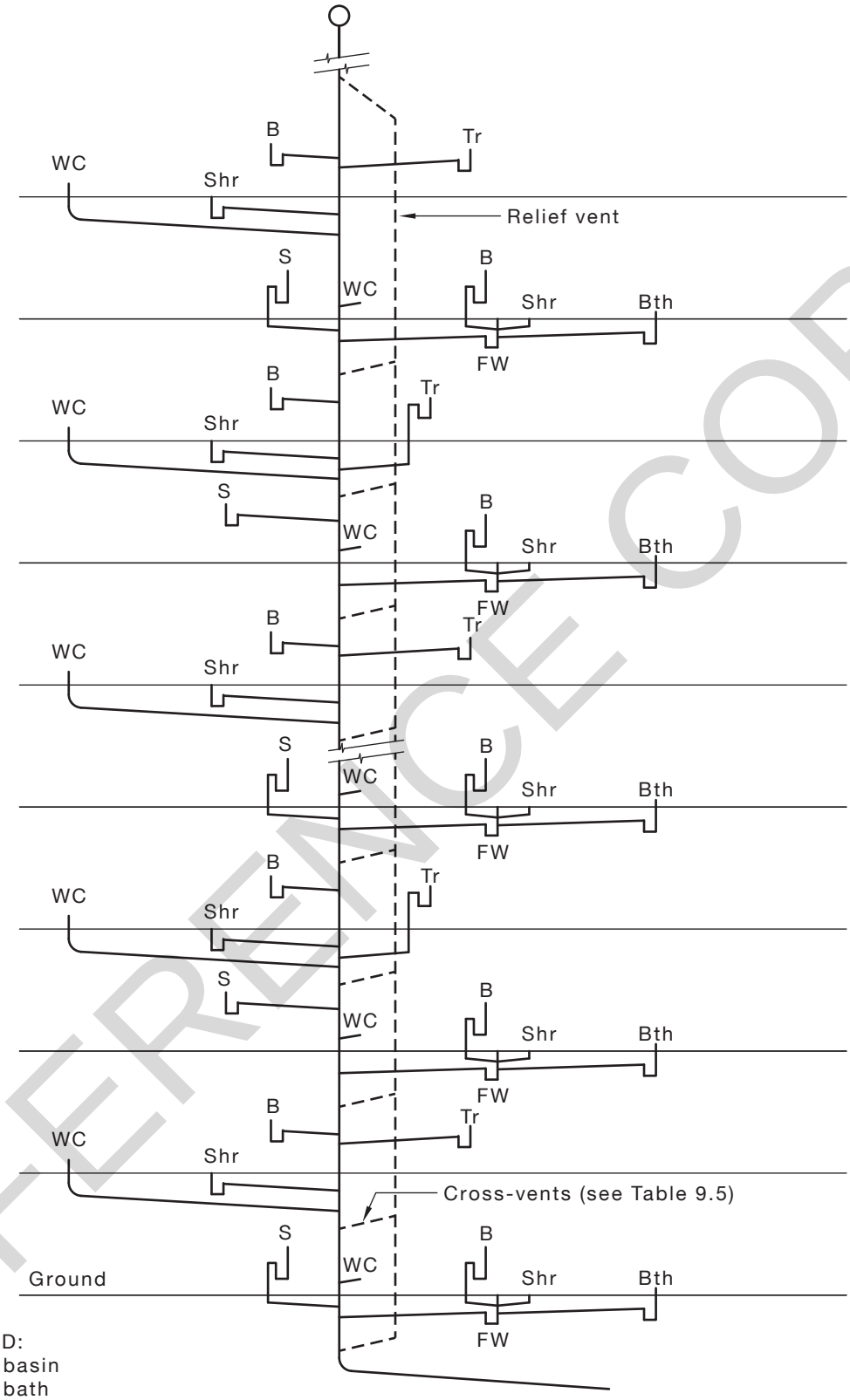

LEGEND:
B = basin
Bth = bath
FW = floor waste
Shr = shower
Tr = trough
WC = water closet

(a) Domestic or residential building
(see Table 9.7.2(A))

FIGURE 9.2.3 (in part) EXAMPLES OF SINGLE STACK MODIFIED SYSTEMS

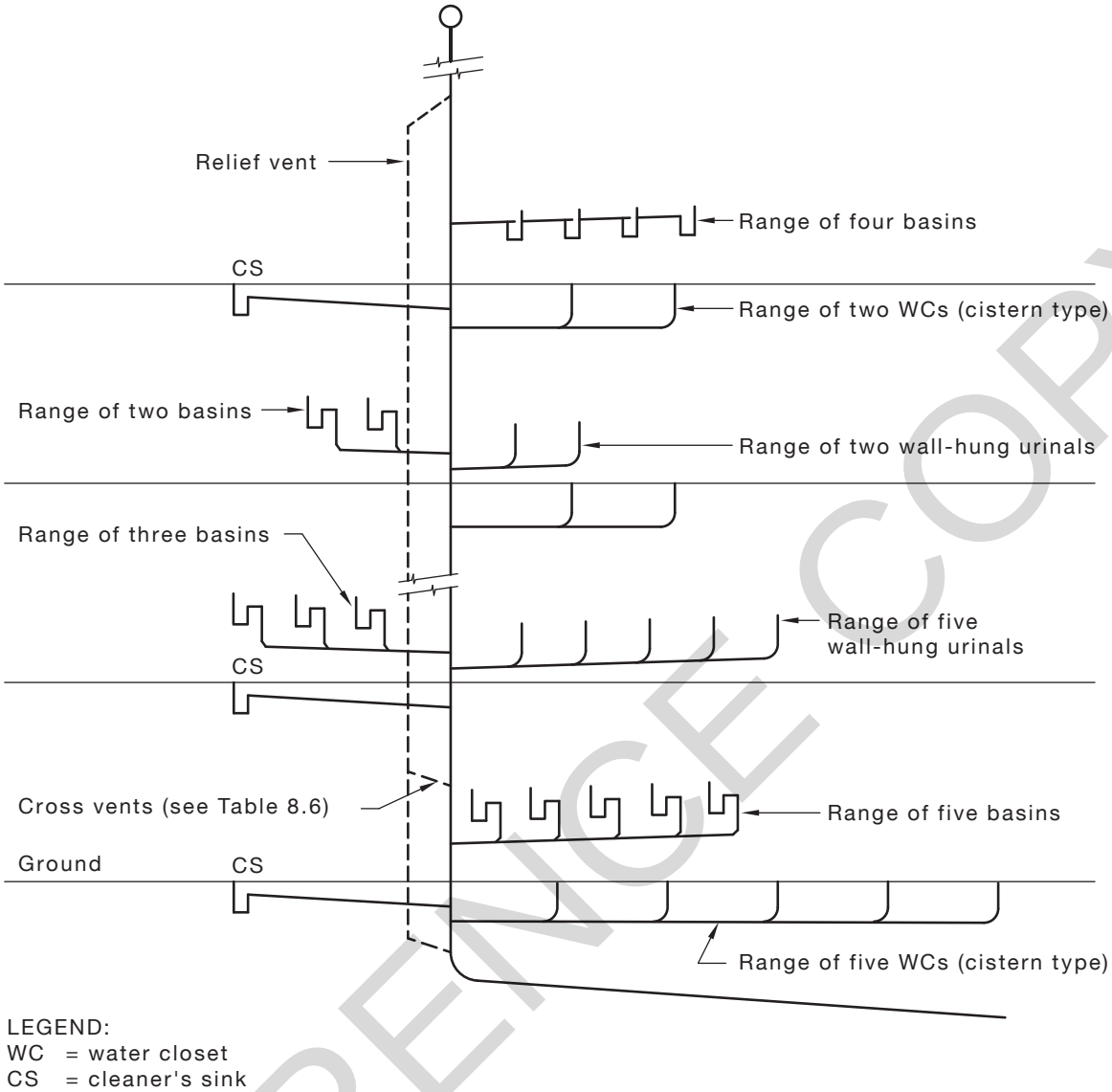

(b) Commercial or industrial building
(see Table 9.7.2(B))

FIGURE 9.2.3 (in part) EXAMPLES OF SINGLE STACK MODIFIED SYSTEMS

9.2.4 Design requirements

When sizing stacks, consideration shall be given to—

(a) the load-production effect of fixtures connected to the stack;

(b) the maximum number of floor levels connected to the stack;

(c) the type of building served; and

NOTE: See Clause 9.7.

(d) whether relief vents and cross-vents are installed.

9.2.5 Number of floor levels

The maximum number of floor levels through which the stack passes, as specified in Tables 9.7.1(A), 9.7.1(B), 9.7.2(A) and 9.7.2(B), shall be counted from the point at which the stack connects to the drain or graded pipe and the highest floor level on which a fixture is connected. Where the distance between the invert of the drain or graded pipe and the lowest floor level exceeds 2.4 m, that floor shall be counted as an additional floor level.

NOTE: For examples of floor number levels, see Figure 9.2.5.

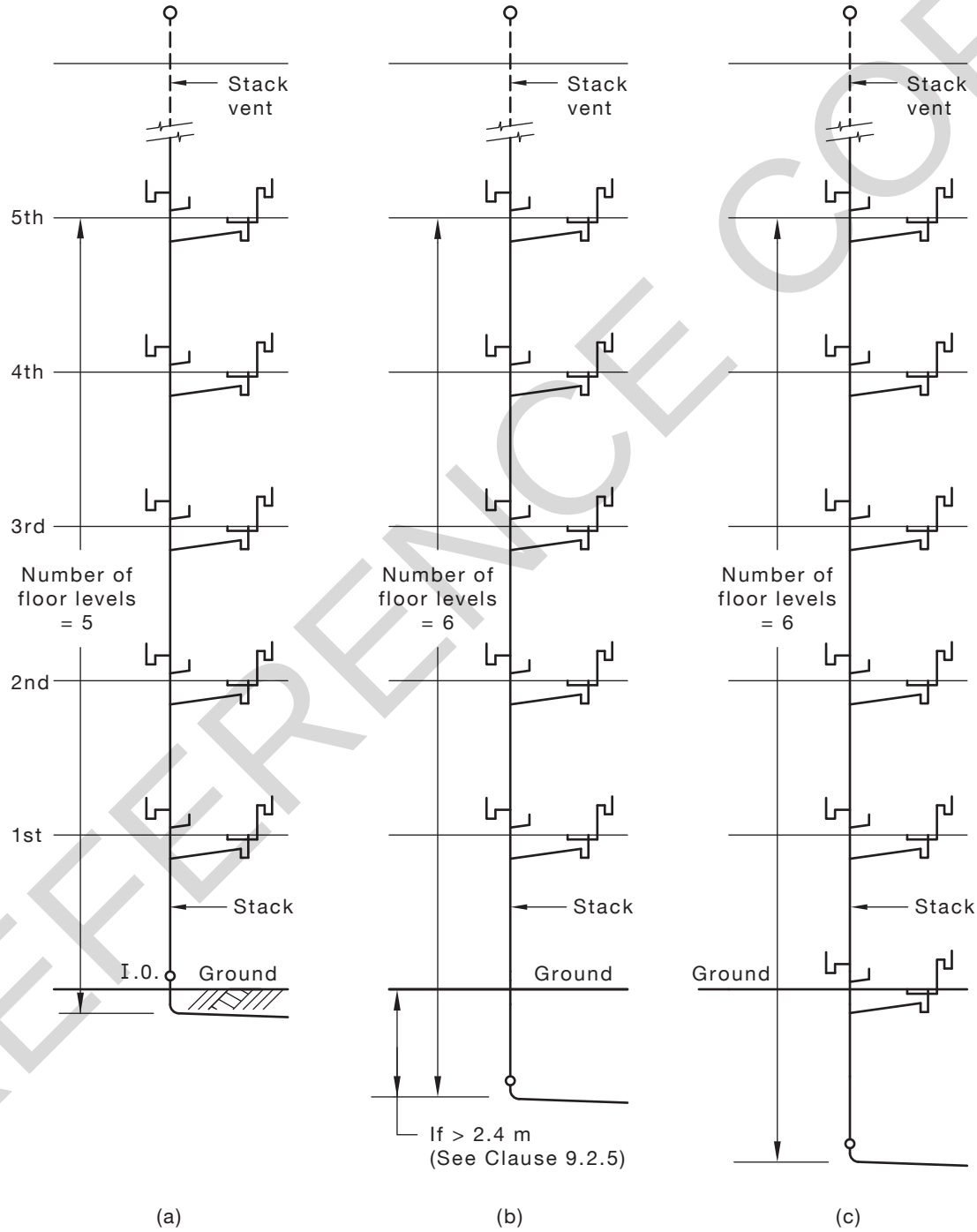

FIGURE 9.2.5 EXAMPLES OF NUMBER OF FLOOR LEVELS

9.3 RATING OF FIXTURES

The fixture unit ratings set out in Table 6.2(A) shall apply to fixtures connected in accordance with this Section.

Where the discharge from plant room equipment is connected to any single stack system, the loading in fixture units shall be determined in accordance with Table 6.2(B).

9.4 FIXTURES TO BE CONNECTED

9.4.1 Domestic or residential buildings

The type and total number of fixtures that may be connected to a single stack from any floor level in a residential building shall not exceed the following:

(a) Two basins.

(b) Two baths.

(c) Two bidets.

(d) Two clothes-washing machines.

(e) Two dishwashing machines.

(f) Two kitchen sinks (double or single domestic with or without food waste disposal units).

(g) Two laundry troughs.

(h) Two showers.

(i) Two water closet pans.

(j) Two floor waste gullies.

(k) Two bar sinks.

NOTE: See also Table 9.7.1(A).

9.4.2 Commercial or industrial buildings

The type and total number of fixtures that may be connected to a single stack from any floor level in a commercial building by fixture discharge pipes, common discharge pipes or ranges of fixtures shall not exceed the following:

(a) For separate pipes—

(i) five basins;

(ii) one cleaner's sink;

(iii) one drinking fountain;

(iv) one sink;

(v) five urinals (wall-hung);

(vi) five water closet pans;

(vii) two showers;

(viii) one 3 m slab type urinal; or

(ix) two bar sinks.

NOTE: See also Table 9.7.1(B).

No additional or alternative fixtures shall be connected except tundishes receiving minor discharges.

At any floor level, the maximum discharge from all floor waste gullies shall not exceed five basins, one drinking fountain, one cleaner's sink and two showers.

NOTE: See Note 3 of Table 6.2(A).

(b) For ranges of fixtures—

(i) five basins;

(ii) five urinals (wall-hung); and

(iii) five water closet pans.

9.5 CONNECTION OF FIXTURES WITHOUT TRAP VENTS

9.5.1 Separate fixture discharge pipes

Each fixture shall be connected to the stack by a separate unvented fixture discharge pipe of a prescribed length, size and grade in accordance with Table 9.5.1, except as allowed in Clause 9.5.2. Where the length of the discharge pipe exceeds that allowed in Table 9.5.1, a trap vent shall be provided in accordance with Clause 8.5.1.

TABLE 9.5.1

FIXTURE DISCHARGE PIPES WITHOUT TRAP VENTS TO STACKS

Fixture DN	Maximum length m	Grade %
Waste fixtures	2.5	2.50 to 5.00
Water closet pans 100	6.0	1.65 to 5.00
80	2.5	1.65 to 5.00
Urinals 50–80	2.5	2.50 to 5.00
100	6.0	1.65 to 5.00

NOTE: For sizes of fixture discharge pipes, see Table 6.2(A).

9.5.2 Acceptable variations

The following variations are acceptable:

(a) Stacks, either straight or with offsets as specified in Clause 8.6, that receive only the discharge from waste fixtures may have unvented fixture discharge pipes installed in accordance with Table 9.5.1.

(b) Stacks without offsets may be sized having a maximum fixture unit loading in accordance with Table 9.5.2.

The requirements of Clause 9.4, whether the stack is straight or with an offset, as regards the maximum number and type of waste fixtures which may be connected to the stack from any floor, level need not apply.

(c) Not more than one-quarter of the maximum loading as shown in Table 9.5.2 may discharge into the stack at any one floor level except where the stack is DN 50 or smaller, or in accordance with Clause 9.8.9.

(d) Fixture discharge pipes jointed together close to the stack may be installed in accordance with Clause 9.5.6.

(e) Fixture discharge pipes connected to a stack by means of a short vertical pipe may connect to the stack in accordance with Clause 9.5.7 and Figure 6.6.3.2(b).

(f) For stacks of sizes between DN 65 and DN 100 only, two fixtures of the same type (fixture pairs) may jointly discharge to the common fixture trap and fixture discharge pipe in accordance with Clause 6.4.4.

(g) For stacks of sizes between DN 100 and DN 150 only, fixtures of the same type (ranges of fixtures in commercial-type buildings) that separately discharge to a common discharge pipe may be in accordance with Clause 9.5.10.

TABLE 9.5.2

SIZE OF WASTE STACK

Size of stack DN	Maximum fixture unit loading
40	2
50	6
65	15
80	30
100	120

9.5.3 Opposed junctions

The size and location of junctions between discharge pipes and the discharge stack designed to prevent cross-flow and water seal siphonage shall ~~comply~~ conform with Clause 6.6.3.

9.5.4 Bends in fixture discharge pipes

The number of bends in a fixture discharge pipe shall ~~comply~~ conform with the following:

(a) Other than the discharge pipes from basins and bidets, not more than two bends in the horizontal plane and three bends in the vertical plane shall be allowed.

(b) Each basin and bidet shall have not more than two bends in the horizontal plane and two bends in the vertical plane.

(c) For the purpose of this Clause, a bend of 45° or less shall not be considered as a change in direction or grade.

9.5.5 Vertical dropper on fixture discharge pipes

The maximum length of a vertical dropper on any fixture discharge pipe shall be 2.5 m, except for basins and bidets where it shall be 1.5 m.

9.5.6 Connection from waste fixtures to stack

Two fixture discharge pipes, including discharge pipes from floor waste gullies, receiving the discharge from waste fixtures may connect to the stack within a distance of 1 m by means of a 45° junction, provided—

(a) the angle between the two fixture discharge pipes is not greater than 45°;

(b) the outlet of the junction is one size larger than the largest fixture pipe, except for a floor waste gully that does not receive the discharge from a fixture; and

(c) the section of pipe downstream of the 45° junction is included as part of the maximum length of the fixture discharge pipe.

NOTE: For a diagram of the above, see Figure 9.5.6.

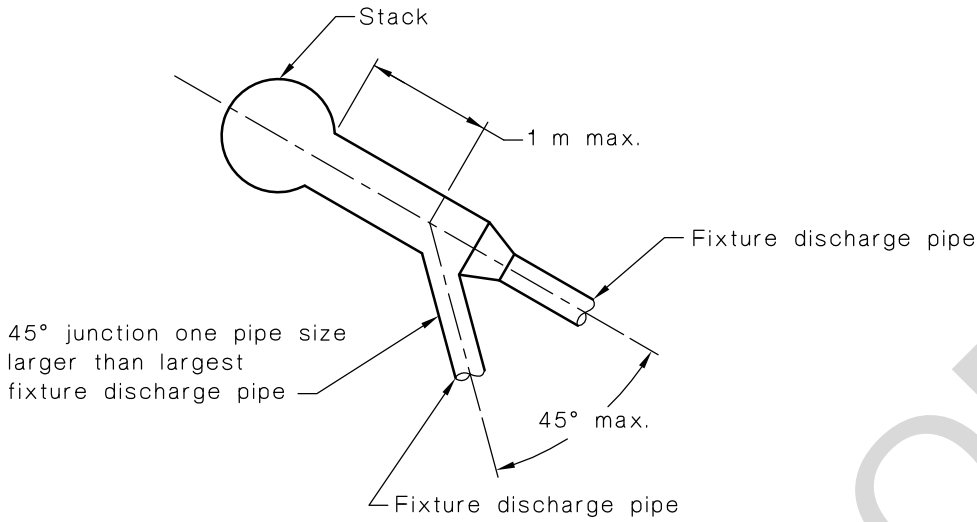

FIGURE 9.5.6 UNEQUAL STACK JUNCTION

9.5.7 Connection from waste fixtures to stack below restricted zone

Fixture discharge pipes, including those from floor waste gullies, may be connected immediately below the restricted zone vertical depth by means of a short vertical drop adjacent to the stack [see Table 6.6.3.2 and Figure 6.6.3.2(b)].

9.5.8 Floor waste gullies

Floor waste gullies shall be installed in accordance with Clause 4.6.7.

9.5.9 Traps

Traps shall be installed in accordance with Clause 6.4.

9.5.10 Connection of ranges of fixtures

A range of fixtures of the same type in commercial buildings may discharge through a common discharge pipe without venting. The junction at the point of connection between a fixture discharge pipe and the common discharge pipe shall be a 45° or sweep junction.

9.5.11 Ranges of basins

9.5.11.1 *General*

The maximum number of basins shall be five, as given in Figure 9.5.11.1.

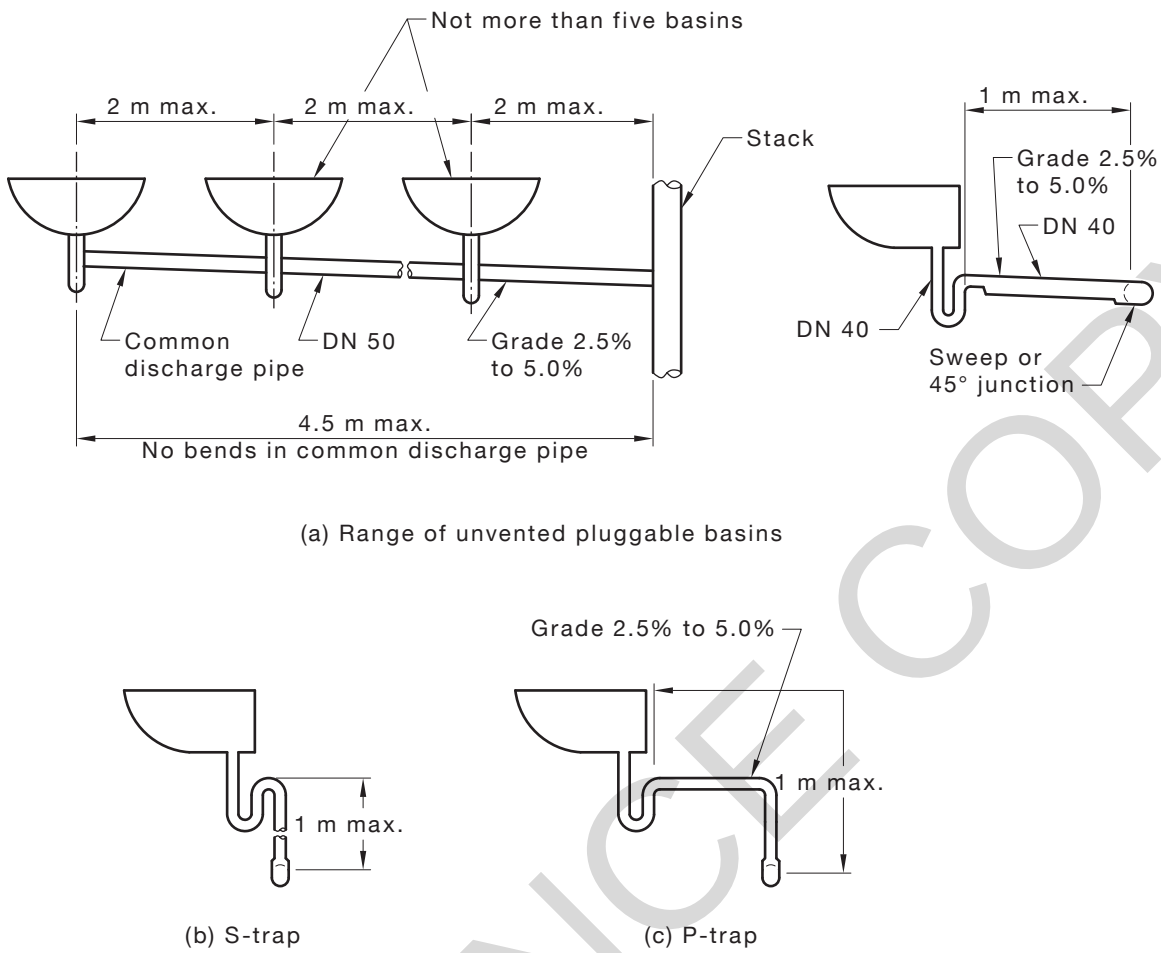

FIGURE 9.5.11.1 CONNECTION OF BASINS

9.5.11.2 *Fixture discharge pipe*

The fixture discharge pipe from each basin to the point of connection to the common discharge pipe shall be—

(a) DN 40;

(b) not longer than 1 m;

(c) installed with not more than one bend; and

(d) graded within the range of 2.5% to 5%.

9.5.11.3 *Common discharge pipe*

The common discharge pipe shall be—

(a) not smaller than DN 50;

(b) not longer than 4.5 m;

(c) installed without a bend; and

(d) graded within the range of 2.5% to 5%.

9.5.11.4 *Spacing of traps*

The distance between the centre-lines of adjacent traps and between the near face of the stack and the centre-line of the nearest trap shall not exceed 2 m.

9.5.12 Range of water closet pans

9.5.12.1 *General*

The maximum number of water closet pans shall be five, as shown in Figure 9.5.12.1.

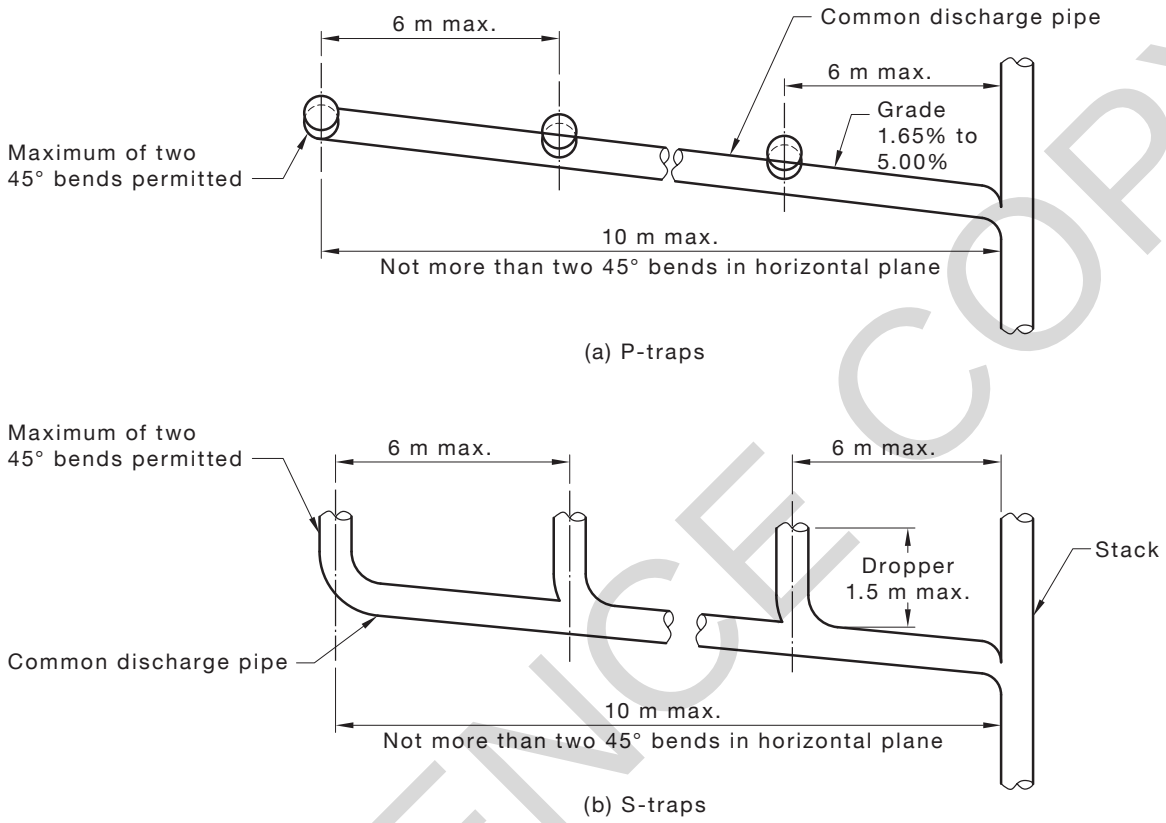

FIGURE 9.5.12.1 CONNECTION OF WATER CLOSET PANS

9.5.12.2 *Fixture discharge pipe*

The fixture discharge pipe from each water closet pan to the point of connection to the common discharge pipe shall be—

(a) not longer than 1.5 m for S-trap pans and 2 m for P-trap pans;

(b) installed with a maximum of two bends; and

(c) graded within the range of 1.65% to 5%.

9.5.12.3 *Common discharge pipes*

The common discharge pipe shall be—

(a) not smaller than DN 100;

(b) not longer than 10 m;

(c) installed with not more than two bends; and

(d) graded within the range of 1.65% to 5%.

9.5.12.4 *Spacing of traps*

The distance between the centre-lines of adjacent traps and the near face of the stack and the centre-line of the nearest connected trap shall not exceed 6 m.

9.5.13 Range of wall-hung urinals

9.5.13.1 *General*

The maximum number of wall-hung urinals shall be five, as shown in Figure 9.5.13.1.

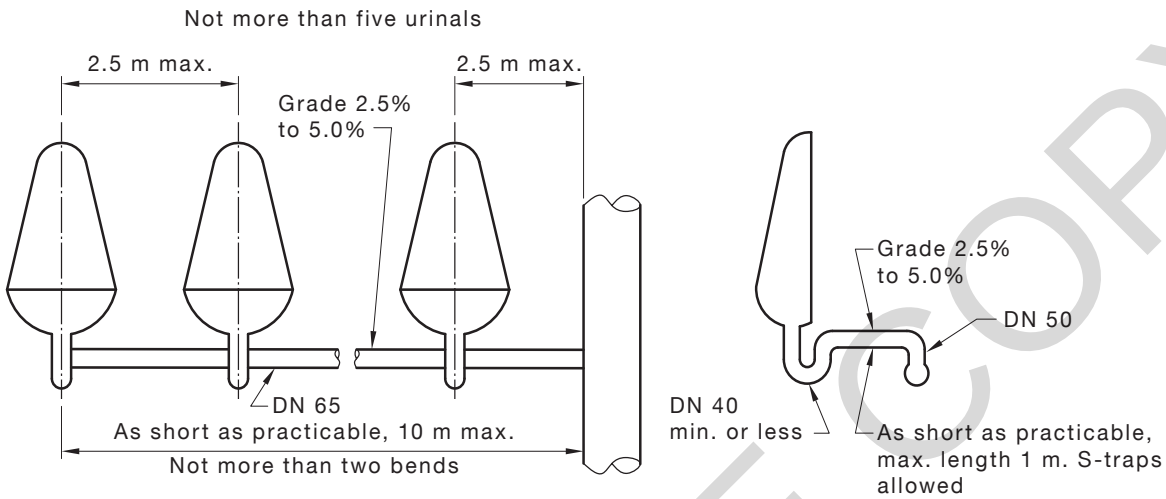

FIGURE 9.5.13.1 CONNECTION OF WALL-HUNG URINALS

9.5.13.2 *Fixture discharge pipe*

The discharge pipe from each urinal to the point of connection to the common discharge pipe shall be—

(a) DN 50;

(b) not longer than 1 m;

(c) installed with not more than one bend; and

(d) graded within the range of 2.5% to 5%.

9.5.13.3 *Common discharge pipe*

The common discharge pipe shall be—

(a) not smaller than DN 65;

(b) not longer than 10 m;

(c) installed with not more than two bends; and

(d) graded within the range of 2.5% to 5%.

9.5.13.4 *Spacing of traps*

The distance between the centre-lines of adjacent traps and the near face of the stack and the centre-line of the nearest connected trap shall not exceed 2.5 m.

9.6 VENTING OF STACKS

9.6.1 General

The stack shall continue to the vent cowl undiminished in size.

Stacks that extend not more than three floor levels with a maximum loading of 30 fixture units may have the vent reduced to DN 50.

9.6.2 Cross-vents (single stack modified system)

9.6.2.1 *General*

Cross-vents shall interconnect the stack with the relief vent. Cross-vents shall be installed commencing on the lowest floor level served and then from other floors as given in Table 9.7.2(A) or Table 9.7.2(B) as applicable.

NOTE: A cross-vent need not be fitted above the highest fixture connected to the stack.

9.6.2.2 *Installation*

The following applies to cross-vents:

(a) The cross-vent shall connect to the stack at a height of not less than 50 mm or more than 600 mm above the flood level rim of the highest fixture connected to the stack at the floor concerned. The connection between the cross-vent and stack shall be at an angle of entry of 45°, and the cross-vent shall be extended upwards at 45° to the point of connection with the relief vent.

(b) The cross-vent may be omitted, provided a vent is connected to the highest graded pipe that receives the discharge from a water closet pan at the floor concerned, at a point that is as close to the stack as is practicable. The vent shall be connected to the soffit of the graded pipe, and shall be extended upwards to a height of not less than 50 mm above the flood level rim of the water closet pan served, before interconnecting with the relief vent.

(c) Where there is no water closet pan connected at the floor concerned, the vent shall connect into the highest graded pipe on that floor, provided the graded pipe is not less than DN 80 at the point of connection to the vent.

(d) Changes of direction and junctions or connections shall be made using methods detailed in this Standard.

9.6.3 Relief vents (single stack modified system)

Relief vents shall be installed in accordance with Clause 8.5.3.

9.7 SIZING OF STACKS

9.7.1 Single stack systems

Stacks shall be sized using the individual fixture unit ratings as given in Table 6.2(A), and shall be as given in Table 9.7.1(A) or Table 9.7.2(B), as appropriate.

TABLE 9.7.1(A)

SINGLE STACK SYSTEMS—DOMESTIC OR RESIDENTIAL BUILDINGS~~[see Figure 9.2.2(a)]~~

Size of stack DN	Maximum fixture unit loading	Maximum number of consecutive floor levels
100	260	10
125	390	15
150	780	30

NOTE: See Figure 9.2.2(a).

TABLE 9.7.1(B)

SINGLE STACK SYSTEMS—COMMERCIAL OR INDUSTRIAL BUILDINGS~~[see Figure 9.2.2(b)]~~

Size of stack DN	Maximum fixture unit loading	Maximum number of consecutive floor levels
100	60	4
125	100	6
150	200	8

NOTE: See Figure 9.2.2(b).

9.7.2 Single stack modified systems

Stacks shall be sized using the individual fixture unit ratings as specified in Table 6.2(A), and shall be as given in Table 9.7.2(A) or Table 9.7.2(B), as appropriate.

TABLE 9.7.2(A)

SINGLE STACK MODIFIED SYSTEMS—DOMESTIC OR RESIDENTIAL BUILDINGS~~[see Figure 9.2.3(a)]~~

Size of stack DN	Maximum fixture unit loading	Number of consecutive floor levels	Size of relief vent and cross-vent DN	Location of cross-vents
100	290	up to 15	50	Alternate floors
100	390	up to 15	50	Each floor
100	320	16 to 20	65	Alternate floors
100	500	16 to 20	65	Each floor

NOTE: See Figure 9.2.3(a).

TABLE 9.7.2(B)

SINGLE STACK MODIFIED SYSTEMS—OTHER THAN RESIDENTIAL TYPE BUILDINGS~~[see Figure 9.2.3(b)]~~

Size of stack DN	Maximum fixture unit loading	Number of consecutive floor levels	Size of relief vent and cross-vent	Location of cross-vents
100	120	5 to 12	50	Each floor
125	250	13 to 18	65	Each floor
150	600	19 to 24	80	Each floor

NOTE: See Figure 9.2.3(b).

9.8 VARIATIONS TO SINGLE STACK SYSTEMS

9.8.1 General

The following variations to the requirements of this Section may be used:

NOTE: The variations are actual installations that have been subjected to performance testing.

(a) A DN 80 stack up to three floors in height for domestic or residential buildings may have variations as detailed in Clause 9.8.2.

(b) A DN 80 stack up to two floors in height with top section graded (nominally horizontal) may have variations as detailed in Clause 9.8.3.

(c) A DN 100 stack up to three floors in height with top section graded (nominally horizontal), receiving a maximum discharge of 30 fixture units, may have variations as detailed in Clause 9.8.4.

(d) A DN 100 stack of one floor in height with top section graded (nominally horizontal), receiving a maximum discharge of 90 fixture units, may have variations as detailed in Clause 9.8.5.

(e) Connection of multiple fixtures located on the floor above a graded offset to a common branch pipe, which connects into or below the offset in a stack of not less than DN 100, may be ~~made in accordance~~ applied with Clause 9.8.6.

(f) A waste stack up to DN 100, with graded offset between the highest and lowest connections, may have variations as detailed in Clause 9.8.7.

(g) A DN 65 waste stack up to two floors in height, receiving the discharge from kitchen sinks and laundry troughs, may have variations as detailed in Clause 9.8.8.

(h) Connection of waste fixtures to DN 50 stack vent in DN 80 and DN 100 stacks may be ~~made in accordance~~ applied with Clause 9.8.9.

~~(i)~~Trap vent required on fixtures, connected at the change of direction in a DN 80 or DN 100 stack with top section nominally horizontal, ~~is to~~ shall be installed in accordance with Clause 9.8.10.

In areas where foaming is likely to occur, the minimum distance at or near the offsets may need to be increased.

9.8.2 DN 80 stack

A stack of DN 80, serving not more than three floor levels in domestic or residential buildings, may receive discharge pipes provided the installation ~~complies~~ conforms with the following:

(a) The stack shall not exceed three floor levels in height measured between the base of the stack and the highest floor level upon which a fixture is connected to the stack.

(b) The stack loading shall not exceed 30 fixture units.

(c) Not more than one fixture of each of the following types listed shall discharge into the stack at each floor level:

(i) Basin.

(ii) Bath.

(iii) Dishwashing machine.

(iv) Kitchen sink.

(v) Shower.

(d) A laundry trough or clothes-washing machine shall not be connected to the stack.

(e) Each fixture shall discharge into the stack by means of an individual fixture discharge pipe.

(f) The stack shall be straight between the discharge pipe of the highest fixture connected and the drain, and have no offset or other deviation from the vertical.

(g) The graded section of the drain to which the base of the stack connects shall be not smaller than DN 100.

(h) Offsets shall only be installed in the stack vent above the highest branch connection to the stack.

NOTE: The offsets should preferably be greater than 45° (steep offsets).

9.8.3 DN 80 stack with the top section graded and installed in a domestic or residential building

A stack of DN 80, serving not more than two floor levels with the top section graded nominally horizontal, may receive the discharge from fixtures without vents on the fixture discharge pipes, provided the installation ~~complies~~ conforms with the following:

(a) Fixtures shall discharge to the graded section by means of an individual fixture discharge pipe.

(b) Not more than one of each of the following fixtures shall discharge to the graded section:

  (i) Bath.

  (ii) Basin.

  (iii) Dishwashing machines.

  (iv) Kitchen sink.

  (v) Shower.

(c) A laundry trough or clothes-washing machine shall not be connected to the stack.

(d) Fixtures shall not be connected to the lower vertical section of the stack.

(e) The connection of a fixture discharge pipe to the graded section of a stack shall be not less than 450 mm from the lower vertical section of the stack, measured from the inlet of the lower bend commencing the graded section.

The graded section of the stack may be reduced in size along its length towards the vent, according to the size of individual fixture discharge pipes connected to it.

In no case shall the graded section or vent be smaller than DN 50.

NOTE: For typical DN 80 stack with the top section graded and installed in a domestic or residential building, see Figure 9.8.3.

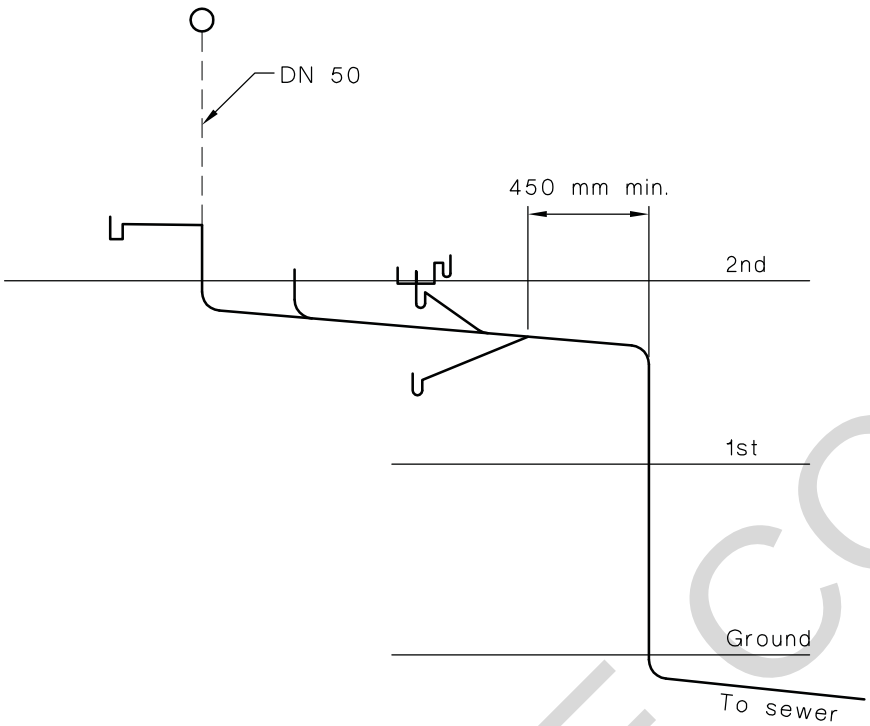

FIGURE 9.8.3 TYPICAL DN 80 STACK UP TO TWO FLOOR LEVELS WITH TOPMOST SECTION NOMINALLY HORIZONTAL

9.8.4 DN 100 stack up to three floors with the top section graded and installed in a domestic or residential building receiving 30 fixture units

A stack of DN 100, serving not more than three floor levels with the top section graded nominally horizontal in a domestic or residential building, may receive the discharge from fixtures without vents on the fixture discharge pipes, provided the installation ~~complies~~ conforms with the following:

(a) Fixtures shall discharge to the graded section by means of individual fixture discharge pipes.

(b) The stack shall not exceed three floor levels in height and the stack loading shall not exceed 30 fixture units.

(c) The connection of a fixture discharge pipe to the graded section of the stack shall be not less than 450 mm from the lower vertical section of the stack, measured from the inlet of the lower bend commencing the graded section.

The graded section of the stack may be reduced in size along its length towards the vent according to the size of the individual fixture discharge pipe connected to it.

In no case shall the graded section or vent be smaller than DN 50.

NOTE: For a DN 100 stack up to three floors with the top section graded and installed in a domestic or residential building receiving 30 fixture units, see Figure 9.8.4.

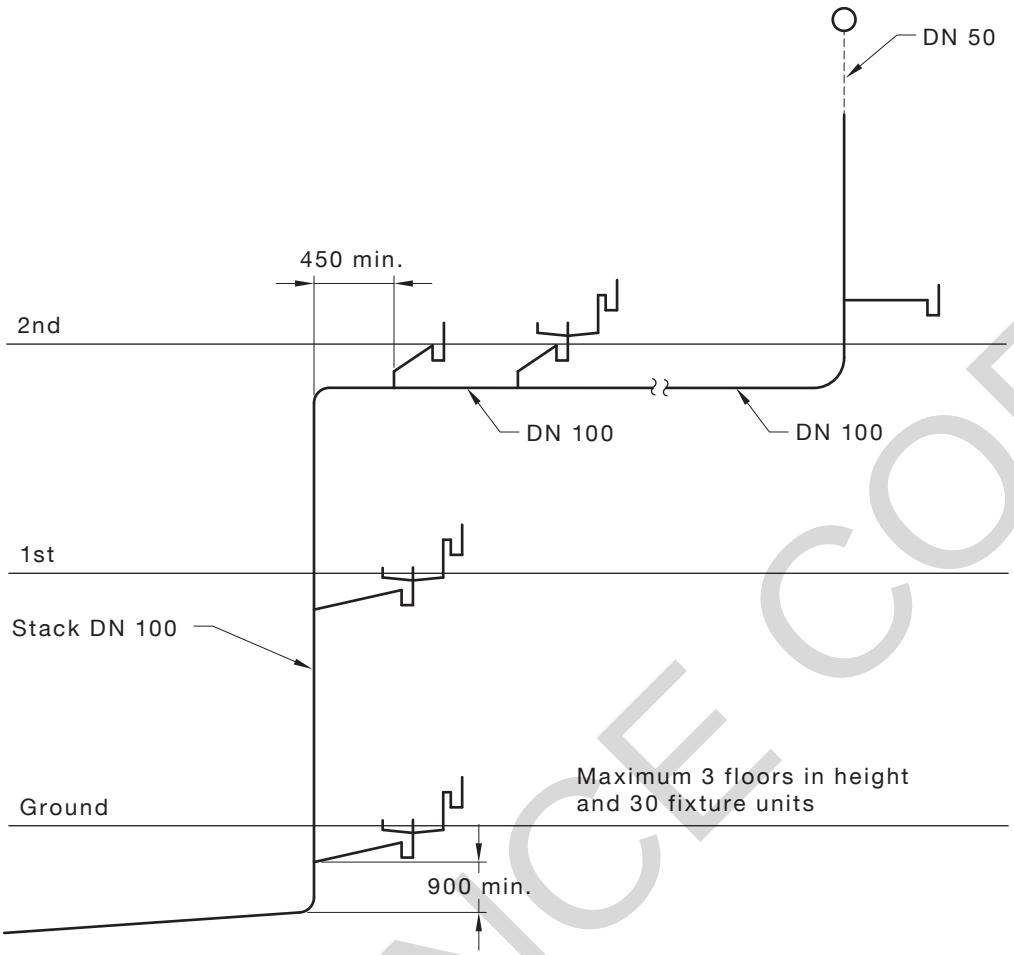

NOTE: Size of graded section may vary to a minimum DN 50.

DIMENSIONS IN MILLIMETRES

FIGURE 9.8.4 TYPICAL DN 100 STACK WITH TOPMOST SECTION NOMINALLY HORIZONTAL

9.8.5 DN 100 stack of one floor with top section graded

A stack of DN 100 serving the first floor above ground level in a domestic or residential building may receive the discharge from fixtures without vents on the fixture discharge pipes, provided the installation ~~complies~~ conforms with the following:

(a) Fixtures shall discharge to the graded section by means of individual fixture discharge pipes.

NOTE: See also Table 9.5.1.

(b) The stack loading shall not exceed 90 fixture units.

(c) The connection of a fixture discharge pipe to the graded section of the stack shall be not less than 450 mm from the lower vertical section of the stack, measured from the inlet of the lower bend commencing the graded section.

(d) Branches shall not be connected to the vertical sections of the stack within 600 mm below the lower bend forming part of the offset. The graded section of the stack may be reduced in size along its length towards the vent, according to the size of individual fixture discharge pipes connected to it. In no case shall the graded section or vent be smaller than DN 50.

NOTE: For a typical DN 100 stack of one floor with top section graded, see Figure 9.8.5.

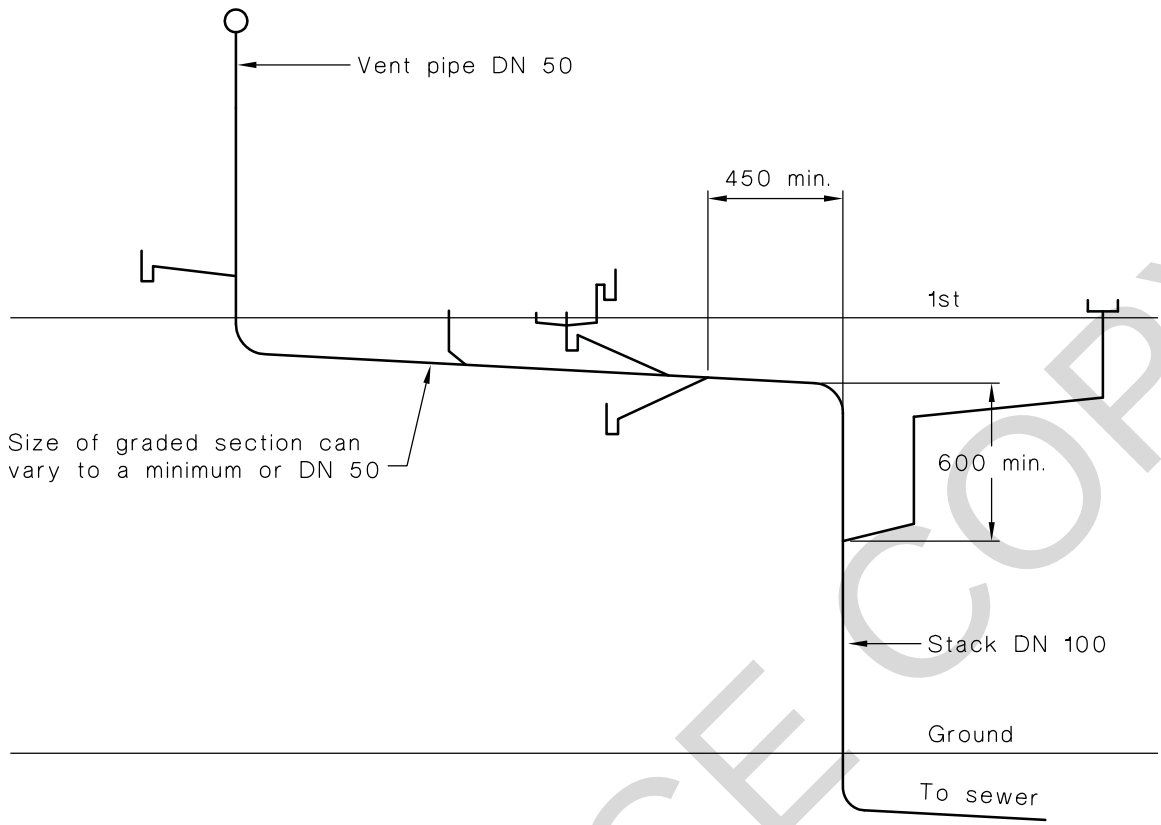

DIMENSIONS IN MILLIMETRES

FIGURE 9.8.5 TYPICAL DN 100 STACK WITH TOPMOST SECTION NOMINALLY HORIZONTAL FOR ONE FLOOR—90 FIXTURE UNITS

9.8.6 Connection for multiple fixtures into or below a graded offset (DN 100 stacks)

Multiple fixtures located on the floor above a graded offset may be connected by means of a common discharge pipe into or below the graded section of the offset in accordance with Clause 8.6.2, provided the stack to which the branch pipe connects does not exceed—

(a) five floors above the graded offset with a maximum loading of 90 fixture units; or

(b) three floors above the graded offset with a maximum loading of 45 fixture units.

NOTE: For a diagram of the above, see Figure 9.8.6.

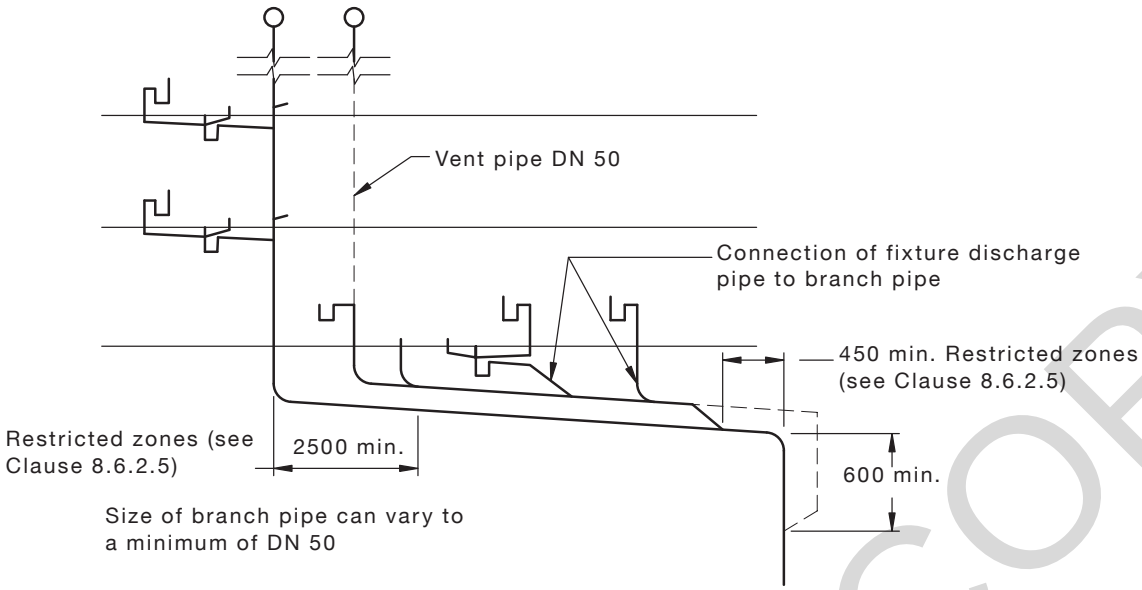

DIMENSIONS IN MILLIMETRES

FIGURE 9.8.6 MULTIPLE FIXTURE BRANCH

9.8.7 Waste stack up to DN 100 with either graded or steep offset between the highest and lowest connections

9.8.7.1 *Graded offsets*

A waste stack up to DN 100 may have graded offsets installed between the highest and lowest graded pipes, provided the following requirements are met:

(a) The maximum fixture unit loading to discharge through the graded section of the offset shall be as given in Table 9.8.7.1(A).

(b) The distance between the centre-lines of the vertical sections of a stack each side of the graded offset shall be not less than 1 m.

(c) For stacks DN 80 or smaller, no branch shall connect to the stack within 900 mm above the upper offset bend.

A DN 80 stack with offset may have the minimum vertical distance of 900 mm reduced to 600 mm, provided the height between the highest connection to the stack and the upper offset bend does not exceed three floor levels.

(d) For DN 100 stacks only, the connection near the upper offset bend shall be in accordance with Table 9.8.7.1(B).

(e) Where connections are made to the stack below the offset, the size of the offset and the stack above the offset and up to the vent cowl shall be as determined from Table 9.8.7.1(A). The fixture unit loading for the complete stack shall be determined from Table 9.5.2. The stack size shall be the greater value, determined from Tables 9.5.2 and 9.8.7.1(A).

(f) Branches shall not connect to the vertical sections of the stack within 600 mm below the lower bend forming part of the offset.

(g) Where no connections are made to the stack below the offset, the maximum fixture unit loading to discharge through the offset shall be as given in Table 9.5.2 for the upper vertical section and the offset shall be increased to the next larger size.

(h) The connection of multiple fixtures into the offset shall be in accordance with Clause 9.8.6.

(i) Where unvented fixtures are connected into the graded section, the fixture discharge pipe shall ~~comply~~ conform with Table 9.5.1.

(j) Where a common discharge pipe is connected into the stack, and a relief vent and cross-vents are installed, the fixture loading discharging to the stack shall be as given in Table 8.2.2(B).

NOTE: For a typical example of waste stack up to DN 100 with graded offset between the highest and lowest connections, see Figure 9.8.7.1.

TABLE 9.8.7.1(A)

WASTE STACKS—LOADING THROUGH GRADED OFFSETS

Size of graded section of offset DN	Maximum fixture unit loading permitted through the offset
40	1
50	3
65	8
80	24
100	60

TABLE 9.8.7.1(B)

OFFSET REQUIREMENTS FOR DN 100 WASTE STACKS

Max. height in consecutive floor levels above upper offset bend	Min. distance between upper offset bend and connection of fixture and discharge pipe~~,~~ mm	Max. fixture unit loading (see Table 9.9.3)
5	450	60
10	600	60

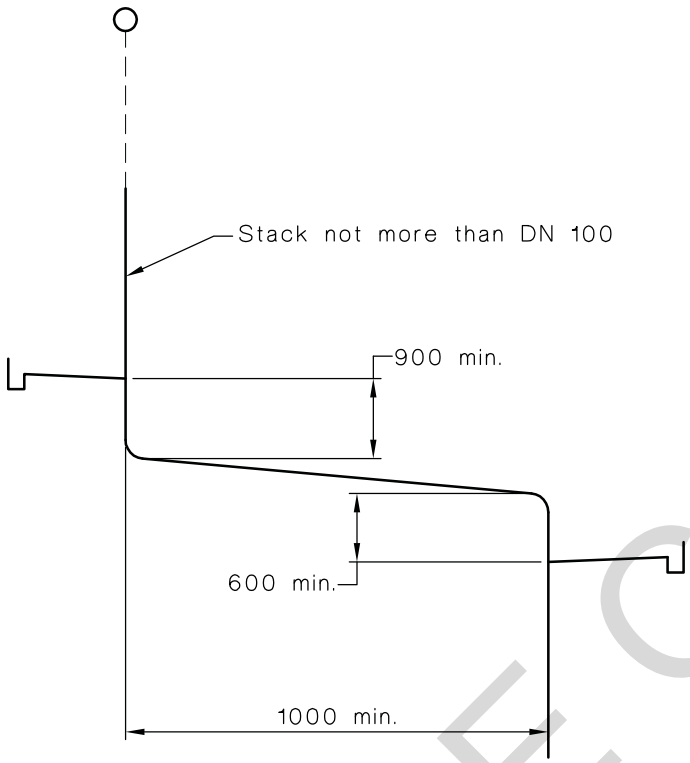

NOTE: For fixture units discharging through graded section, see Table 9.8.7.1(A).

DIMENSIONS IN MILLIMETRES

FIGURE 9.8.7.1 TYPICAL WASTE STACK UP TO DN 100 WITH GRADED OFFSET BETWEEN THE HIGHEST AND LOWEST CONNECTIONS

9.8.7.2 *Steep offsets*

A waste stack of up to DN 100 may have steep offsets between the highest and lowest graded pipes connected, provided the following requirements are met:

(a) Where the fixtures are unvented in accordance with Item (g), the maximum fixture unit loading to discharge to the stack shall not exceed 120 fixture units.

(b) Steep offsets of 60° or more to the horizontal shall have no connections made above the offset within—

(i) 450 mm of the upper bend, when the stack extends through five floors or less above the offset; or

(ii) 600 mm of the upper bend, when the stack extends through more than five floors above the offset.

(c) Steep offsets of less than 60° to the horizontal shall have no connections made above the offset within 150 mm of the upper bend for stacks of any height.

(d) Steep offsets of less than 60° to the horizontal shall have no connections made into the offset within—

(i) 2.5 m of the upper bend; or

(ii) 450 mm of the lower bend.

(e) Steep offsets of 60° or more to the horizontal shall have no restrictions within the offset, provided any such connection is made using a 45° or sweep junction.

(f) Steep offsets shall have no connections made below the offset within 600 mm of the lower bend.

(g) Where unvented single waste fixture discharge pipes are connected into the stack, the maximum length shall be in accordance with Table 9.5.1.

(h) Where a common discharge pipe is connected into the stack and a relief vent is installed, the fixture unit loading discharging to the stack shall be in accordance with Table 8.2.2(B).

9.8.8 DN 65 waste stack

A waste stack of DN 65 may receive the discharge from kitchen sinks and laundry troughs provided—

(a) the stack does not exceed two floor levels in height measured between the base of the stack and the highest floor level upon which a fixture is connected; and

(b) not more than two kitchen sinks, or one kitchen sink and one laundry trough, are separately connected at each floor level.

9.8.9 DN 50 vertical section of stack

Three waste fixtures only, being basins, showers or kitchen sinks, may be connected to the top DN 50 vertical section of a stack not more than three floor levels in height with a maximum loading of 30 fixture units.

NOTE: For a typical connection of a DN 50 vertical section of stack, see Figure 9.8.9.

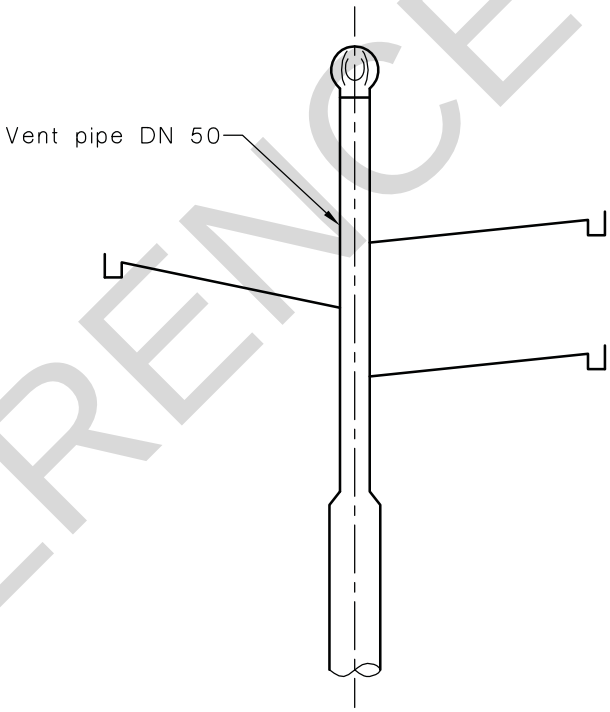

FIGURE 9.8.9 TYPICAL CONNECTION OF WASTE FIXTURES TO A DN 50 VERTICAL SECTION OF STACK

9.8.10 Connection at the change of direction in stack with top section graded

Where a DN 80 or DN 100 stack has the top section nominally horizontal, a trap vent or air admittance valve shall be required on a fixture discharge pipe that connects to the stack at the point at which the top graded section joins the vertical section of the stack.

NOTE: For a typical venting for fixture connected at change of direction in DN 80 or DN 100 stack, see Figure 9.8.10.

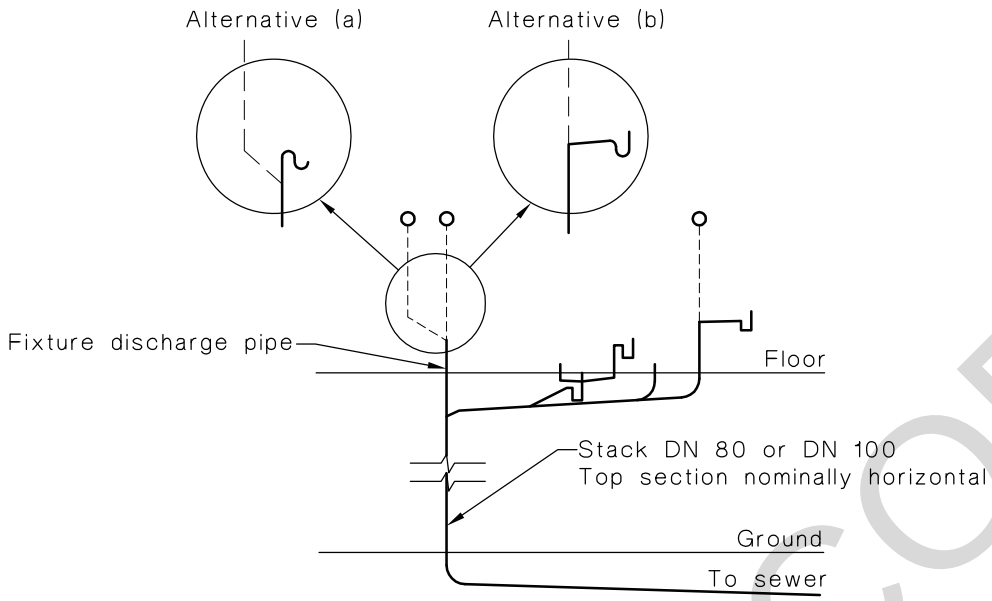

FIGURE 9.8.10 TYPICAL VENTING FOR FIXTURE CONNECTED AT CHANGE OF DIRECTION IN DN 80 OR DN 100 STACKS

9.9 OFFSETS IN SINGLE STACK SYSTEMS ONLY

9.9.1 General

Offsets may be used in single stack design. An offset may be either—

(a) a steep offset made at an angle of ~~more than~~ 45° to the horizontal or greater; or

(b) a graded offset made at an angle of less than 45° to the horizontal, the minimum grade which shall be 2.5% for waste stacks of DN 80 or smaller and 1.65% for stacks of DN 100 or larger.

9.9.2 Steep offsets

DN 100 stacks may be offset between the base of the stack and the highest connection in accordance with the following:

(a) The height of the stack shall not exceed 10 consecutive floor levels.

(b) Laundry troughs shall only be connected to the stack as specified in Clause 9.9.3, except as provided in Clause 9.9.4.

(c) Connections near the upper and lower offset bends and the maximum fixture unit loading to the stack shall be in accordance with Table 9.9.2, except as provided in Clause 9.9.4.

(d) The minimum distance between the connection of any fixture discharge pipe and the upper offset bend shall be no less than 100 mm, as shown in Figure 9.9.2(B).

NOTE: A typical steep offset is depicted in Figure 9.9.2(A).

TABLE 9.9.2
OFFSET REQUIREMENTS

Maximum height in consecutive floor levels above upper offset bend	Minimum distance between upper offset bend and connection of fixture discharge pipe~~,~~ mm	Minimum distance between lower offset bend and connection of fixture discharge pipe~~,~~ mm	Maximum fixture unit loading
5	450	600	90
10	600	600	150
10	900	600	260

NOTE: See also Table 9.9.3 for laundry troughs.

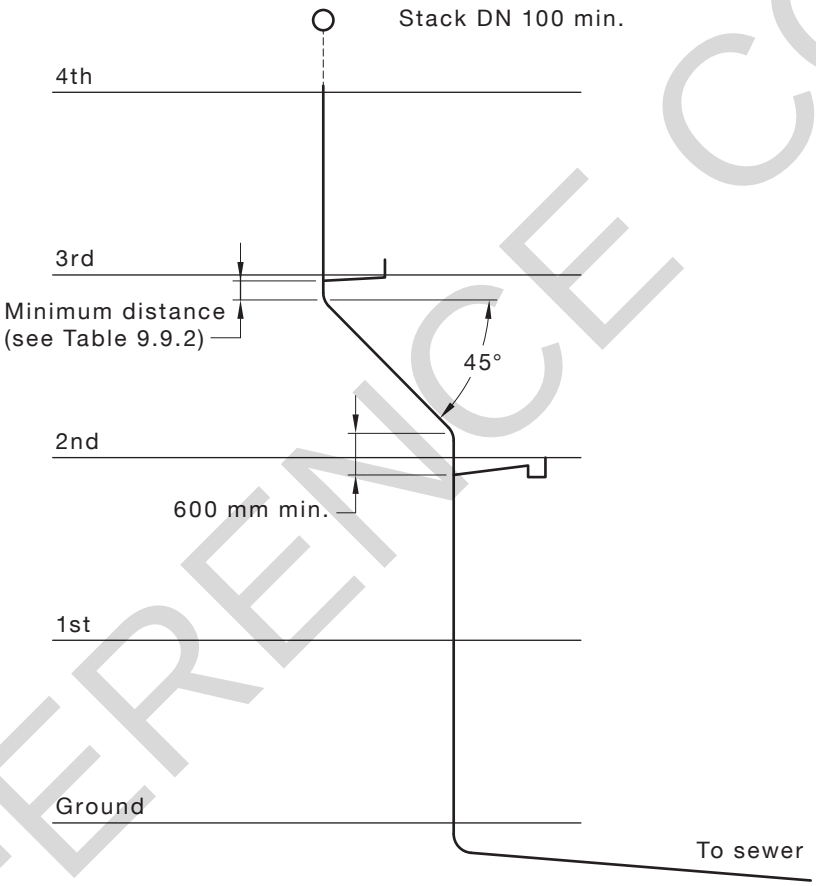

FIGURE 9.9.2(A) TYPICAL STEEP OFFSET

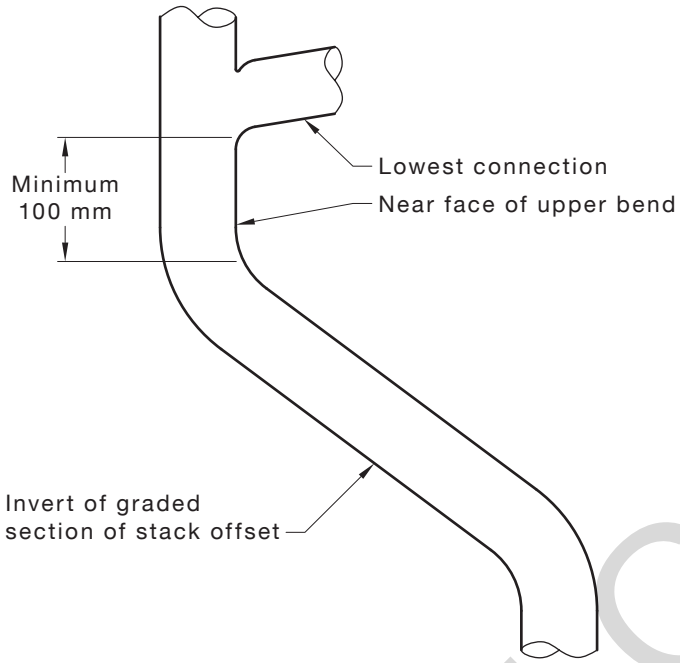

NOTE: Measurement increases with height of stack above offset and fixture unit loading.

FIGURE 9.9.2(B) NEAR FACE MEASUREMENT

9.9.3 Connection of laundry troughs to DN 100 stacks

Laundry troughs may be connected into either the upper or lower vertical section of a steep offset stack.

Laundry troughs shall be connected only to the upper section of a DN 100 stack in accordance with Table 9.9.3.

TABLE 9.9.3

OFFSET REQUIREMENTS FOR LAUNDRY TROUGHS

Maximum height in consecutive floor levels above upper offset bend	Minimum distance between upper offset bend and connection of fixture discharge pipe, mm	Maximum fixture unit loading
5	450	50
10	600	50

9.9.4 Steep offsets below the lowest connection

Where a steep offset is installed below the lowest connection to a stack of not less than DN 100, the minimum distance between the fixture connection and the upper offset bend shall be in accordance with Table 9.9.2. This distance may be reduced to 100 mm, provided the following requirements are met:

(a) The number of consecutive floor levels above the upper offset bend served by fixtures shall be three or less.

(b) The maximum loading shall not exceed 30 fixture units through the offset section.

(c) A laundry trough shall not be connected.

NOTE: For a typical steep offset below the lowest connection, see Figure 9.9.4.

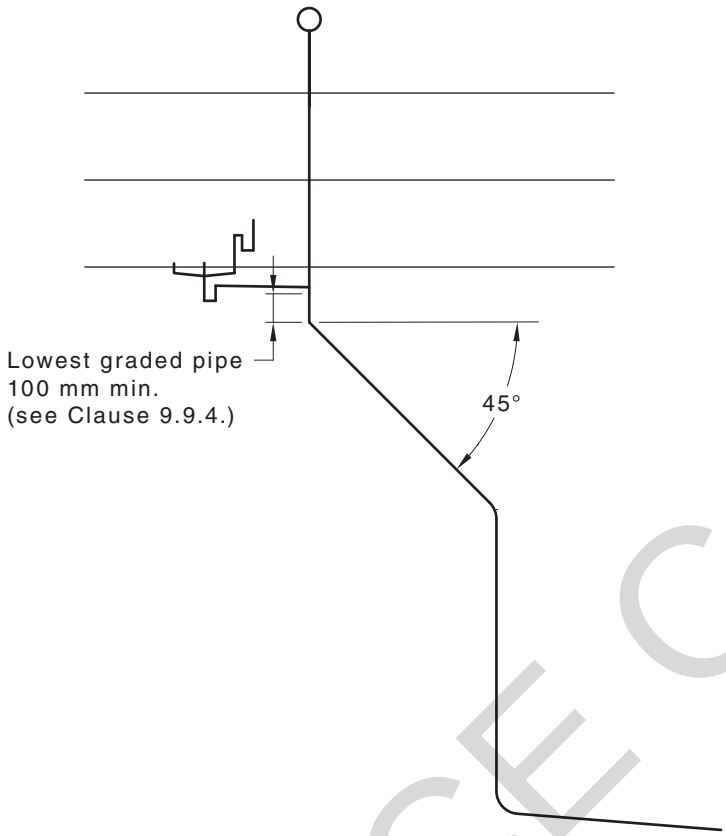

FIGURE 9.9.4 STEEP OFFSETS BELOW LOWEST CONNECTION

9.9.5 Graded offsets

DN 100 stacks may be offset between the base of the stack and the highest connection, provided the following requirements are met:

(a) Only one graded offset shall be installed in any stack.

(b) The height of the stack shall not exceed 10 consecutive floor levels.

(c) The minimum distance between the centre-lines of the vertical sections of the stack shall be 2 m.

(d) Fixtures shall be connected in accordance with Clause 8.6.2.

NOTE: For a typical graded offset, see Figure 9.9.5.

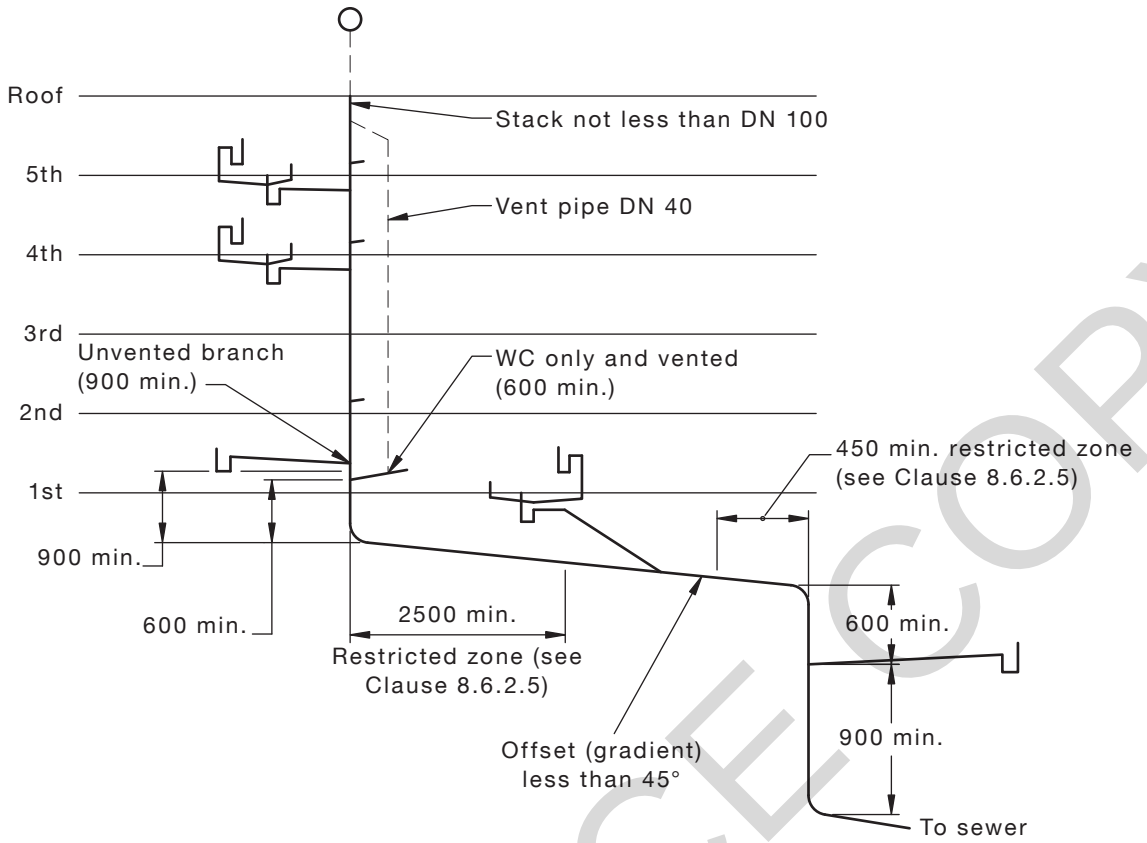

DIMENSIONS IN MILLIMETRES

FIGURE 9.9.5 GRADED OFFSET

9.9.6 Connections above the offset

Where fixtures are connected into the upper vertical section, the following apply:

(a) The height of the vertical section of the stack above the upper offset bend shall not exceed five consecutive floor levels.

(b) The maximum loading shall not exceed 90 fixture units.

(c) No connection shall be made to the vertical section within 900 mm of the upper offset bend. Where a water closet pan is the lowest fixture connected, the distance may be reduced to 600 mm, provided the fixture discharge pipe from the water closet pan is fitted with a DN 40 trap vent~~.~~ (~~See~~ see Figure 9.9.5~~.)~~).

SECTION 10 — GENERAL INSTALLATION OF PIPEWORK

10.1 SCOPE OF SECTION

This Section specifies requirements for the fixing, protection, spacing, and concealment of sanitary plumbing pipes and fittings.

NOTE: Installation of vacuum drainage pipework is covered in Section 16.

10.2 SUPPORT AND FIXING OF PIPEWORK

10.2.1 Brackets, clips and hangers

Brackets, clips and hangers shall be installed at the spacings specified in Table 10.2.1 and shall be—

(a) securely attached to the building structure and not to any other service;

(b) designed to withstand the applied loads;

(c) protected against corrosion where exposed to a corrosive environment;

(d) made from compatible materials;

(e) clamped securely to prevent movement, unless designed to allow for thermal movement;

(f) restrained to restrict lateral movement; and

(g) designed so that pipes and fittings are supported with minimal load being taken by the joints.

TABLE 10.2.1

MAXIMUM SPACING OF BRACKETS, CLIPS AND HANGERS

Pipework material	Maximum spacing of supports, m	
	Vertical pipes	Graded pipes
Cast iron	3	3
Ductile iron	3	3
Copper, copper alloy	3	3
FRC	4	4
PVC-U DN 40–50	2	1
PVC-U DN 65–150	2.5	1.2
PVC-U DN > 150	3	1.5
PP	2	1
PE	2	1

10.2.2 Limitation of pipe supports

The following applies for the limitation of pipe supports:

(a) Pipes shall not be supported by brazing or welding short sections of any material to the pipe surface, nor by clamping, brazing or welding to adjacent pipes.

(b) Brackets, clips and hangers incorporating PVC shall not be used in contact with stainless steel pipes.

10.2.3 Holes in framework

Where holes are formed in the framework to accommodate pipework, they shall be sized to allow free longitudinal movement of the pipework without affecting the structural integrity of the framework.

10.3 LOCATION

Pipework shall be located—

(a) so that it does not interfere with the operation of any door, window, access opening or with any other aspects of the operation of a building;

(b) where it does not cause a nuisance or injury to persons;

(c) not directly above drinking water storage tanks;

(d) as close as practicable to the wall of any building or supporting structure;

(e) so that it is protected from mechanical damage;

(f) with clearance from other services in accordance with Clause 3.6.1; and

(g) when constructed of plastic—

  (i) at a minimum distance of 75 mm from an insulated heated water pipe or 150 mm from an uninsulated heated water pipe; and

  (ii) below a heated water pipe, at a minimum distance of 150 mm from an insulated heated water pipe or 300 mm from an uninsulated heated water pipe.

10.4 CONCEALMENT OF PIPES AND FITTINGS

10.4.1 General

Pipes and fittings installed in buildings may be concealed, provided inspection openings are accessible.

10.4.2 Extension of inspection openings

Inspection openings may be extended to a wall or slab surface, to facilitate ease of maintenance.

10.4.3 Structural concrete or brickwork

Pipework shall not be installed in any structural concrete slab, beam, column, concrete wall or loadbearing brickwork, unless specifically included in the design of the structural element.

10.4.4 Drywall construction

Pipework concealed in drywall construction shall not structurally interfere with the wall.

10.4.5 Multiple dwellings

Any discharge pipes that serve fixtures within only one dwelling in a domestic or residential building shall be located wholly within that dwelling.

10.4.6 Walk-in pipe ducts

Pipework concealed in walk-in pipe ducts shall be installed so that there is clear and adequate space remaining to facilitate access for any inspection.

10.5 TESTING AND INSPECTION OPENINGS

10.5.1 General

This Clause (10.5) applies to plumbing systems, including elevated pipework, using drainage principles.

NOTE: For sanitary drains, see Clause 4.7.

10.5.2 Location of testing and inspection openings

All common discharge pipes and stacks shall be provided with openings for inspection and testing in the following locations:

(a) In any common discharge pipe where necessary for inspection and testing.

(b) At the base of every stack.

(c) At any level of a stack where necessary for inspection and testing.

(d) At intervals not greater than 30 m in every common discharge pipe.

(e) At every junction fitting that connects a common discharge pipe to a stack, or in the upstream section of the common discharge pipe.

NOTES:

1 Inspection and testing openings may be raised to finished surface level and fitted with an airtight removable cap.

2 Where testing or inspection openings are located within a tenancy occupied by another party, consideration should be given to raising the inspection or testing opening into the tenancy that it serves.

10.5.3 Size of testing and inspection of openings

Testing and inspection openings shall have a minimum clear diameter in accordance with Table 10.5.3.

TABLE 10.5.3

TESTING AND INSPECTION OPENINGS MINIMUM CLEAR DIAMETER

Nominal size DN	Minimum clear diameter mm
40	24
50	29
65	60
80	75
100	100
150	150
175	150
225	150
300	150

10.5.4 Access to inspection openings

Every required inspection opening shall be accessible.

10.6 INSTALLATION OF COPPER AND COPPER ALLOY PIPES

10.6.1 General

Copper and copper alloy pipes shall be installed in accordance with AS 4809 and Clauses 10.6.2 to 10.6.4.

10.6.2 Fixing

Copper and copper alloy pipes shall be fixed in accordance with the following:

(a) All brackets other than at expansion joints, when fully tightened, shall permit longitudinal movement of the tubing.

(b) All brackets for use at expansion joints, when tightened evenly, shall securely clamp the expansion joint fitting and prevent movement.

(c) All brackets shall be lined with PVC or other compatible non-abrasive and inert material, for the part of the fastener that is in contact with the pipe.

10.6.3 Expansion joints

10.6.3.1 *General*

Expansion joints shall be provided for all copper and copper alloy pipes used for sanitary plumbing systems in accordance with Clauses 10.6.3.2, 10.6.3.3 and 10.6.3.4, as appropriate.

10.6.3.2 *Stacks*

Stacks shall be provided with expansion joints in accordance with the following:

(a) Where any stack extends through more than two floors whether above its base or above any offset bend, expansion joints shall be fixed—

(i) at the base of the stack or in the vertical pipe above an offset bend; and

(ii) at each alternate floor level when the stack is unrestrained in accordance with Clause 10.6.4, or at each floor level except the top floor when the stack is restrained or subjected to heated water discharges such as those from dishwashing machines.

(b) The expansion joint at any intermediate floor shall be placed immediately above the junction of the highest discharge pipe connected at the floor concerned.

10.6.3.3 *Graded discharge pipes*

Where graded discharge pipes are restrained and are more than 6 m in length, an expansion joint shall be installed in the graded pipe as close as practicable to the stack.

10.6.3.4 *Bedpan sanitizer and washer*

Where a bedpan sanitizer and washer are supplied with steam and connected to a soil stack, soil vent or steam relief vent, an expansion joint shall be installed at each floor in the soil stack, soil vent and steam-relief vent pipe.

10.6.4 Freedom from restraint

A copper or copper alloy pipe is considered to be unrestrained (see Figure 10.6.4), provided the following requirements are met:

(a) Where the pipe passes through walls or floors, there shall be no restraint on longitudinal movement. An annular space of at least 6 mm shall be provided, and such space may be filled with flexible material.

(b) There shall be no restraint on movement on any branch discharge pipe for a distance of 450 mm from its junction with a stack. Where the discharge pipe traverses any floor or wall within such a distance, an annular space of at least 6 mm shall be provided.

NOTE: The annular space may be filled with flexible material.

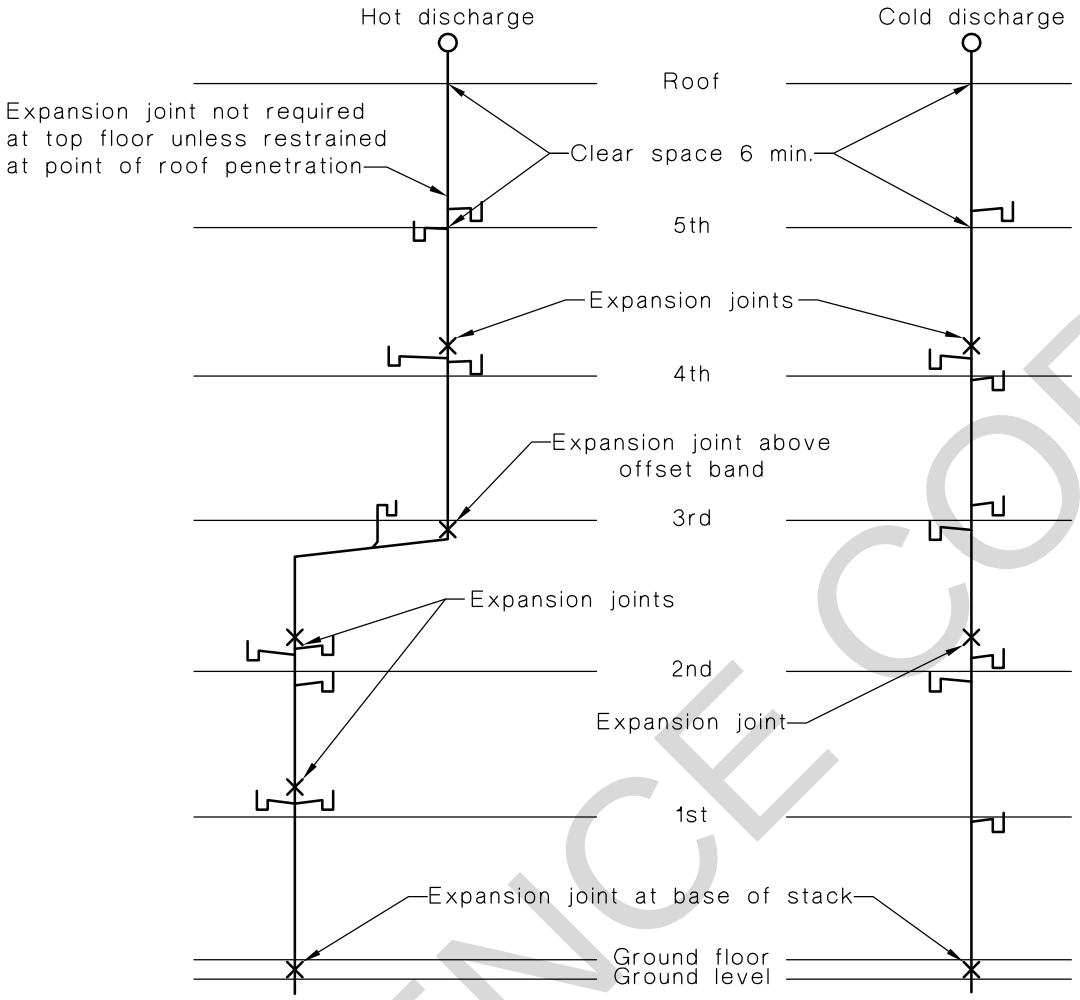

(a) Location of expansion joints

(b) Freedom from restraint

NOTE: Vents omitted for clarity.

DIMENSIONS IN MILLIMETRES

FIGURE 10.6.4 EXPANSION JOINTS IN COPPER AND COPPER-ALLOY STACKS

10.7 INSTALLATION OF PVC-U PIPES

PVC-U pipes shall be installed in accordance with AS/NZS 2032 or NZS 7643, as appropriate, and the requirements of this Standard.

10.8 INSTALLATION OF HIGH DENSITY POLYETHYLENE (PE-HD) PIPES

PE-HD piping systems shall be installed in accordance with AS/NZS 2033 and, when passing through concrete footings, PE-HD pipes and fittings shall be wrapped with an impermeable flexible sheath not less than 6 mm thick.

10.9 DISCONNECTION OF SANITARY PLUMBING

Disused pipework shall be disconnected as near as practicable to the connecting pipe remaining in service, and the remaining fitting made watertight by using a cap or plug sealed in a manner appropriate for the material remaining in use.

10.10 IDENTIFICATION OF PIPES

Other than in houses or duplexes (Class 1A), all pipes installed in ducts, accessible ceilings or exposed in basements or plant rooms shall be clearly identified in accordance with AS 1345 or NZS 5807, as appropriate.

10.11 INSTALLATION OF ABOVE-GROUND (ELEVATED) PIPEWORK AND CONNECTION OF FIXTURES USING DRAINAGE PRINCIPLES

10.11.1 General

Above-ground (elevated) pipework and associated fixture connections may be installed within buildings, provided they are installed in accordance with the requirements of Clauses 10.11.2 to 10.11.4.

10.11.2 Maximum length and size

The maximum length and size of any unvented graded pipe, branch or fixture discharge pipe shall be in accordance with Clause 3.10 and Table 3.10.2.

10.11.3 Applicable installations

The requirements of this Clause shall apply to the first four floor levels only above either the invert level of the connection point to the boundary trap riser or inspection shaft, and the uppermost floor only where connected into a discharge stack.

Branches serving the uppermost floor, which connect to a discharge stack, may use drainage principles.

Branches serving the floors below the uppermost floor shall ~~comply~~ conform with a nominated stack design in accordance with Clause 10.11.4(b).

10.11.4 Installation

Above-ground (elevated) pipework, materials, methods of support and fixing shall be in accordance with the relevant requirements of this Standard and the following:

(a) No graded discharge pipe or branch, except a discharge stack, shall connect to any vertical section of pipework within the first four floor levels.

(b) Any discharge stack system in excess of the maximum of four floor levels specified in Clause 10.11.3 shall be installed as a stack in accordance with the relevant requirements of ~~Section 6, Section~~ Sections 6, 8, ~~Section~~ 9 or Section 10, as applicable.

(c) The loading in fixture units shall not exceed the maximum specified in Tables 3.3.1, 3.10.2 and 8.2.2(B), as applicable.

(d) The connection of any discharge pipe or branch to the elevated pipework shall be in accordance with the relevant requirements of Clauses 6.6, 6.7, 8.6 and 9.9, and Section 11.

(e) The total length of an unvented branch pipe, including the length of the fixture discharge pipe that connects to the main section of graded elevated pipework, shall be in accordance with Clause 3.10.3.

NOTES:

1 The discharge stack may roll over on the top floor or carry on as a stack vent.

2 A maximum loading of 30 fixture units, including not more than two WC pans or two slop hoppers, may discharge into any branch on the top floor of a discharge stack without further ventilation.

3 For details of installation see Figure 10.11.4.

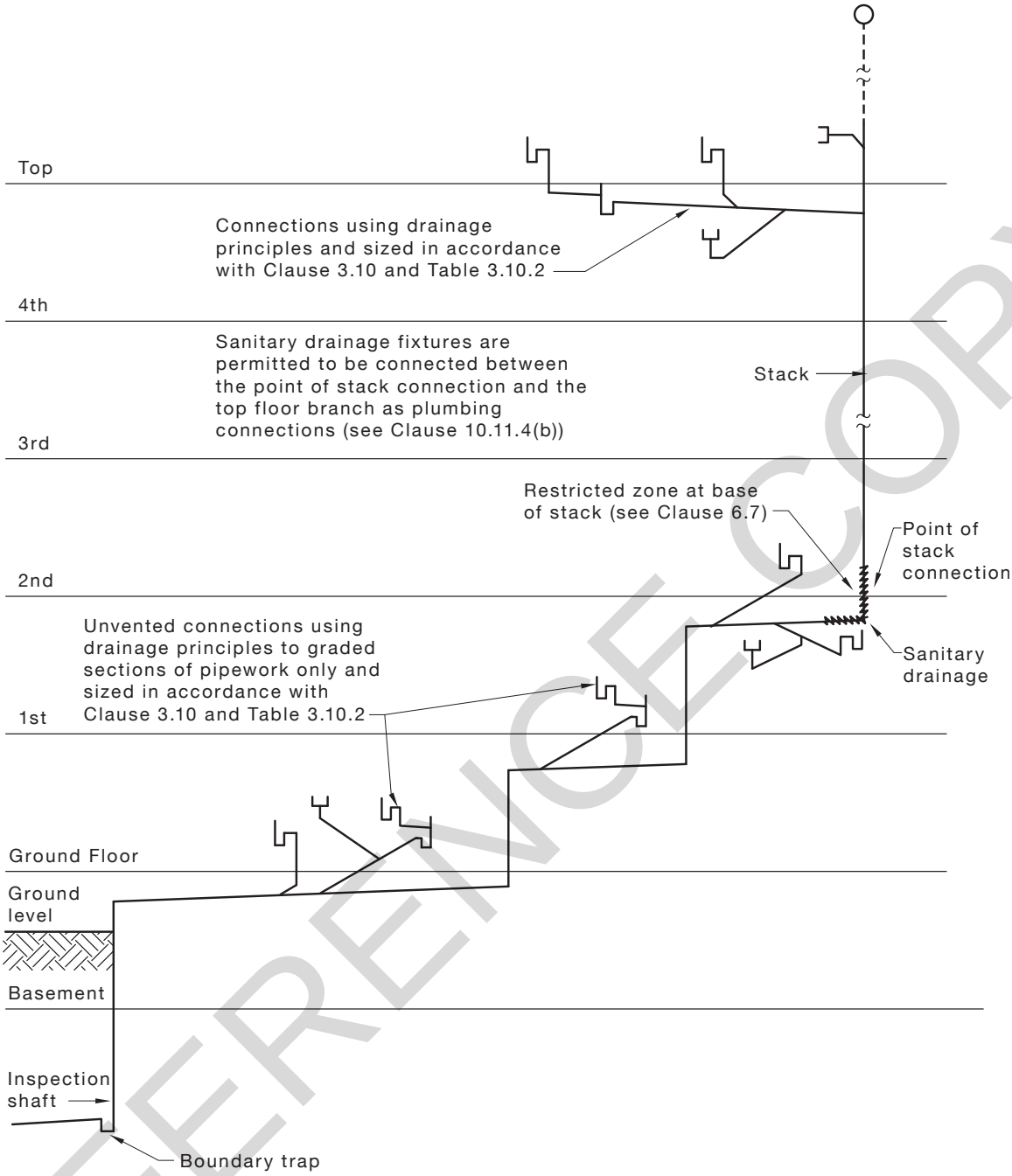

FIGURE 10.11.4 ABOVE-GROUND (ELEVATED) PIPEWORK WITHIN BUILDING—BASED ON DRAINAGE PRINCIPLES

10.12 INSTALLATION OF BOUNDARY TRAPS, REFLUX VALVES AND GULLIES ABOVE GROUND WITHIN BUILDINGS

10.12.1 Boundary traps

Boundary traps installed within a building and above ground or floor surface level shall ~~comply~~ conform with the relevant requirements of Clause 4.4.

10.12.2 Reflux valves

Reflux valves within a building shall be installed in accordance with the following:

(a) Where located above ground or floor surface level, the installation shall ~~comply~~ conform with the relevant requirements of Clause 4.5.

(b) Where installed immediately below any floor slab or other structure, a clear space shall be provided above the reflux valve to facilitate maintenance.

10.12.3 Gullies

Gullies located within buildings shall—

(a) be installed above ground or floor surface level;

(b) be supported in the same manner as for a boundary trap;

(c) be provided with an overflow pipe that shall terminate at a height in accordance with Clause 4.6.6; and

(d) ~~comply~~ conform with the relevant requirements of Clause 4.6.

10.13 METHODS OF JOINTING OF PIPES

10.13.1 General

The joints between discharge pipes, vent pipes, fittings, fixtures and appliances shall be made as appropriate for the materials being joined, and each joint shall be rendered airtight.

Joints between similar and dissimilar materials shall be made using one of the joint types specified in Table 10.13.1.

Jointing materials shall ~~comply~~ conform with Clause 2.6.

TABLE 10.13.1

JOINTS FOR PIPES AND FITTINGS OF SIMILAR AND DISSIMILAR MATERIALS

To—Material 2	From—Material 1								
	Cast and ductile iron	Copper and copper alloy	Galvanized steel	PP	PVC-U	PE	ABS/ASA	VC	FRC
Cast and ductile iron	BG RR ER	BG RR* SB/ER	BG RR* ER	BG RR	BG RR SC/ER BC	BG RR	BG RR SC/ER BC	RR/BG RR/ER RR CN BC	RR BC
Copper and copper alloy	BG RR* ER/SB	SB RR	BG TH/SB ER/SB	TH/SB RR	SC/TH/SB SC/ER/SB RR	RR SB/TH	SC/TH/SB SC/ER/SB RR	RR/SB RR/BG RR/ER CM	RR BC ER
Galvanized steel	BG RR* ER	BG SB/TH SB/ER	TH BG	TH	SC/TH SC/ER	TH	SC/TH SC/ER	CM RR RR/ER	RR BC
PP	BG RR	SB/TH RR	TH	RR TH EF	RR SC/TH	RR TH	RR SC/TH	RR CM	RR BC
PVC-U	BG RR ER/SC	SB/TH/SC SB/ER/SC RR	TH/SC ER/SC	RR TH/SC	SC RR BC	TH/SC RR BC	SC RR BC	RR/SC BC	RR BC ER
PE	BG RR	SB/TH RR	TH	RR TH	SC/TH RR BC	EF RR BG	SC/TH RR BC	RR CM	RR BC
ABS/ASA	BG RR ER/SC	SB/TH/SC SB/ER/SC RR	TH/SC ER/SC	RR TH	SC RR BC	TH/SC RR BC	SC RR BC	RR/SC BC	RR BC ER
VC	BG/RR ER/RR RR CM BC	SB/RR BG/RR ER/RR CM	CM RR ER/RR	RR CM	SC/RR BC	RR CM	SC/RR BC	RR CM BC	RR BC
FRC	RR BC	RR BC	RR BC	RR BC ER	RR BC ER	RR BC	RR BC ER	RR BC	RR BC ER

* Applies to vent connections only.

LEGEND: ~~LEGEND~~

BG = bolted gland
RR = rubber ring
ER = epoxy resin
CM = cement mortar
SB = silver brazed
SC = solvent cement
TH = threaded
BC = band clamped sleeve
EF = electrofusion

NOTE: Where more than one joint type is shown separated by one or more slashes, the joint between the two different materials requires an adaptor. The other of the joints is always shown from (Material 1) to (Material 2) as indicated in the Table headings.

10.13.2 Bolted gland joints (BG)

Bolted gland joints shall ~~comply~~ conform with AS 1631 for cast iron material and, for other materials, with the relevant requirements of AS 1631.

The sealing rings used shall be appropriate for the material and dimensions of the pipes or fittings being joined.

10.13.3 Rubber ring joints (RR)

When used in sanitary drainage work, rubber ring joints used below ground shall be designed to inhibit root penetration.

10.13.4 Epoxy resin joints (ER)

Epoxy resin shall be appropriate to the materials being joined.

NOTE: Epoxy resin joints should only be used where the joint is designed for use with epoxy resin.

10.13.5 Cement mortar joints (CM)

Cement mortar shall ~~comply~~ conform with Clause 2.7.2.

10.13.6 Silver brazed joints (SB)

Silver-brazed joints shall be made using silver brazing alloy ~~complying~~ conforming with Clause 2.6.3.1. Joints shall be made by either—

(a) using fittings; or

(b) fabricating junctions from the pipes using tools specially designed for the purpose.

10.13.7 Solvent cement joints (SC)

Solvent cement and priming fluid used for jointing plastics pipes and fittings shall ~~comply~~ conform with Clause 2.6.5.1 as appropriate.

10.13.8 Threaded joints (TH)

Threaded joints shall ~~comply~~ conform with the relevant Standards for the materials to be joined and sealed.

10.13.9 Band-clamped sleeve joints (BC)

Band-clamped sleeve joints shall ~~comply~~ conform with AS 1646.

10.13.10 PE-HD joints

PE-HD joints shall be installed in accordance with AS/NZS 2033.

SECTION 11 REDUCED VELOCITY AERATOR STACK SYSTEM

11.1 SCOPE OF SECTION

This Section specifies design and installation requirements for the reduced velocity aerator stack system for sanitary plumbing.

11.2 GENERAL

Where the system uses an aerator junction fitting (a proprietary junction fitting) in the stack at each floor level for connection of graded discharge pipes, common discharge pipes or branch drains from sanitary fixtures, a de-aerator shall be included at the base of the stack.

NOTE: Airflow requirements of the system are provided through the stack vent.

Discharge pipes, common discharge pipes and branch drains that exceed the maximum allowable length or fixture unit loading shall be vented.

11.3 SIZE OF STACKS

The stack shall be sized in accordance with Tables 6.2(A), 8.2.2(A) and 8.2.2(B), and Clause 8.4, Items (a), (b), (c) and (e).

Where any stack is offset, the offset section shall be sized—

(a) as a straight stack, if the offset is more than 45° to the horizontal; or

(b) as a graded pipe, if the offset is less than 45° to the horizontal, and the stack shall continue undiminished in size.

The stack shall not be reduced in size in any direction.

11.4 STACK VENTS

Stacks shall extend unimpeded to atmosphere.

NOTE: Stack vents may be connected at their uppermost end into a common header terminating at one point.

If interconnected, interconnection of stack vents shall occur not less than 1 m above the highest flood rim level of the highest fixture. The size of header vent shall increase by one pipe size downstream of each interconnection junction~~. See~~ [see Figure 11.4(A)].

The number of interconnected stacks shall not exceed 5 × DN 100 stacks or 4 × DN 125 stack, with a maximum size vent of DN 300 terminating through the roof.

If the horizontal length of the stack vent offset exceeds 12 m, the size of the offset shall be increased by one pipe size~~. See~~ [see Figure 11.4(B)].

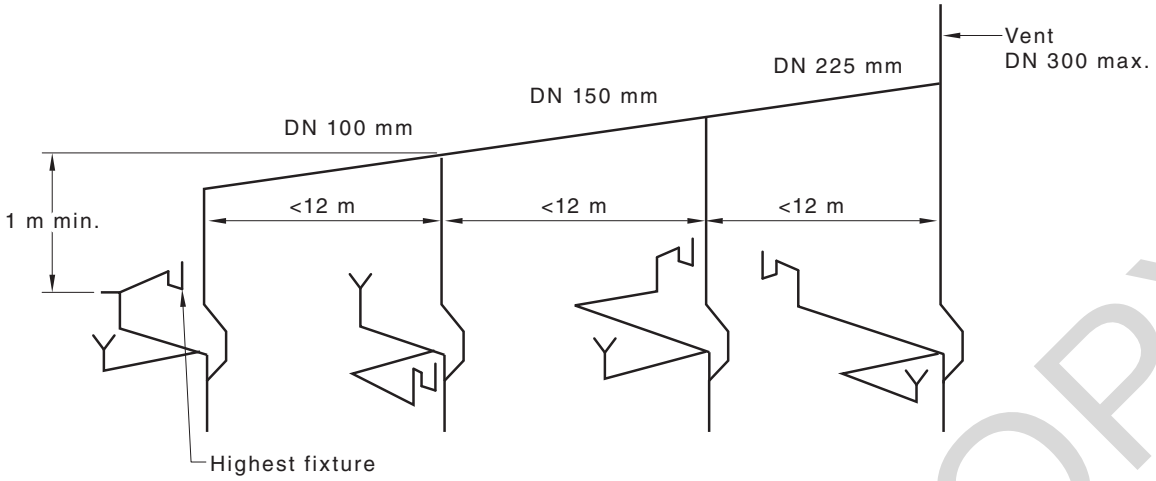

FIGURE 11.4(A) MANIFOLDING OF STACK VENTS

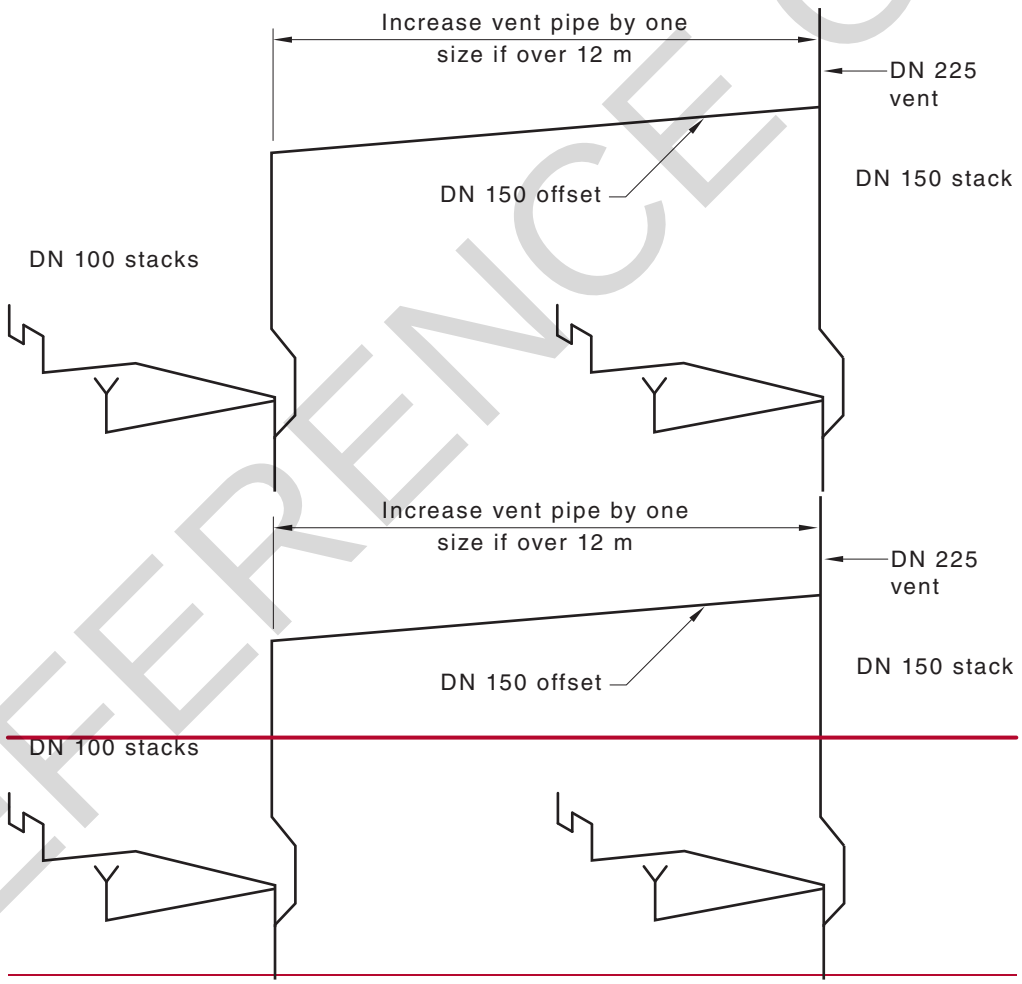

FIGURE 11.4(B) STACK VENT OFFSETS OVER 12 m

11.5 OFFSETS IN STACKS

11.5.1 General

The following applies for offsets in stacks:

(a) A double inline offset shall be installed midway if the distance between any two aerators or an aerator junction fitting and a de-aerator exceeds 5 m~~. See~~ [see Figure 11.5.1(A)].

(b) A pressure relief bypass pipe between the upper and lower sections of the stack shall be installed on every stack offset greater than 45°~~. See~~ [see Figure 11.5.1(B)].

(c) The minimum grade of stack offsets shall be in accordance with Table 8.6.2.2.

Connections near graded offsets shall be restricted in accordance with Clauses 8.6.2.3, 8.6.2.4 and 8.6.2.5.

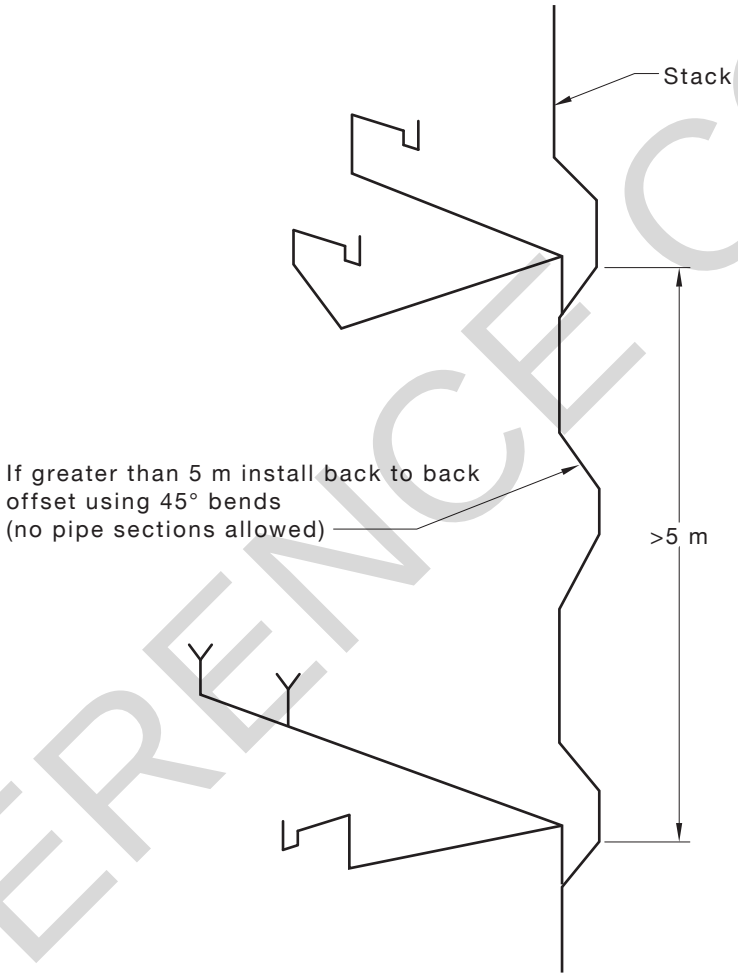

FIGURE 11.5.1(A) DOUBLE INLINE OFFSET

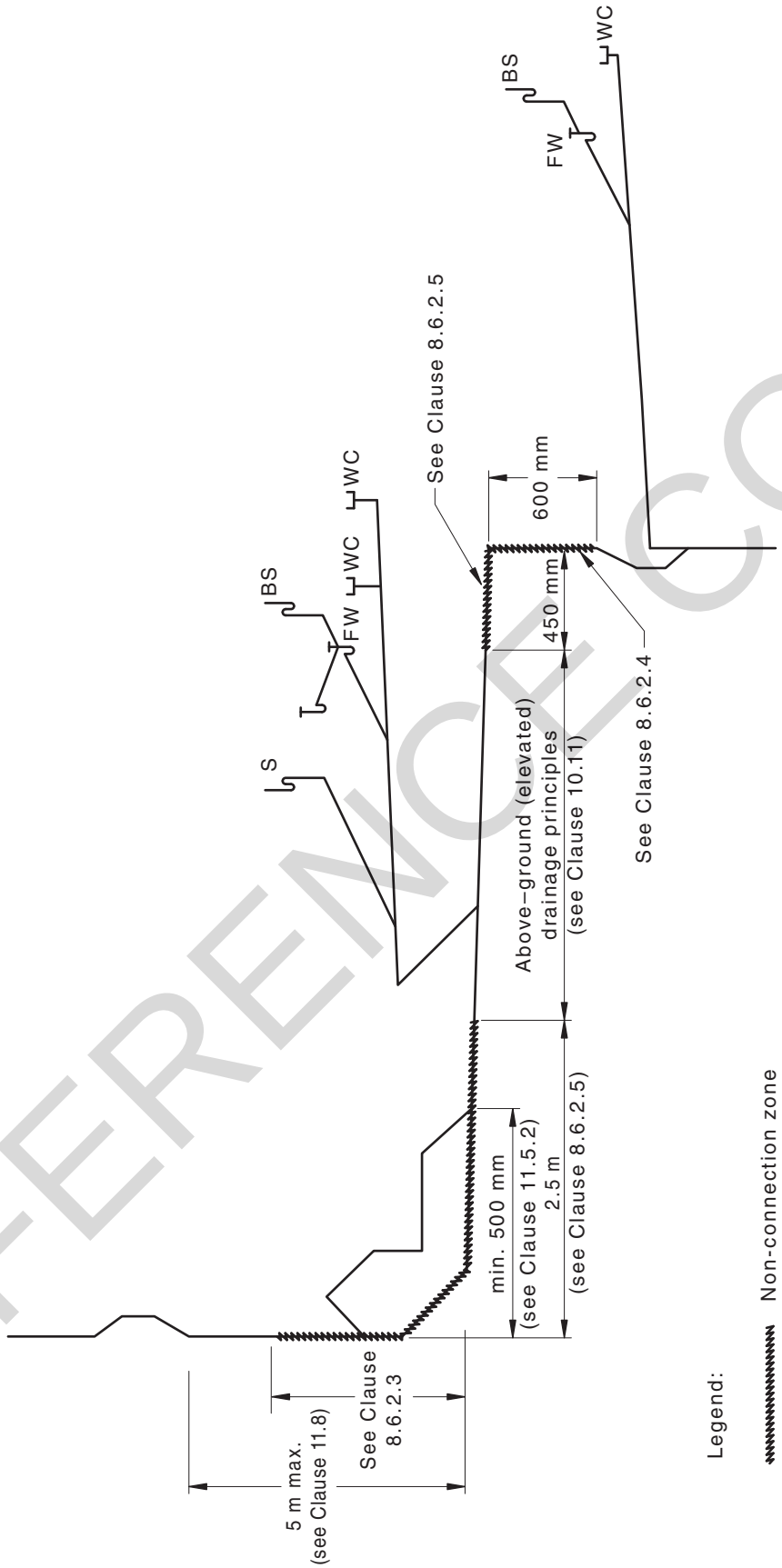

FIGURE 11.5.1(B) GRADED STACK OFFSET WITH PRESSURE RELIEF BYPASS

11.5.2 Pressure relief bypass for stack offsets

Where a pressure relief bypass is used for a graded stack offset, the pressure relief bypass pipe shall run at least 0.5 m from the centre-line of the stack to the centre of the pressure relief bypass inlet junction. No connections shall be made into bypass pipe.

11.6 AERATOR JUNCTION FITTINGS

11.6.1 General

An aerator junction fitting shall be installed at each floor level that receives a soil or waste discharge.

11.6.2 Opposed connections

Opposed connections of aerator junction fittings shall be connected only to equal numbers of fixtures of the same kind.

NOTE: For a typical aerator junction fitting, see Figure 11.6.2.

FIGURE 11.6.2 TYPICAL AERATOR JUNCTION FITTING

11.7 MAXIMUM LENGTH OF DISCHARGE PIPES

Any unvented discharge pipe or unvented common discharge pipe shall not exceed 10 m in length, and shall not include a vertical drop, between the crown of the trap and the invert of the junction, exceeding—

(a) 2 m for water closet pans with DN 80 discharge pipes;

(b) 1.5 m for basins and bidets; and

(c) 2.5 m for all other fixtures.

The length of a graded discharge pipe shall be in accordance with Appendix ~~C~~B.

11.8 SIZE OF DISCHARGE PIPES

The size of a graded discharge pipe, common discharge pipe or branch drain shall be in accordance with Table 3.10.2 and Appendix ~~C~~B.

11.9 DE-AERATORS

A de-aerator shall be installed at the base of the stack to provide a pressure relief bypass between the stack and the drain to which it is connected, as shown in Figure 11.9.

The distance from the de-aerator to the closest aerator or double offset shall not exceed 5 m [see Figure 11.4(A)].

The pressure relief bypass pipe on a de-aerator shall run at least 2.5 m from the centre-line of the stack to the centre of the pressure relief bypass inlet junction, as shown in Figure 11.9. No connection shall be made into the bypass pipe.

No connections shall be made to the de-aerator graded pipe within 2.5 m of the stack base.

Pressure relief bypass pipes for de-aerators shall run parallel to the base of the de-aerator with the invert of the pressure relief bypass pipe no lower than the centre-line of the drain.

NOTE: See also Figures 11.4(B) and 11.9.

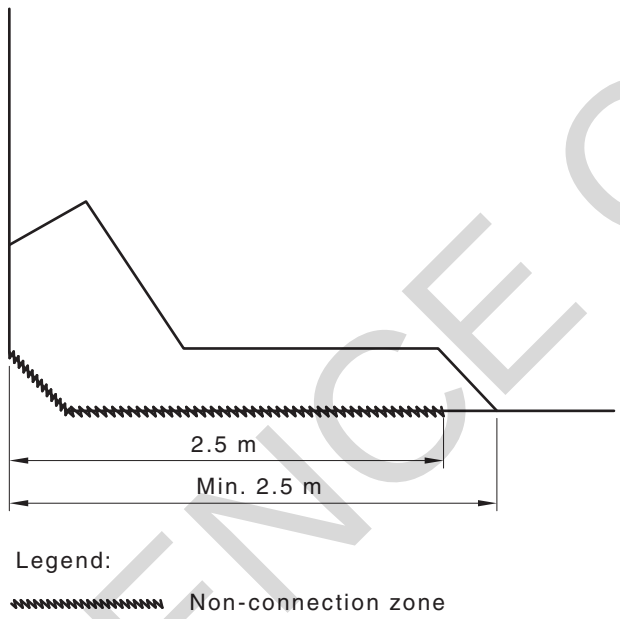

FIGURE 11.9 DE-AERATOR WITH PRESSURE RELIEF BYPASS PIPE AT THE BASE OF THE STACK

SECTION 12 PUMPED DISCHARGE

12.1 SCOPE OF SECTION

This Section specifies requirements for pumped discharge.

12.2 GENERAL

Pumping shall only be used where it is not practicable to gravitate to the connection. The pumping apparatus shall be positioned to facilitate easy connection to the gravity sewer.

The pumping apparatus may be one of the following:

(a) Compressed air ejection system.

(b) Wet well (including submersible pump).

(c) Small bore macerator/pump.

12.3 COMPRESSED AIR EJECTION

Ejector pots shall be sized according to maximum flow rates.

NOTE: Ejector pots may be duplicated.

12.4 EJECTOR VENT

The ejector vent shall be not less than DN 40, and shall either—

(a) extend separately to open air; or

(b) be interconnected with a relief or stack vent at least 10 m above the ejector pot.

12.5 WET WELLS

12.5.1 General

Wet wells shall be fit for purpose and installed in an accessible location.

12.5.2 Construction

The structure shall be sound and constructed of materials that will resist corrosion from the sewage and sewage gases internally and aggressive soils externally.

12.5.3 Materials

Materials for wet wells shall be precast or cast in situ reinforced concrete, corrosion-resistant metals, brickwork or glass-reinforced plastics.

12.5.4 Base

The base shall be constructed of, or finished with, a self-cleansing grade towards the pump inlet.

12.5.5 Cover

The cover shall be constructed of similar materials to that of the wet well and shall have access openings with removable airtight covers sized for maintenance purposes.

12.5.6 Ladders

Where a wet well exceeds a depth of 1.2 m, a ladder shall be provided in accordance with Clause 4.8.3.3.

12.6 INSTALLATION OF PUMPS

12.6.1 General

Pumps shall be suitable for unscreened sewage and shall be installed as follows:

(a) The pumping apparatus shall be securely fixed using corrosion-resistant fixings.

(b) Each pump shall be fitted with an isolating valve and check valve on the delivery side.

(c) Pumps shall be installed with connections to permit removal and replacement of the pumps.

(d) Pumps shall be controlled so as to limit the number of starts per hour to within the capacity of the pump, and shall, as far as practicable, empty the contents of the wet well at each operation.

NOTES:

1 Pumps may be duplicated.

2 The required pumping rate should be based on an assessment of the expected inflow, holding capacity of the well and allowable discharge.

12.6.2 Inlet to wet well

The invert of the gravity discharge pipe to a wet well shall be located at least 100 mm above the highest working level and terminate with a square junction.

12.6.3 Venting

The wet well shall have a minimum DN 80 vent.

NOTE: Manufactured wet wells that are watermarked may be approved with a smaller vent size.

12.6.4 Sealing

All pipes or apparatus passing through the wet well walls or cover shall be sealed with a compatible material.

12.7 PUMPED DISCHARGES OR RISING MAINS

The pump discharge pressure piping shall ~~comply~~ conform with the relevant sections of AS/NZS 3500.1 and this Standard. The outlet pipe shall discharge to one of the following locations:

(a) An inspection chamber.

(b) A boundary trap shaft.

(c) A stack below the lowest fixture connection on any floor.

(d) A drain or combined discharge pipe, provided the connection is at least 2.5 m from any other connection.

(e) Downstream of a reflux valve or at least 2.5 m upstream of a reflux valve.

(f) A minimum of 1 m downstream of a boundary trap.

(g) Direct to the network utility operator's sewer where approved by the network utility operator.

12.8 PUMP DISCHARGE FROM WASTE FIXTURES

12.8.1 General

Pumping shall only be used where gravity connection from a waste fixture is not possible. The pumping apparatus shall be positioned in the same room adjacent to the waste fixture.

12.8.2 Holding tank

The holding tank shall ~~comply~~ conform with Clauses 12.5.2, 12.5.4 and 12.5.5.

12.8.3 Provision of valves

Valves shall be provided as follows:

(a) Where the pump is located inside the holding tank, a non-return valve and isolating valve shall be located on the outlet side of the pump.

(b) Where the pump is located outside of the holding tank, an isolating valve shall be located on the inlet and outlet of the pump and a non-return valve shall be located on the downstream of the outlet isolating valve.

12.8.4 Inlet

The invert of each waste inlet shall be located at least 100 mm above the highest working level of the holding tank.

12.8.5 Outlet size

The pump discharge pipes shall be at least DN 25 and not less than the pump outlet size.

12.8.6 Venting

The holding tank shall be provided with a vent having a minimum size of DN 50 and shall ~~comply~~ conform with the venting requirements for waste fixtures. The vent shall be positioned a minimum of 100 mm above the waste inlet.

12.8.7 Pump discharge pipe

The pump discharge pipe from waste fixtures, or swimming pools shall be connected in accordance with Clause 12.7, or connected to a gully riser~~.~~, as shown in Figure 12.8.7(A) or Figure 12.8.7(B).

~~NOTE: Examples of connection to gully are shown in Figure 12.8.7(A) and Figure 12.8.7(B).~~

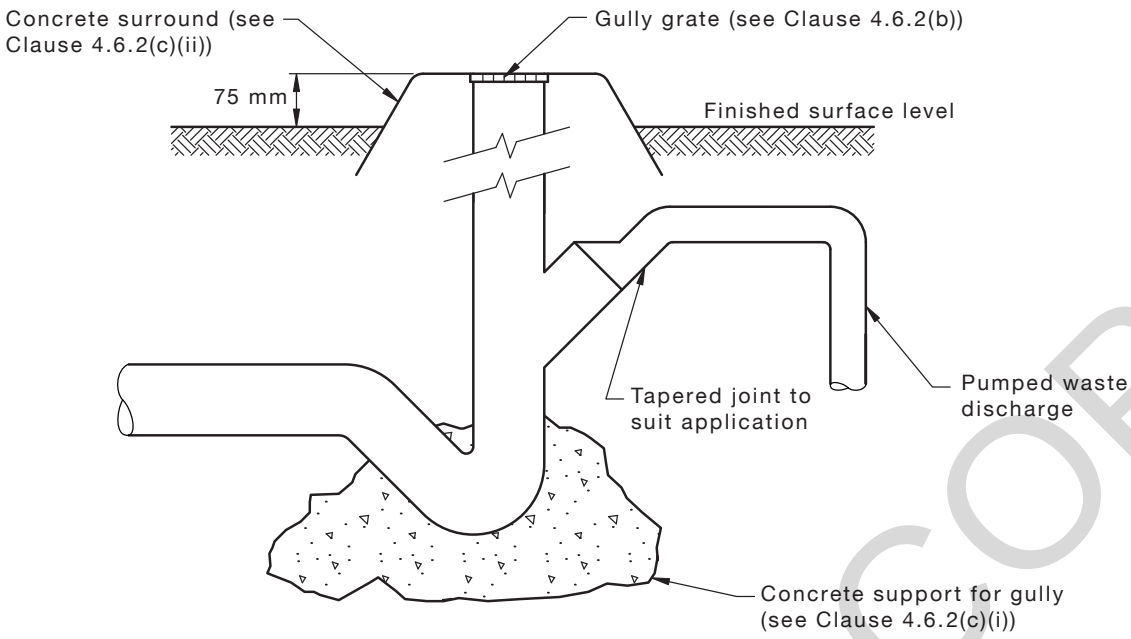

FIGURE 12.8.7(A) ~~TYPICAL~~ CONNECTION OF PUMPED WASTE DISCHARGE

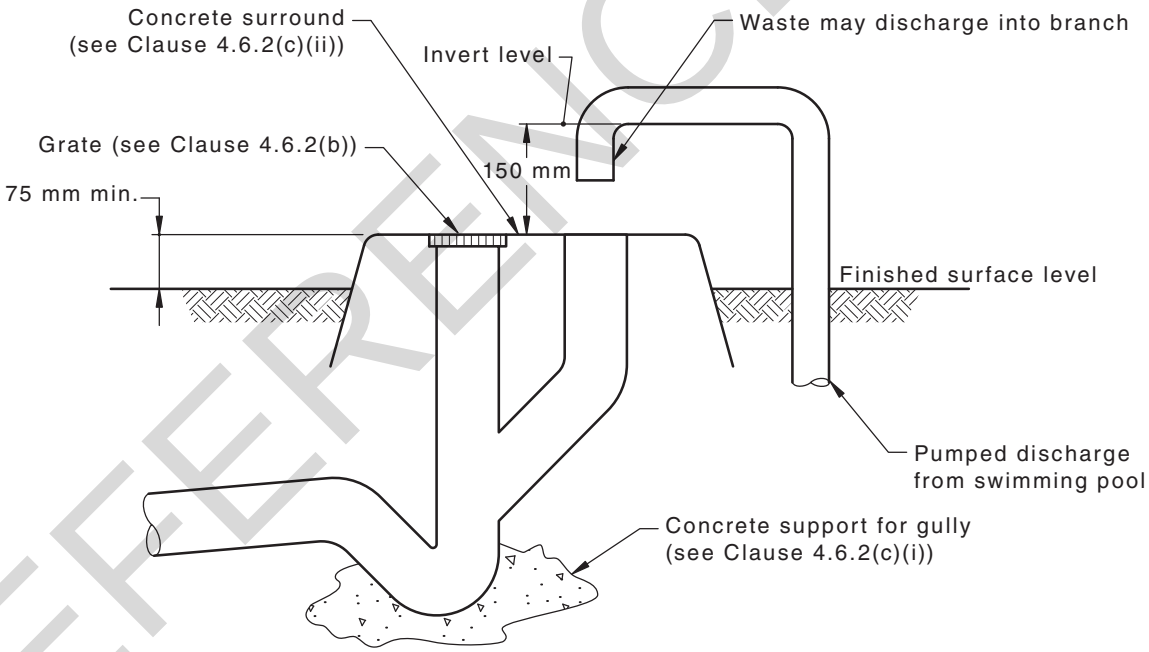

FIGURE 12.8.7(B) ~~TYPICAL~~ CONNECTION OF PUMPED WASTE DISCHARGE FROM SWIMMING POOLS

12.9 SMALL BORE MACERATOR PUMPS

Small bore macerator pumps shall discharge in accordance with Clause 12.7.

A vent pipe to a macerator pump shall terminate in accordance with Clause 6.8.4 or interconnect with any other vents other than those specified in Clause 6.8.3.

NOTE: Small bore macerator pumps may not operate if air admittance valves are the sole means of venting the unit.

SECTION 13 FIXTURES AND APPLIANCES

13.1 SCOPE OF SECTION

This Section specifies requirements for the installation of sanitary fixtures and appliances, and their connection to the sanitary plumbing or sanitary drainage system.

The maximum lengths of discharge pipes without venting shall be in accordance with Appendix ~~C~~B.

Water supply for the sanitary flushing shall be in accordance with AS/NZS 3500.1.

13.2 INSTALLATION OF SANITARY FIXTURES FOR PEOPLE WITH A DISABLITY

The installation of sanitary fixtures for people with a disability shall ~~comply~~ conform with—

(a) in Australia, the NCC; or

(b) in New Zealand, the requirements of the New Zealand Building Code.

13.3 GENERAL INSTALLATION REQUIREMENTS

13.3.1 Installation of fixtures

Fixtures and appliances shall be secured in position, independent of support from their traps, waste and discharge pipes or water supply connections. They shall be installed in a manner that facilitates disconnection.

13.3.2 Location of fixture traps or self-sealing devices

Fixture traps or self-sealing devices shall be installed downstream of the fixture outlets in accordance with Clause 6.4.3.

13.3.3 Untrapped fixtures

Untrapped fixtures that discharge through a floor waste gully shall be connected in accordance with Table 4.6.3.

13.3.4 Connection of combination fixtures in pairs

Where a combination of waste fixtures is connected in pairs to a single fixture trap, the arrangement shall be in accordance with Clause 6.4.4.

13.3.5 Connection of soil fixtures

Soil fixtures shall not discharge through floor waste, or overflow relief or disconnector gullies.

13.3.6 Fixture grates

Excluding water closet pans, slop hoppers, bedpan washers, bedpan sterilizers, tundishes, soil dump points and sanitary napkin disposal units, the outlet of each fixture shall be provided with a grate.

Where the fixture trap is not accessible, the grate shall be removable.

13.3.7 Fixture discharge pipes

Fixture and appliance discharge pipes shall be installed in accordance with the following:

(a) Clause 3.10 for direct to drain connections.

(b) Clause 3.11 and Clause 3.12 for unvented drains discharging to gullies.

(c) Clause 4.6.7 for floor waste gully connections.

(d) Table 4.6.3 for disconnector gully connections.

(e) Clause 6.5 for graded discharge pipe connections.

(f) Clause 8.3 for fully vented and fully vented modified stack connections.

(g) Clause 9.5 for single stack and single stack modified stack connections.

(h) Clause 10.11 for above-ground pipework and connection of fixtures using drainage principles.

(i) Section 11 for reduced velocity aerator stack systems.

(j) Appendix ~~C~~B for maximum length of fixture discharge pipe without venting.

13.4 PLANT ROOMS

Discharges from plant rooms shall drain to a tundish, trapped sump or floor waste gully.

Fixture unit ratings shall be determined from Table 6.2(B).

13.5 PRESSURIZED CHAMBERS

Where a floor waste gully is located in a pressurized chamber, the trap shall be in accordance with Clause 6.4.2.

13.6 AUTOPSY TABLES

Autopsy tables shall be connected to sanitary drains in accordance with the following:

(a) Each autopsy table shall drain through an untrapped waste pipe not smaller than DN 50 and a maximum length of 1.2 m to a flushing floor waste gully with an outlet not smaller than DN 65.

(b) The water supply to the flushing floor waste gully shall be from a flush valve, cistern or break tank.

13.7 BAIN-MARIES AND BOILING WATER UNITS

Bain-maries and boiling water units shall drain to a tundish installed in accordance with Clause 13.21.

13.8 BASINS

Basins shall be fitted with a DN 40 (or DN 32, New Zealand only) trap and a waste pipe not smaller than DN 40 or connected as fixture pairs in accordance with Clause 6.4.4.

13.9 BATHS

Baths shall be connected by—

(a) an untrapped waste pipe not smaller than DN 40 to a floor waste gully in accordance with Table 4.6.7.2; or

(b) a trap and waste pipe not smaller than DN 40.

Where a bath trap is not accessible, the bath shall discharge untrapped to a floor waste gully (FWG) in accordance with Table 4.6.7.2 and Appendix ~~C~~B.

13.10 BEDPAN WASHERS AND SANITIZERS

Bedpan washers and sanitizers shall be fitted with traps and discharge pipes not smaller than DN 80.

13.11 BIDETS

Bidets and bidettes shall be connected by—

(a) an untrapped waste pipe not smaller than DN 40 (or DN 32, New Zealand only) to a floor waste gully; or

(b) a trap and waste pipe not smaller than DN 40 (or DN 32, New Zealand only).

13.12 DENTAL UNITS

13.12.1 Single

A single dental unit shall discharge through a sealed trap not smaller than DN 40.

13.12.2 Multiple

Multiple dental units draining to a common point shall discharge through a sealed trap not smaller than DN 50.

13.13 DRINKING FOUNTAINS

Drinking fountains shall be fitted with a DN 40 (or DN 25, New Zealand only) trap and a waste pipe not smaller than DN 40 (or DN 32~~-~~, New Zealand only).

13.14 FOOD WASTE DISPOSAL UNITS (DOMESTIC TYPE)

The outlet of a waste disposal unit may be connected directly to the trap of an adjoining kitchen sink.

NOTE: For an example, see Figure 13.25.2.1(c).

13.15 REFRIGERATED AIR CONDITIONERS, HEAT PUMPS, REFRIGERATED, DEEP-FREEZE CABINETS, COMMERCIAL COFFEE-MAKING MACHINES AND ICE-MAKING MACHINES

Outlet pipes from refrigerated ~~and~~ air conditioners, heat pumps, refrigerated, deep-freeze cabinets, commercial coffee-making machines and ice-making machines shall be connected to a tundish installed in accordance with Clause 13.21 or discharge above the inlet to a self-sealing device.

13.16 MACERATING SANITARY NAPKIN DISPOSAL UNITS

Macerating sanitary napkin disposal units shall not discharge to a floor waste, or overflow relief or disconnector gully.

13.17 SHOWERS

13.17.1 Individual showers

An individual shower shall be fitted with a minimum DN 80 grate or channel grate, and shall be connected by—

(a) an untrapped waste pipe not smaller than DN 40 to a floor waste gully;

(b) a trap and waste pipe not smaller than DN 40.

NOTE: Prefabricated shower bases will need to be supported in accordance with the manufacturer's instructions.

13.17.2 Shower groups

Shower groups may drain individually, as fixture pairs in accordance with Clause 6.4.4 or to a common channel.

13.17.3 Common channels

Common channels shall—

(a) be graded to the outlet; and

(b) discharge through a removable grate, trap and discharge pipe as specified in Table 13.17.3.

TABLE 13.17.3

SIZE OF SHOWER DRAINAGE CHANNEL OUTLETS

Numbers of showers	Sizes of grate DN	Size of trap and discharge pipe DN
1	80	40
2 or 3	80	50
4 to 6	100	65

13.18 SINKS

13.18.1 Kitchen sinks

Kitchen sinks shall be connected using a fixture trap and waste pipe not smaller than DN 50 (or DN 40-, New Zealand only) or as fixture pairs in accordance with Clause 6.4.4 directly to a stack, sanitary drain or overflow relief or disconnector gully.

Triple bowl domestic kitchen sinks shall be connected—

(a) as three single bowl sinks;

(b) as a fixture pair and one single bowl sink; or

(c) through a single fixture trap, provided the length of discharge pipe between the sink outlets and the fixture trap seal is not greater than 1.2 m.

13.18.2 Bar sinks

Bar sinks (domestic) shall be connected by—

(a) an untrapped waste pipe not smaller than DN 40 to a floor waste gully; or

(b) a trap and waste pipe not smaller than DN 40.

Bar sinks (commercial) shall be connected by—

(i) an untrapped waste pipe not smaller than DN 50 to a floor waste gully; or

(ii) a trap and waste pipe not smaller than DN 50.

13.18.3 Cleaners' sinks

Cleaners' sinks shall be connected to drains by—

(a) an untrapped waste pipe, not smaller than DN 50, to a floor waste gully; or

(b) a trap and waste pipe not smaller than DN 50.

13.18.4 Pot, utility and laboratory sinks

Pot, utility or laboratory sinks shall be connected using a trap and waste pipe not smaller than DN 50.

Pot, utility or laboratory sinks shall not be connected as fixture pairs.

NOTE: Trade waste discharge from pot, utility or laboratory sinks may require pre-treatment as determined by the network utility operator.

13.19 SLOP HOPPERS

13.19.1 Connection

Slop hoppers shall be connected directly to soil stacks or drains with a discharge pipe not smaller than DN 100.

13.19.2 Installation

Slop hoppers shall be securely fixed.

13.20 INSTRUMENT STERILIZERS AND AUTOCLAVES

Instrument sterilizers and autoclaves shall discharge over a tundish installed in accordance with Clause 13.21.

13.21 CONNECTION OF TUNDISHES

Tundishes may be connected—

(a) to a waste pipe not smaller than DN 25 in accordance with Clause 4.6.7.8;

(b) to a trapped waste pipe not smaller than DN 40 in accordance with Appendix ~~C~~B; or

(c) to a fixture trap.

When the tundish and discharge pipe is connected to a fixture trap—

(i) the connection shall be made above the level of the water seal; and

(ii) the top of the tundish shall be above the flood level rim of the fixture.

Pipes discharging over a tundish shall have an air gap of a size at least twice the internal diameter of the discharging pipe.

Tundishes shall be accessible.

13.22 DOMESTIC SWIMMING POOLS

The discharge pipe from swimming pools shall be installed in accordance with Clause 12.8.7.

C13.22 *Overflows from skimmer boxes of domestic swimming pools should discharge to a discharge point nominated by the authority having jurisdiction.*

The discharge from swimming pools to the sanitary plumbing and drainage system may require the approval of the network utility operator.

13.23 TROUGHS

13.23.1 Ablution

Ablution troughs shall be connected by—

(a) an untrapped waste pipe, not smaller than DN 40, to a floor waste gully; or

(b) a trap and waste pipe not smaller than DN 50.

13.23.2 Laundry

Laundry troughs shall be connected by—

(a) an untrapped waste pipe, not smaller than DN 40, to a floor waste gully; or

(b) a trap and waste pipe not smaller than DN 40.

13.24 URINALS

13.24.1 Slab type

Slab type urinals shall be connected directly to soil stacks or drains with a trap and discharge pipe not smaller than DN 65 for urinal walls up to 5 m in length. Where the urinal wall is more than 5 m in length, additional outlets shall be connected.

13.24.2 Wall-hung

13.24.2.1 *General*

The floor of a room containing one or more wall-hung urinals shall grade to a floor waste gully installed in accordance with Clause 4.6.7.

13.24.2.2 *Flushing wall-hung urinals*

Flushing wall-hung urinals (other than those with an integral trap) shall be connected to a trap not smaller than DN 40 (or DN 32, New Zealand only).

13.24.2.3 *Non-flushing (waterless) urinals*

Waterless wall-hung urinals with an integral cartridge seal or integral self-sealing mechanical device may be installed without an additional fixture trap or self-sealing mechanical device.

Prior to installing a waterless wall-hung urinal to an existing system, the materials of the pipes in the existing system shall be determined.

The undiluted discharge from the urinal shall not be transported through copper pipework.

13.24.3 Conversion to waterless urinals

Urinals shall not be converted into waterless urinals unless the requirements of Clauses 13.24.2.1 and 13.24.2.3 have been satisfied.

13.25 WASHING MACHINES

13.25.1 Clothes-washing machines

The pumped discharge from domestic clothes-washing machines shall be connected—

(a) over the rim or into the sud-saver connection of a laundry trough;

(b) into a trapped waste pipe not smaller than DN 40; or

(c) into trapped or untrapped waste pipe, not smaller than DN 40, connected to a floor waste gully.

NOTE: Trade waste discharge from commercial clothes-washing machines may require pre-treatment as determined by the network utility operator.

13.25.2 Domestic dishwashing machines

13.25.2.1 *Discharge*

The pumped discharge from domestic dishwashing machines shall be connected—

(a) into a trapped waste pipe not smaller than DN 40;

(b) above the water seal of a DN 50 trap fitted to the outlet of a kitchen sink; or

(c) through a domestic type food waste disposal unit.

NOTE: A typical domestic dishwashing machine connection is shown in Figure 13.25.2.1.

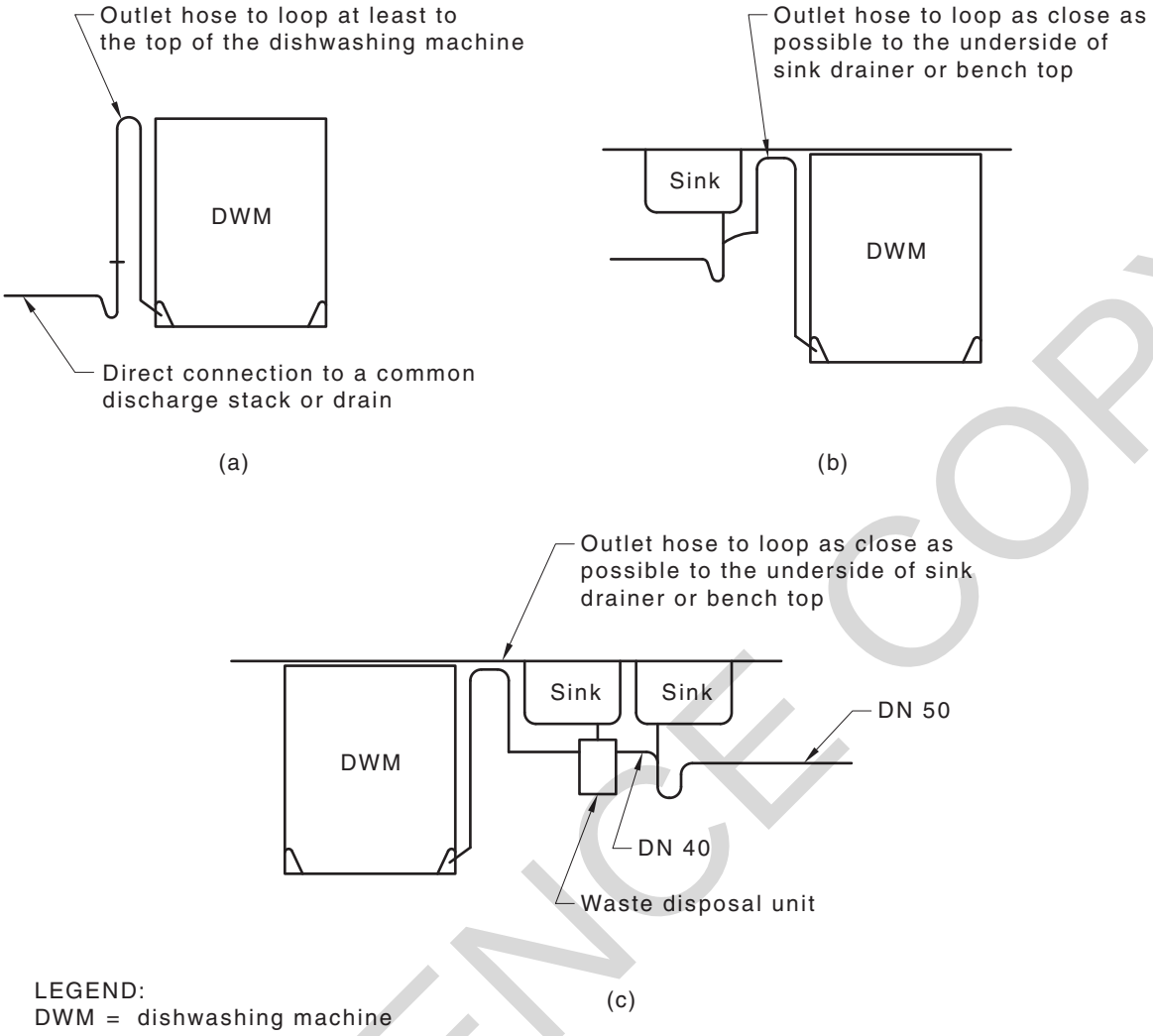

FIGURE 13.25.2.1 TYPICAL CONNECTIONS OF DOMESTIC DISHWASHING MACHINE

13.25.2.2 *Connection of outlet hose*

Outlet hoses of domestic dishwashing machines shall be connected in accordance with the following:

(a) Where the outlet hose is connected above the water seal of a sink trap, it shall be looped as close as possible to the underside of the sink drainer or benchtop before being extended downwards to the connection.

(b) If the trapped waste pipe to which the connection is made discharges directly to the drain, stack or common discharge pipe, the outlet hose shall be extended at least to the top of the dishwashing machine before looping downwards to the trapped waste pipe.

13.25.3 Commercial dishwashing machines

Commercial dishwashing machines shall be connected to a fixture trap and waste pipe not smaller than DN 50.

NOTE: Trade waste discharge from commercial dishwashers may require pre-treatment as determined by the network utility operator.

13.25.4 Glass-washing machines

Glass-washing machines shall be connected by—

(a) an untrapped waste pipe not smaller than DN 40 to a floor waste gully;

(b) a trap and waste pipe not smaller than DN 40; or

(c) a pump-out hose fitted in the same manner as domestic dishwashing machine.

NOTE: For connection of outlet hose, see Clause ~~13.25.2~~13.25.2.1.

13.26 UNTRAPPED FLOOR DRAINS

13.26.1 General

An untrapped floor drain may be installed for the purpose of draining wastewater spillage from a floor in case of overflow.

13.26.2 Restrictions on use

An untrapped floor drain shall not be—

(a) connected to any stack or discharge pipe that connects directly to the drain; or

(b) installed in any room that contains a urinal.

13.26.3 Installation

Each untrapped floor drain shall—

(a) be fixed and supported in accordance with Clause 10.2;

(b) have a removable grate of at least DN 40; and

(c) be connected to a separate, graded discharge pipe of at least DN 40.

13.26.4 Termination of discharge pipe

The outlet from an untrapped floor drain shall be located so that the discharge cannot cause damage or be a nuisance, and shall terminate either—

(a) internally over a tundish connected to a floor waste gully, in accordance with Clause 4.6.7.8; or

(b) externally with a flap and within 100 mm above finished surface level.

13.27 WATER CLOSET PANS

13.27.1 Connection

Water closet pans shall be connected directly to soil stacks or sanitary drains with a discharge pipe not smaller than DN 80.

13.27.2 Installation

Water closet pans shall be securely fixed by—

(a) bedding no thicker than 20 mm;

(b) brackets; or

(c) corrosion-resistant fasteners.

SECTION 14 MULTI-UNIT DEVELOPMENTS

14.1 SCOPE OF SECTION

This Section specifies minimum requirements for the main lines of a sanitary drain located in a multi-unit development of three or more residential buildings.

NOTE: Where two or more Class 1 dwellings are located under the same roof, each individual dwelling is considered to be an individual building.

14.2 METHODS OF DESIGN

14.2.1 General

In a multi-unit development, provision shall be made for an inspection shaft, an overflow relief gully and an open upstream vent, as specified in Clause 14.2.3, at each individual residential building.

NOTE: Solutions for design of multi-unit developments are also set out in the Sewerage Code of Australia.

14.2.2 Maintenance shafts

In multi-unit developments of 20 or more residential buildings, a maintenance shaft having ready access at ground surface for drain clearing equipment and television inspection shall be provided on the main lines of the sanitary drainage system, at each change of direction and main line junctions. The spacing of maintenance shafts along straight sections shall not exceed 150 m.

NOTE: No additional inspection openings are required if openings are on the main line of sanitary drains where maintenance shafts are installed.

14.2.3 Inspection shafts and overflow relief gullies and open upstream vents at each individual residential building

In multi-unit developments, provision shall be made at each individual residential building for the following:

(a) An inspection shaft in accordance with Clause 4.4.2, immediately upstream of the junction with the main line of the sanitary drain.

(b) Additional overflow relief from sewerage surcharge.

(c) An open upstream vent.

NOTE: Provided protection against sewage overflow has been made as specified in Clause 4.6.6, any additional gully may have a lesser vertical separation than that specified in Clause 4.6.6.

SECTION 15 TESTING OF SANITARY PLUMBING AND SANITARY DRAINAGE INSTALLATIONS

15.1 GENERAL

This Section specifies requirements for the inspection and testing of sanitary plumbing and sanitary drainage installations.

NOTE: Testing of vacuum drainage systems is covered in Section 16.

All new, repaired or replaced sanitary plumbing and sanitary drainage installations shall be tested by hydrostatic, air pressure or vacuum testing to demonstrate that they are watertight. Testing shall be conducted prior to the placement of the trench fill (backfill).

Any defects shall be either repaired or replaced with pipes and fittings of a suitable material, and the repaired or replaced section retested until it ~~complies~~ conforms with this Section.

Sanitary fixtures shall be tested by subjecting them to normal use. After each test, the residual water seal in the trap of the fixture concerned or in any other trap connected to the same system shall, under normal operating conditions, retain a water seal of not less than 25 mm.

Where a water seal of not less than 25 mm cannot be retained under normal operating conditions, inspect the sanitary plumbing and drainage system to determine the cause and undertake modifications or repairs, or both, and retest the sanitary fixture until it ~~complies~~ conforms with this Clause.

In some cases it may be more cost-effective to renovate the existing drain using an approved trenchless rehabilitation technique, in which case the drain shall be tested and inspected after renovation.

Any renovation defects shall be either repaired or replaced with pipes and fittings of a suitable material and the repaired or replaced section retested and reinspected until it ~~complies~~ conforms with this Section.

NOTE: Where closed circuit television inspection of sanitary plumbing and drainage is required, it should be carried out in accordance with Appendix E.

15.2 HYDROSTATIC TEST (WATER TEST)

Where hydrostatic testing is used as a means for testing sanitary plumbing and sanitary drainage installations, non-drinking water may be used.

The sanitary plumbing and sanitary drainage shall be filled with water—

(a) for sanitary drainage, to a height of not less than 1 m above the soffit level at the highest point of the section being tested;

(b) for sanitary plumbing, to the spill level of the highest fixture or to the flood level of the lowest sanitary fixture, whichever is higher; and

(c) in either case, not exceeding 3 m at the lowest point of the test section.

The pressure shall be maintained without leakage for at least 15 min. The source of any leak shall then be ascertained and any defects repaired. The section under test shall then be retested.

NOTE: Where the authority having jurisdiction or the network utility operator has a water management strategy that prohibits the use of water for specific purposes or has instituted water restrictions, hydrostatic testing of pipework may not be permitted, in which case an air or vacuum test should be undertaken to verify that the sanitary plumbing and drainage pipework is satisfactory.

15.3 AIR PRESSURE TEST

15.3.1 Sealing inlets and outlets

All sanitary plumbing and drainage inlets, outlets and access openings shall be capped and sealed. Air shall be introduced slowly into the section being tested.

15.3.2 Air pressure test procedure

The air test procedure shall be as follows:

(a) Apply an initial test pressure of approximately 15 kPa to the section being tested.

(b) When approximately 15 kPa has been reached, shut off the air pump and supply valve.

(c) Allow the air pressure to stabilize for a minimum of 3 min while checking for leaks.

(d) After the pressure has stabilized, commence the test to allow the pressure to fall to 10 kPa and then begin recording the time and drop in pressure over the minimum test duration specified in Table 15.3.2.

TABLE 15.3.2

AIR PRESSURE AND VACUUM AIR TESTING ACCEPTANCE TIMES FOR 3 kPa PRESSURE CHANGE

Pipe size	Test, length~~,~~ m					
	50	100	150	~~120~~200	250	300
DN	Minimum test duration~~,~~ min					
100	2	2	2	2	3	3
150	3	3	3	6	6	6
225	4	5	8	10	13	15
300	6	9	14	18	23	29

15.3.3 Maximum pressure drop

The section of sanitary plumbing or sanitary drainage being tested shall not have a drop in pressure greater than 3 kPa over the minimum test duration specified in Table 15.3.2.

15.4 VACUUM TEST

15.4.1 Sealing inlets and outlets

All sanitary plumbing and drainage inlets, outlets and access openings shall be capped and sealed.

15.4.2 Vacuum test procedure

The vacuum test procedure shall be as follows:

(a) Apply an initial vacuum test pressure of approximately 15 kPa to the section being tested.

(b) When approximately 15 kPa has been reached, shut off the vacuum pump and supply valve.

(c) Allow the vacuum to stabilize for a minimum of 3 min while checking for leaks.

(d) After the pressure has stabilized, commence the test to allow the vacuum to fall to 10 kPa and then begin recording the time and drop in vacuum over the minimum test duration specified in Table 15.3.2.

15.4.3 Maximum vacuum drop

The section of sanitary plumbing or sanitary drainage being tested shall not have a drop in vacuum greater than 3 kPa over the minimum test duration specified in Table 15.3.2.

SECTION 16 VACUUM DRAINAGE DESIGN AND INSTALLATION

16.1 SCOPE OF SECTION

This Section specifies the design and installation requirements and the components of a vacuum drainage system within a property for the removal of wastewater from the collection points to the discharge point connecting to the sanitary drainage system.

NOTES:

1 This Standard specifies the installation requirements for new systems and alterations and additions to existing systems. Care should be taken that any alteration or addition may have an impact on plant requirements and this should be taken into consideration prior to any works.

2 See Clause 16.4.2 for temperature limitations in vacuum drainage systems.

16.2 DEFINITIONS

16.2.1 Buffer

A container for the temporary collection of wastewater on the atmospheric side of a vacuum interface valve.

16.2.2 Soil fixture interface valve unit

An assembly which consists of a vacuum interface valve, a rinse valve, a vacuum controller and actuator, which forms part of the vacuum soil fixture.

16.2.3 Vacuum accumulative lift

Sum of all increases in invert levels on the pathway for the drainage from any VWC or buffer to the vacuum station.

16.2.4 Vacuum automatic interface unit (VAIU)

An assembly consisting of a vacuum interface valve, buffer, sensor and vacuum controller.

16.2.5 Vacuum batch volume

Volume of wastewater discharge from the buffer or water closet during one cycle of the vacuum interface valve.

16.2.6 Vacuum branch pipeline

A section of pipeline that connects one or a number of VWC pans and/or vacuum automatic interface units to the vacuum main pipeline.

16.2.7 Vacuum controller

A device which, when activated, opens the vacuum interface valve and the VWC rinse valve (if installed).

16.2.8 Vacuum drainage system

An assembly of pipes, fittings and apparatus used to collect and convey the discharge from fixtures to the sanitary plumbing or drainage.

NOTES:

1 A vacuum drainage system uses the pressure differential between ambient atmosphere (air) and sub-atmospheric pressure (partial vacuum) to create movement of air, soil and wastewater (discharge) through the pipeline to a point of discharge into sanitary plumbing or drainage.

2 A vacuum drainage system should not be confused with a vacuum sewerage system which is used by a network utility operator to transport sewage from multiple properties.

16.2.9 Vacuum generator

Equipment installed in the vacuum station to generate and maintain the operational vacuum level within the vacuum drainage system.

16.2.10 Vacuum interface valve

A device that acts as an interface between the vacuum pressure in the vacuum pipeline and the atmospheric pressure at the fixture or buffer. Interface valves automatically open when a predetermined volume of wastewater has collected in the buffer, or is actuated by means of button activation.

16.2.11 Vacuum lift

An increase in invert levels of the wastewater pathway from a vacuum soil fixture or VAIU to a vacuum branch or vacuum main pipeline.

16.2.12 Vacuum lift pipe

A vertical increase in elevation of the vacuum pipe invert level, achieved either with a vertical pipe configuration or a diagonal (typically 45°) configuration.

16.2.13 Vacuum loading units (VLU)

Unit of measurement of the load (air + wastewater) applied to a vacuum drainage system by various vacuum fixtures that are connected to the vacuum drainage system. It is used to size pipes for main lines and branch lines.

16.2.14 Vacuum main pipeline

A section of pipeline that connects one or more vacuum soil fixtures and/or vacuum automatic interface units to the vacuum station. Vacuum branch pipelines may be connected to the vacuum main pipeline.

16.2.15 Vacuum recovery time

Time taken, after the operation of a vacuum interface valve, for the vacuum level at the vacuum interface valve to be restored to its operational pressure range.

16.2.16 Vacuum reforming pocket

A pipe assembly creating a low point within the vacuum pipeline to collect wastewater and reform the batch volume. Vacuum reforming pockets are to be configured as an open or closed pocket.

16.2.17 Vacuum second stage lift

A lift in a vacuum branch line or vacuum main pipeline, distinguished from a reforming pocket in that the downstream end of the lift are to be vertical.

16.2.18 Vacuum sensor

A device that detects the presence of a pre-determined level of wastewater in a buffer, which results in a vacuum controller activating the vacuum interface valve to evacuate the wastewater from the buffer.

16.2.19 Vacuum soil fixture rinse valve

A control valve designed to rinse and replenish the water in the vacuum soil fixture.

16.2.20 Vacuum station

Installation comprising a vacuum generator(s), control equipment and a means of waste discharge (forwarding pump or gravity outlet), and which may also incorporate vacuum wastewater collecting tank(s).

16.2.21 Vacuum station forwarding pump

A pump which may be installed at the vacuum station to deliver the wastewater from the vacuum system to a connection to the gravity plumbing or drainage system that discharges to the sewer.

16.2.22 Vacuum water closet (VWC) pan

A VWC pan with a matching assembly of vacuum interface valve, rinse valve, controller, and actuator.

16.3 MATERIALS AND PRODUCTS FOR VACUUM DRAINAGE SYSTEMS

16.3.1 Pipes and fittings for vacuum drainage applications

Vacuum pipelines shall be constructed of one of the following:

(a) PVC-U pressure pipe and fittings with a minimum pressure rating of PN 10 in accordance with AS 1477, ASTM D1785 Schedule 40/80 and ASTM D1785 or CSA B181.2.

(b) PVC-U DWV pipe and fittings in accordance with AS/NZS 1260. Pipes of diameters equal to or greater than DN 100 shall have a pipe stiffness classification of not less than SN8.

(c) Polyethylene pipes and fittings with a maximum standard dimension ration (SDR) 17 in accordance with AS/NZS 4130 and AS/NZS 4129 respectively.

(d) Stainless steel (SS) pipes and push fit ring seal fittings in accordance with AS 3495 or ASTM A269/A269M-15M.

16.4 SYSTEM DESIGN

16.4.1 General

A vacuum drainage system is designed to collect and transport soil and wastewater from vacuum soil fixtures and waste fixtures.

The following components comprise a typical vacuum drainage system:

(a) Vacuum station—provides and maintains the vacuum pressure within the piping network.

(b) Vacuum piping network.

(c) Vacuum soil fixtures.

(d) Vacuum automatic interface unit for wastewater fixtures.

NOTE: See Figures 16.4.1(A) and 16.4.1(B) for examples of vacuum drainage systems.

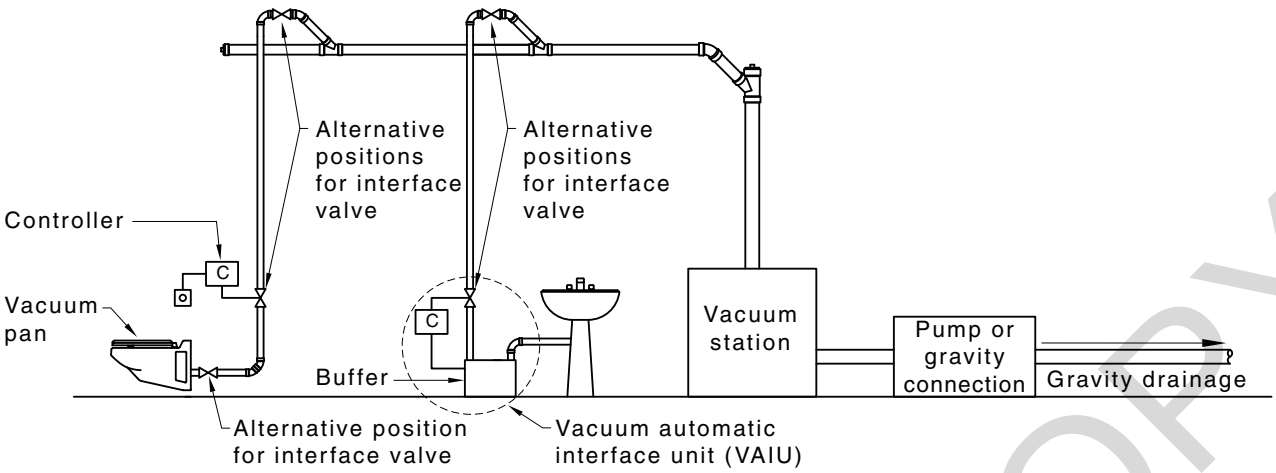

FIGURE 16.4.1(A) TYPICAL SINGLE LEVEL VACUUM DRAINAGE SYSTEM

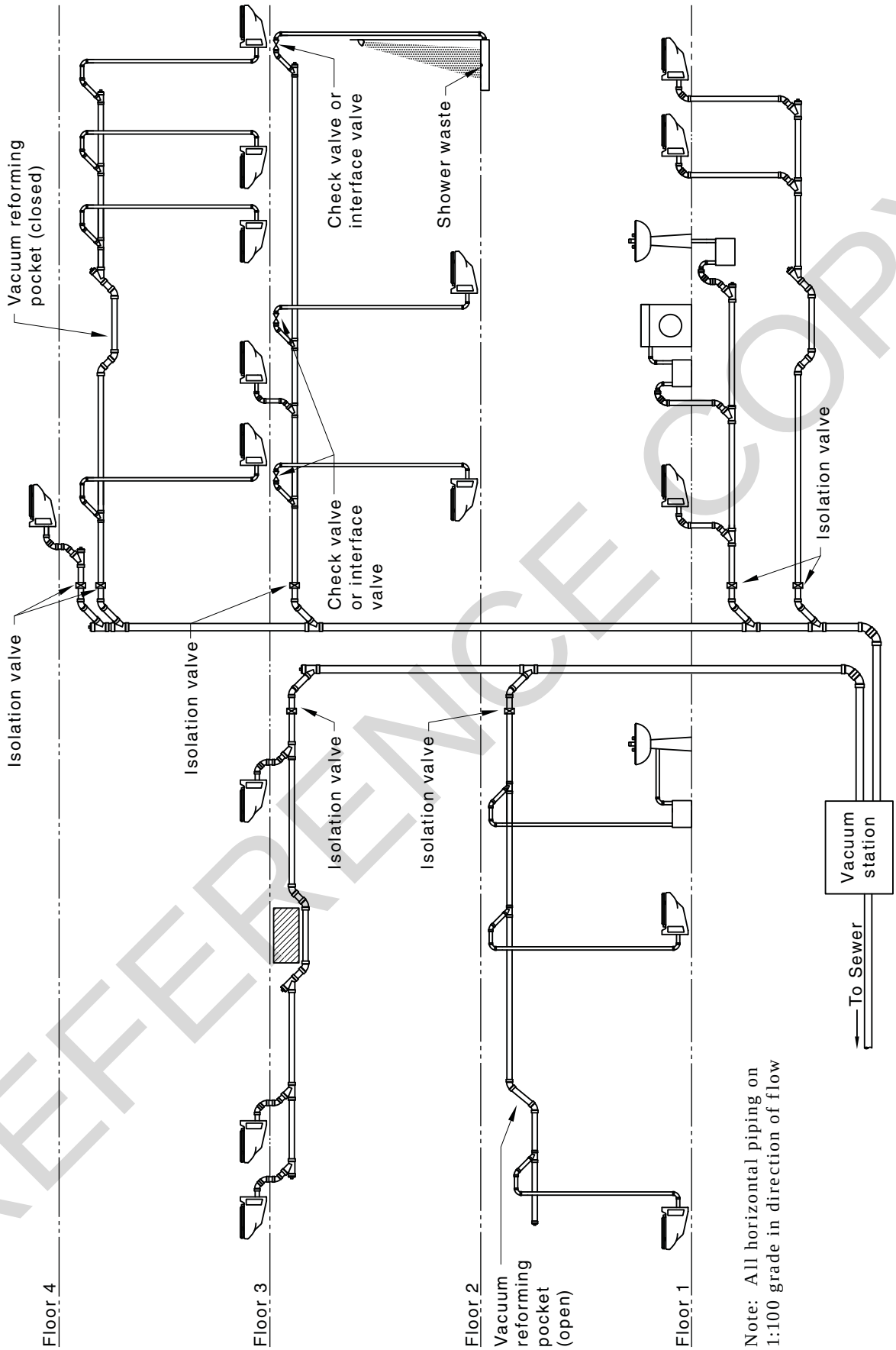

FIGURE 16.4.1(B) TYPICAL MULTI-LEVEL VACUUM DRAINAGE SYSTEM

16.4.2 Design requirements

A vacuum drainage system shall conform with the following:

(a) The operating static pressure shall be between –35 kPa and –70 kPa throughout the system, except for vacuum generator over-run time periods (usually less than 2 min).

(b) The accumulative vacuum lift shall not exceed 6.0 m.

NOTE: See Figure 16.4.2.

(c) The pipework shall not include 90° junctions.

(d) At changes of direction in the pipework, the bend radius shall be at least twice the pipe diameter.

(e) The pipework shall have no more than one 90° change of direction between inspection openings.

(f) The maximum temperature of wastewater conveyed shall not exceed 60°C at any point.

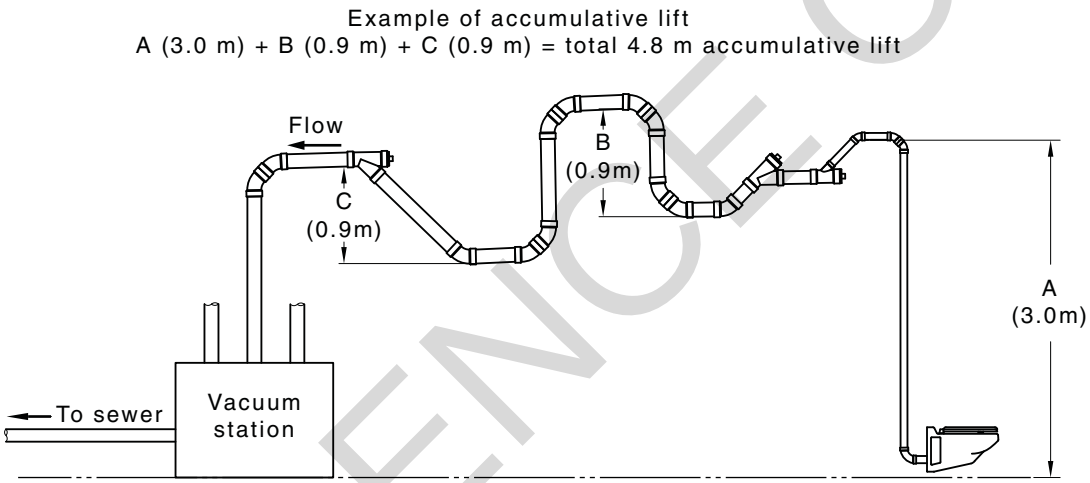

FIGURE 16.4.2 MAXIMUM ACCUMULATIVE LIFT EXAMPLE

16.4.3 Vacuum recovery

The minimum vacuum pressure should be maintained during operational conditions at every vacuum interface valve except for a maximum of 10 s following interface valve actuation.

16.4.4 Vacuum pipework

The pipework shall transport the air and wastewater, including solids, from vacuum automatic interface unit's and vacuum soil fixtures to the vacuum station.

The pipework shall be airtight and watertight when tested.

NOTE:See Clause 16.16 for testing of vacuum drainage systems.

16.4.5 Vacuum pipe sizing

Vacuum pipelines shall be sized in accordance with Appendix F to accommodate the maximum continuous flow. Discharge pipes draining to buffers shall be sized in accordance with Clause 8.3. Soil vacuum fixtures shall be directly connected to the vacuum pipeline.

NOTES:

1 Soil vacuum fixtures connected to a vacuum system should conform with SA TS-100.

2 See Figure 16.4.5 for sizing examples.

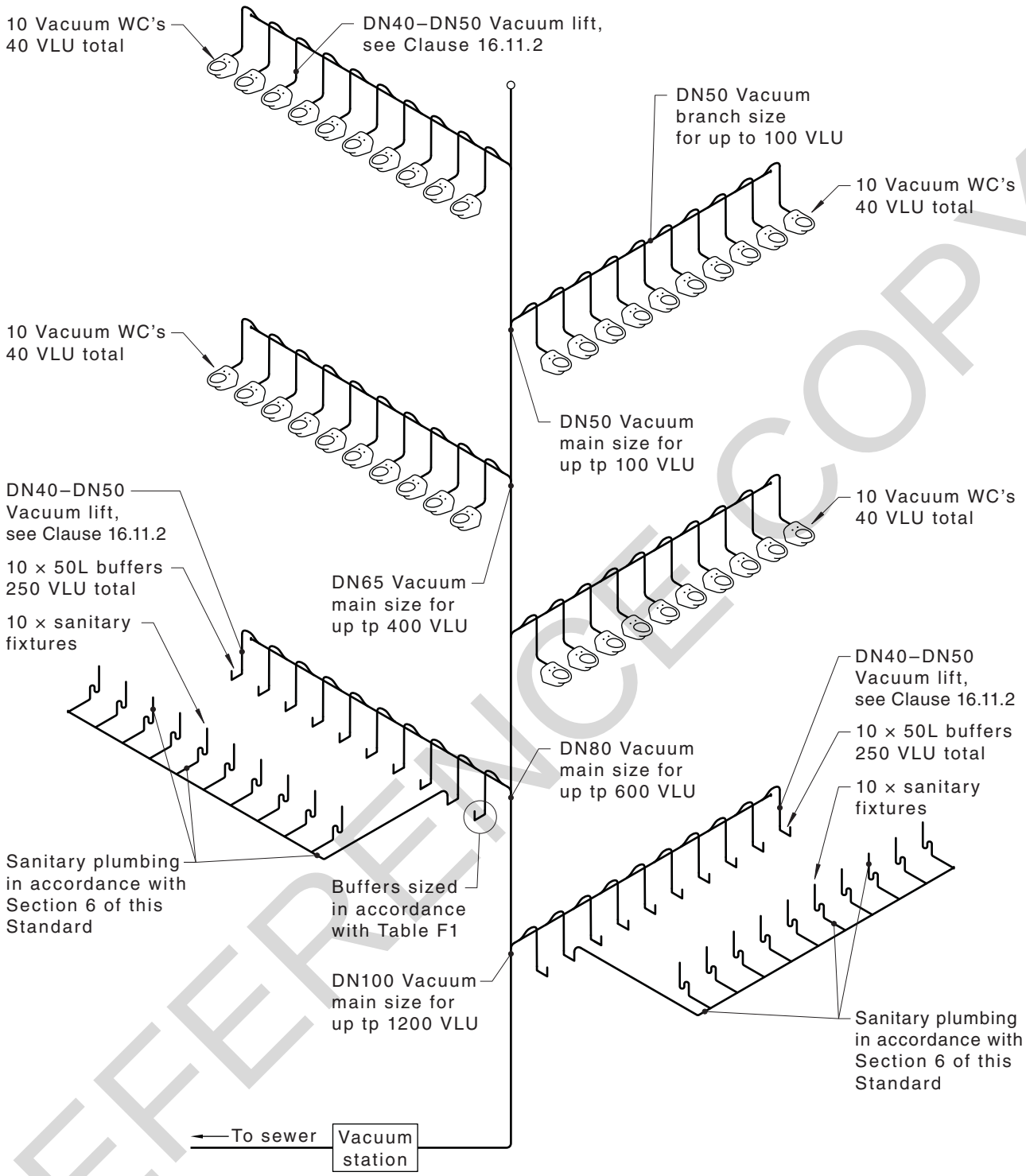

FIGURE 16.4.5 EXAMPLE OF SIZING

16.4.6 Location of vacuum pipes

Any vacuum pipe located under or inside a building shall only serve fixtures within that building.

NOTE: Vacuum pipework in the ground should be located externally to the building, wherever practical.

16.4.7 Eccentric tapered fittings

Eccentric tapered fittings shall be in common alignment with the soffit of the pipe to which it is connected except where connected to a buffer.

16.4.8 Change in pipe size

Pipes shall not diminish in size in the direction of flow.

Lift pipes shall not change size from the VAIU or vacuum soil fixture before they connect to the main vacuum pipe or a branch vacuum pipe.

16.4.9 Grades of vacuum pipes

Vacuum pipes shall be not less than 1% grade in the direction of flow (see Figure 16.4.9).

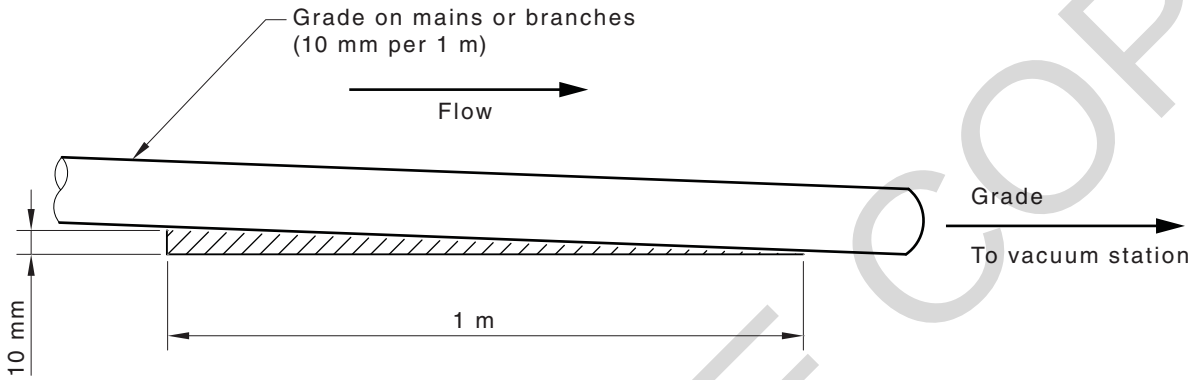

FIGURE 16.4.9 GRADE IN DIRECTION OF FLOW

16.5 INSPECTION OPENINGS (IO)

16.5.1 Location and installation requirement

Pipework in the vacuum system shall be provided with inspection openings in the following locations:

(a) Upstream end of all graded pipework.

(b) Top of all vertical droppers.

(c) Top (downstream) end of all open lifts.

(d) At maximum intervals of 30 m in graded pipe.

(e) Upstream end of any graded pipe receiving waste from a dropper.

(f) Upstream end of a closed reforming pocket.

(g) Wherever necessary for testing purposes (see Clause 10.5.2).

NOTE: See Figure 16.5.1.

A removable interface valve which serves a soil fixture or a buffer, may be used as an inspection opening provided it is located within 500 mm of a junction connection to a vacuum branch or main pipeline.

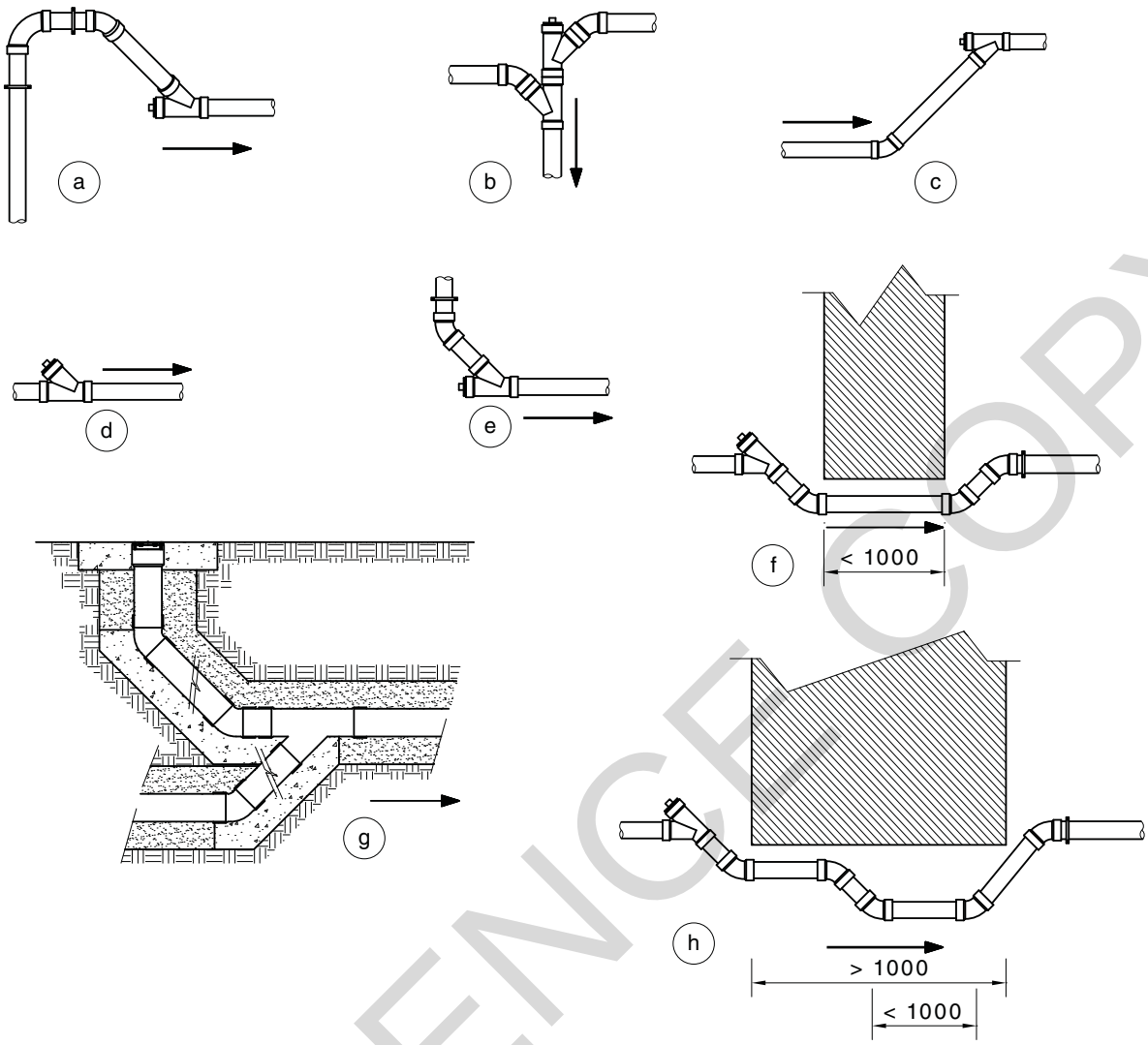

FIGURE 16.5.1 TYPICAL LOCATIONS OF INSPECTION OPENINGS

16.5.2 Size

The minimum size of the inspection opening in vacuum drainage pipelines shall be equal to the nominal size of the pipe up to DN 80. Pipe sizes greater than DN 80 shall have a minimum DN 100 inspection opening.

16.5.3 Access to inspection openings

The following applies to accessing inspection openings:

(a) Inspection openings, where raised to ground level or floor surface level, shall be provided with airtight removable caps and protected by a cover and surrounded in such a manner that no traffic or structural load can be transmitted to the vacuum drainage pipe.

(b) When located in a concealed location, inspection openings shall be provided with a removable access panel.

16.5.4 Sealing

Inspection openings shall be sealed with plugs or caps fitted with a gasket or sealing ring.

Unused sockets shall be sealed with caps.

When a plug or cap with a rubber ring or gasket is removed, a new rubber ring or gasket shall be fitted.

16.6 CONNECTIONS TO VACUUM SYSTEM

Connections to a vacuum system shall be as follows:

(a) Flexible connections in accordance with AS/NZS 4327 when connecting from vacuum soil fixtures.

(b) Flexible connections in accordance with AS/NZS 4327 or sealed threaded joints in the relevant material when connecting discharge pipes or drains to buffers.

NOTE: See Figure 16.6 for typical connection of gravity drainage to vacuum drainage buffer.

(c) Flanged connections in accordance with Clause 2.6.1 when connecting the vacuum station to the downstream drain or sewer.

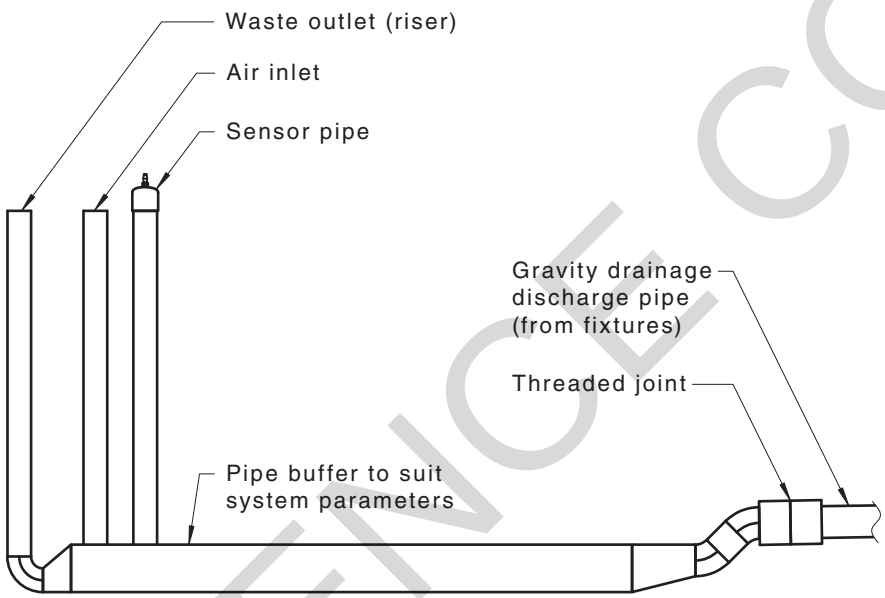

FIGURE 16.6 TYPICAL CONNECTION OF GRAVITY DRAINAGE TO VACUUM DRAINAGE BUFFER

16.7 CONNECTIONS WITHIN A VACUUM SYSTEM

Flexible connections in accordance with AS/NZS 4327 shall be provided in the following locations:

(a) Inlet and outlet of a vacuum buffer or vacuum soil fixture, interface valve unit.

(b) Connection to a vacuum soil fixture.

(c) Connection of the vacuum main pipeline to a vacuum station.

16.8 VACUUM AUTOMATIC INTERFACE UNIT (VAIU)

Vacuum automatic interface units, with the exception of the buffer, shall be—

(a) accessible; and

(b) have access to ambient air.

16.9 BUFFERS

16.9.1 General

Buffers shall be either box type, fabricated from stainless steel, or pipe type, fabricated from piping materials listed in accordance with Clause 16.3.1. Buffers shall incorporate the following requirements within their design:

(a) Sensor pipe.

(b) Air inlet.

(c) Gravity drainage inlet.

(d) Vacuum waste outlet.

NOTE: See Figure 16.9.1 for examples of buffers.

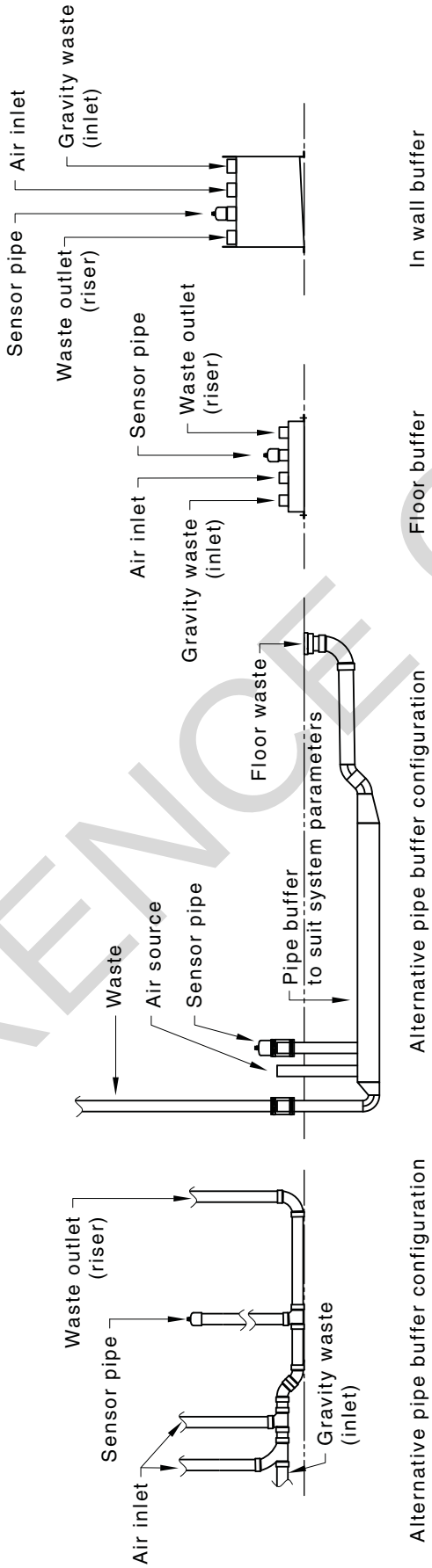

FIGURE 16.9.1 EXAMPLES OF BUFFERS

16.9.2 Sizing

Buffers shall be sized based on the maximum potential waste inflow from all fixtures that drain to the buffer in accordance with Table F1.

16.10 VACUUM SOIL FIXTURES

16.10.1 General

Vacuum soil fixtures shall—

(a) have access to ambient air; and

(b) be provided with access to ambient air via the secondary safety air inlet port(s).

Vacuum interface valves, vacuum soil fixture rinse valves, vacuum controller and actuator shall be accessible.

16.10.2 Vacuum soil fixture backflow prevention

Backflow prevention for vacuum soil fixture rinse valves shall be in accordance with AS/NZS 3500.1 Section 4.

16.11 VACUUM LIFT PIPE

16.11.1 Vacuum soil fixture lift pipe

Each vacuum soil fixture shall be provided with a vacuum lift pipe of DN 40–DN 50 in diameter, connected to a vacuum main or branch pipe (see Figure 16.11.1).

NOTES:

1 DN 40 is preferred when available in the material selected.

2 If a branch line has fixture connections from below and above it, or if there are fixture connections on the same branch line following a second stage lift, the lifts from below or those preceding the second stage lift, should include either a vacuum check valve or vacuum interface valve at the highest point of the lift upstream of the slope junction connection [see Figure 16.4.1(B)].

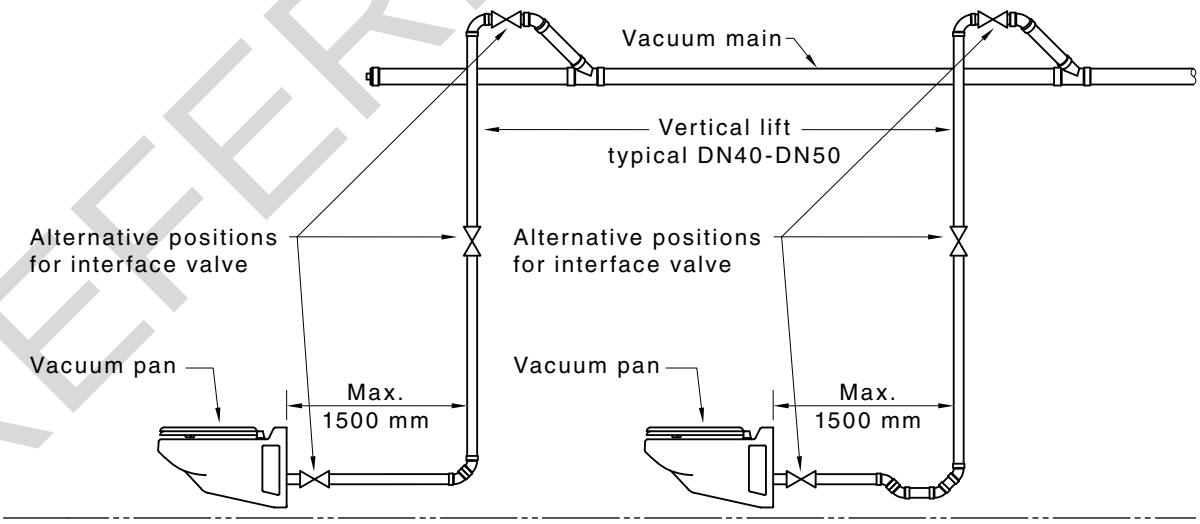

FIGURE 16.11.1 ALTERNATIVE LIFT PIPE FOR VACUUM SOIL FIXTURE

16.11.2 Vacuum lift pipe connected to Vacuum Automatic Interface Unit

Vacuum lift pipe connected to Vacuum Automatic Interface Unit shall have the following:

(a) A maximum horizontal distance from the Vacuum Automatic Interface Unit of 1500 mm.

(b) A maximum of one horizontal offset of up to 300 mm in any vacuum lift pipe and shall be achieved using two 45° bends.

(c) Offsets greater than 300 mm shall discharge horizontally and grade into a collection pocket before resuming vacuum lift.

(d) Diameters between DN 40–DN 50.

NOTES:

1 DN 40 is preferred when available in the material selected.

2 See Figure 16.11.2 for typical arrangements for vacuum automatic interface unit lift pipe.

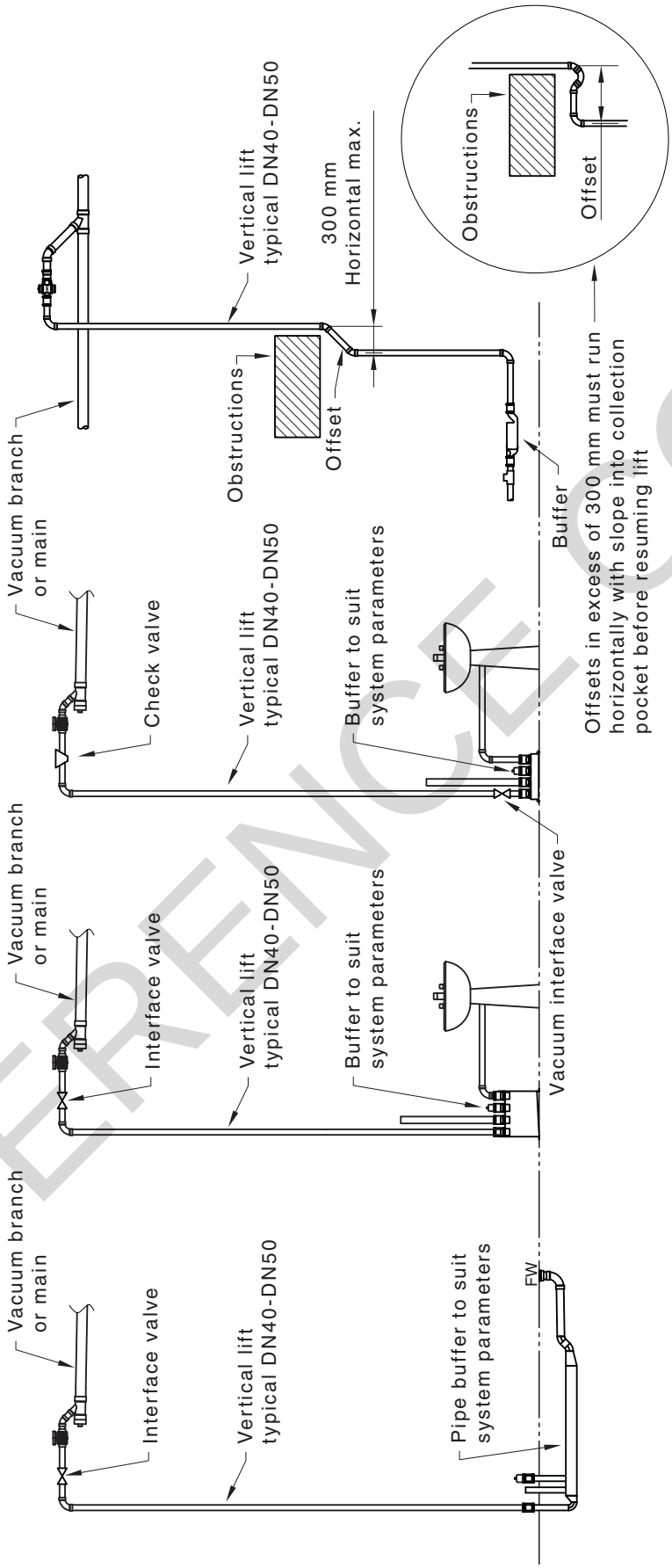

FIGURE 16.11.2 TYPICAL ARRANGEMENTS FOR VACUUM AUTOMATIC INTERFACE UNIT LIFT PIPE

16.11.3 Vacuum lift pipe connection to horizontal vacuum pipe

Vacuum lift pipes connecting to a horizontal vacuum branch or main pipeline shall—

(a) connect to the soffit of a horizontal vacuum pipe with a 45° junction in the direction of flow;

(b) not be connected to a horizontal vacuum pipe in a location that holds water;

(c) rise a minimum of 80 mm above soffit of the horizontal vacuum pipe it is connecting to; and

(d) not less than 150 mm between vacuum lift pipe connections on a common horizontal vacuum pipe.

NOTE: Connecting 45° junctions may be rolled to either side a maximum of 45° from the vertical plane (see View X-X of Figure 16.11.3).

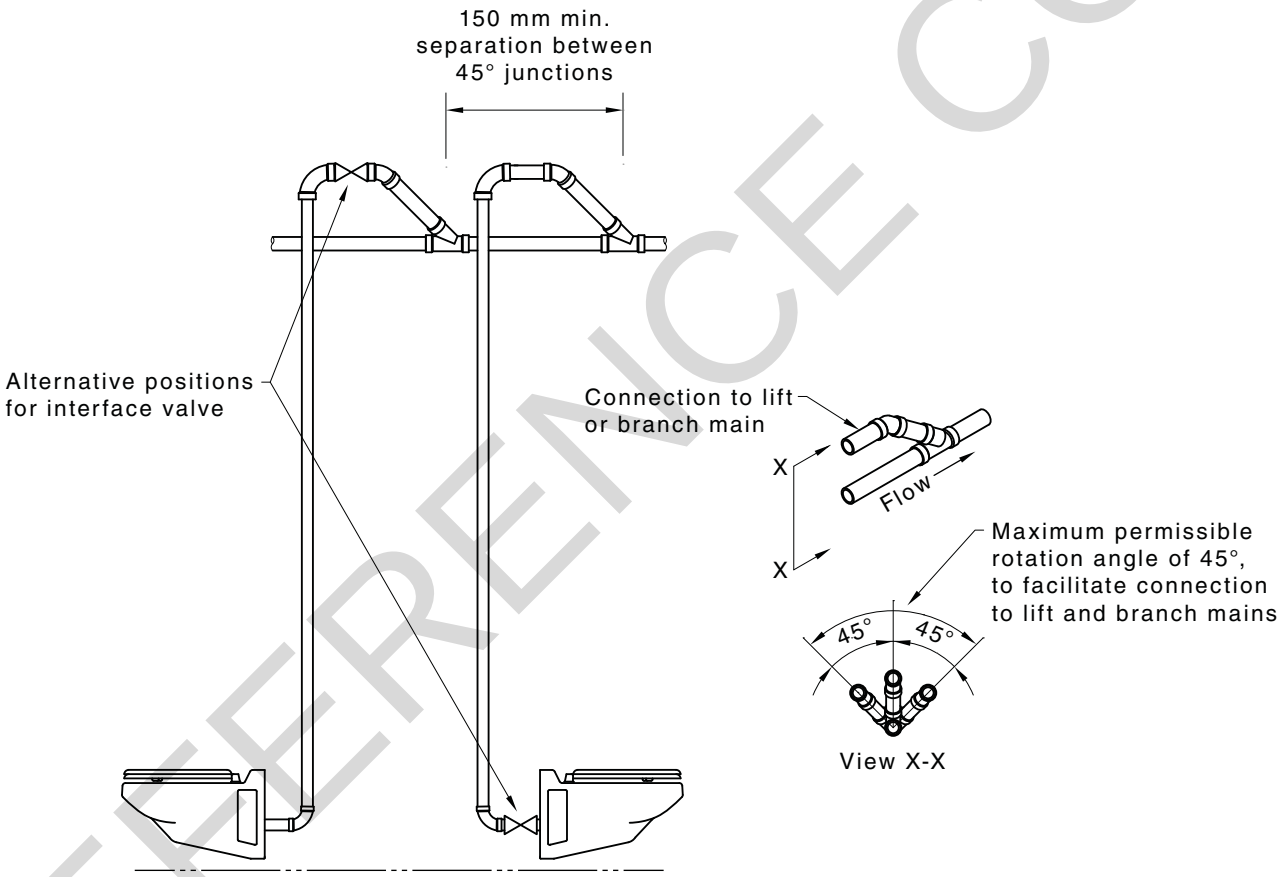

FIGURE 16.11.3 EXAMPLE OF VACUUM LIFT PIPES CONNECTING TO HORIZONTAL VACUUM PIPES

16.11.4 Two-stage lift pipe

When a branch line incorporates a second stage lift, the first stage lift shall be in accordance with Clauses 16.11.1, 16.11.2 and 16.11.3. The second stage lift pipe shall be—

(a) DN 40 or DN 50;

(b) vertical;

(c) a maximum of 2 m; and

(d) installed with a vacuum reforming pocket when greater than 900 mm [see Figure 16.11.4(A)].

The horizontal branch between the first stage lift and a second stage lift shall—

(i) include connections with a maximum vacuum loading unit value not exceeding 20 (see Table F2); and

(ii) not include a connection further than 20 m from the base of the second stage lift.

NOTE: A second stage lift of less than 900 mm in height does not require a vacuum reforming pocket [see Figure 16.11.4(B)].

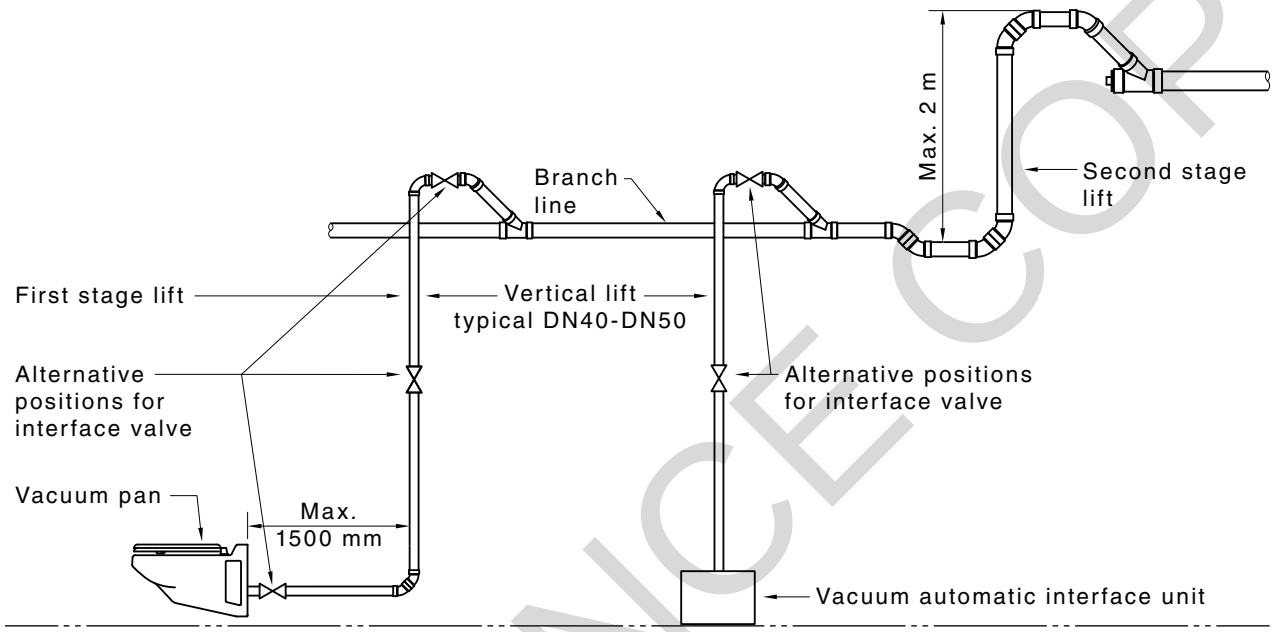

FIGURE 16.11.4(A) SECOND STAGE LIFT ABOVE 900 mm

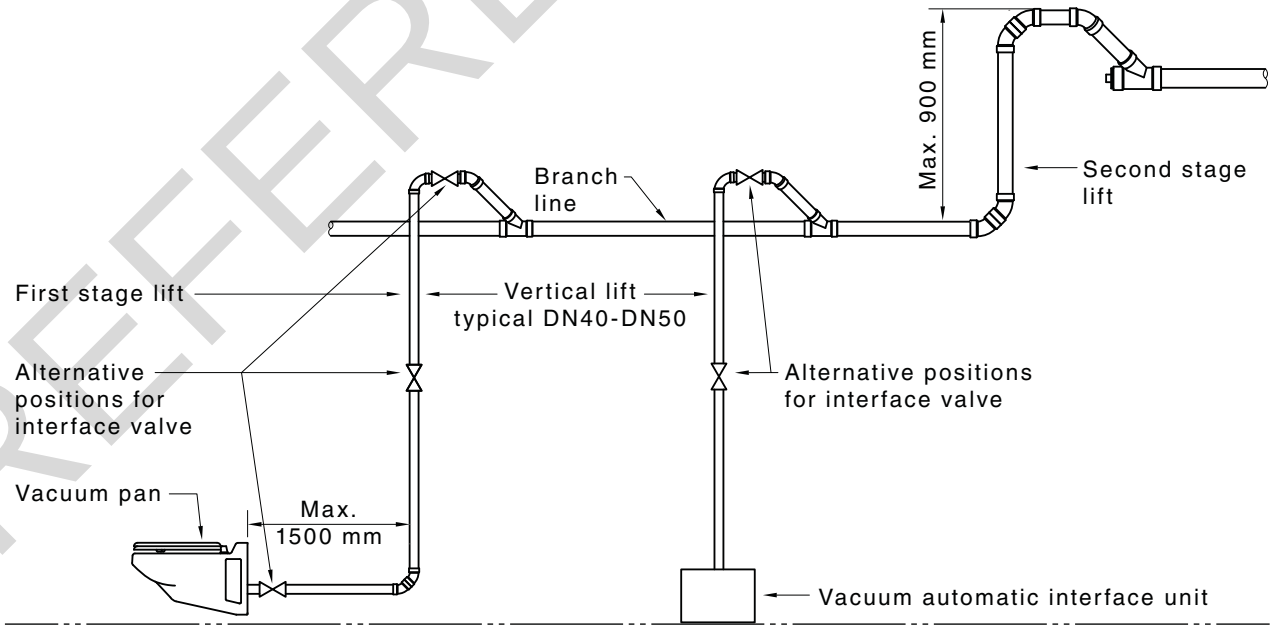

FIGURE 16.11.4(B) SECOND STAGE LIFT BELOW 900 mm

16.12 VACUUM REFORMING POCKET

16.12.1 General

Reforming pockets shall be installed at low points within the graded vacuum pipework.

Reforming pockets, either open type or closed type, shall be located within vacuum pipelines—

(a) at the base of every vertical lift (see Figure 16.12.2 for open type); and

(b) at maximum intervals in horizontal main and branch pipelines in accordance with Table 16.12.1.

NOTE: See Figures 16.12.2 and 16.12.3 for typical vacuum reforming pockets.

TABLE 16.12.1

MAXIMUM DISTANCE (m) BETWEEN REFORMING POCKETS IN HORIZONTAL PIPING

Type of vacuum pocket	Nominal size of vacuum pipeline DN				
	50	80	100	150	200
Open	55	55	60	60	80
Closed	20	25	30	30	30

16.12.2 Open type vacuum reforming pocket

Open type vacuum reforming pockets shall—

(a) be constructed of 45° bend and 45° junction;

(b) have a maximum height of 900 mm;

(c) be supported at each end of the vacuum reforming pocket; and

(d) include an inspection opening on the downstream end (top) of the vacuum reforming pocket.

NOTE: See Figure 16.12.2 for typical open type vacuum reforming pocket.

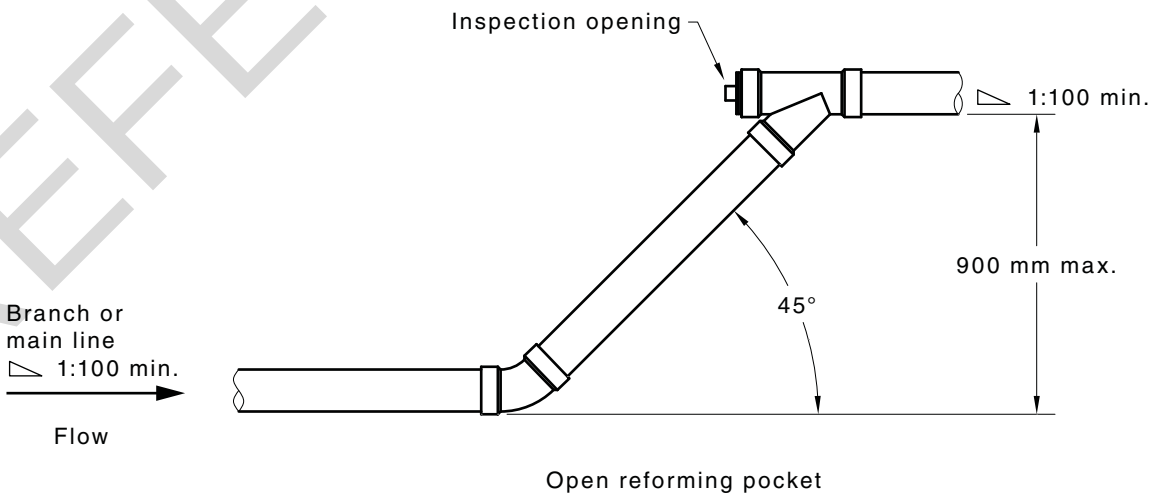

FIGURE 16.12.2 TYPICAL OPEN TYPE VACUUM REFORMING POCKET

16.12.3 Closed type vacuum reforming pocket

Closed type vacuum reforming pockets shall—

(a) be constructed of 45° bends and 45° junction;

(b) be a minimum of 600 mm in length;

(c) have a minimum waste water storage depth of 60 mm;

(d) include an inspection opening on the upstream end of the vacuum reforming pocket; and

(e) be supported at each end of the vacuum reforming pocket.

NOTE: See Figure 16.12.3 for typical closed type vacuum reforming pocket.

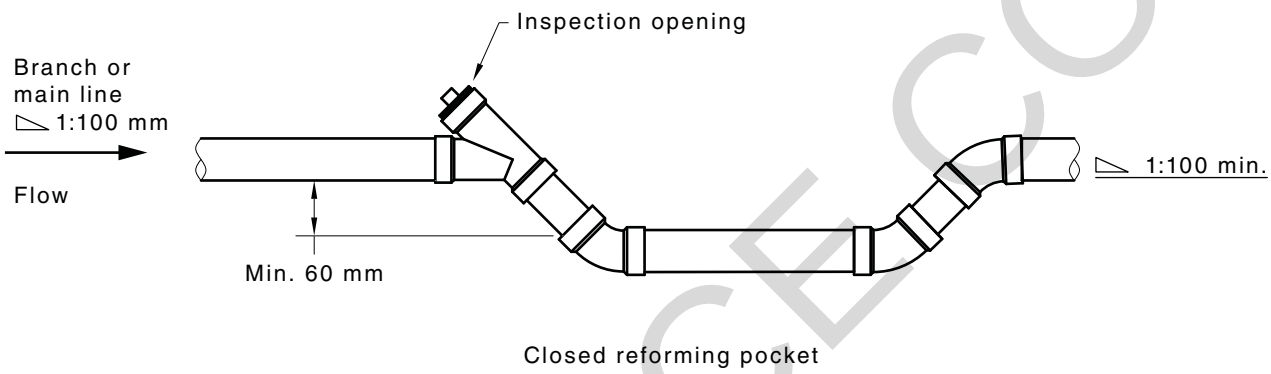

FIGURE 16.12.3 TYPICAL CLOSED TYPE VACUUM REFORMING POCKET

16.13 VACUUM BRANCH CONNECTIONS

Vacuum branch connections shall—

(a) connect from above to the soffit of a horizontal vacuum main pipe with a 45° junction in the direction of flow;

(b) not be located within 500 mm of a change of direction (bend) in the main;

(c) connect to the vacuum main dropper with a full bore isolation valve at each floor level for multi-level systems; and

(d) be braced bilaterally on each side of the 45° junction within 500 mm (see Figure 16.14.2).

NOTE: See Figure 16.13 for typical vacuum branch connections.

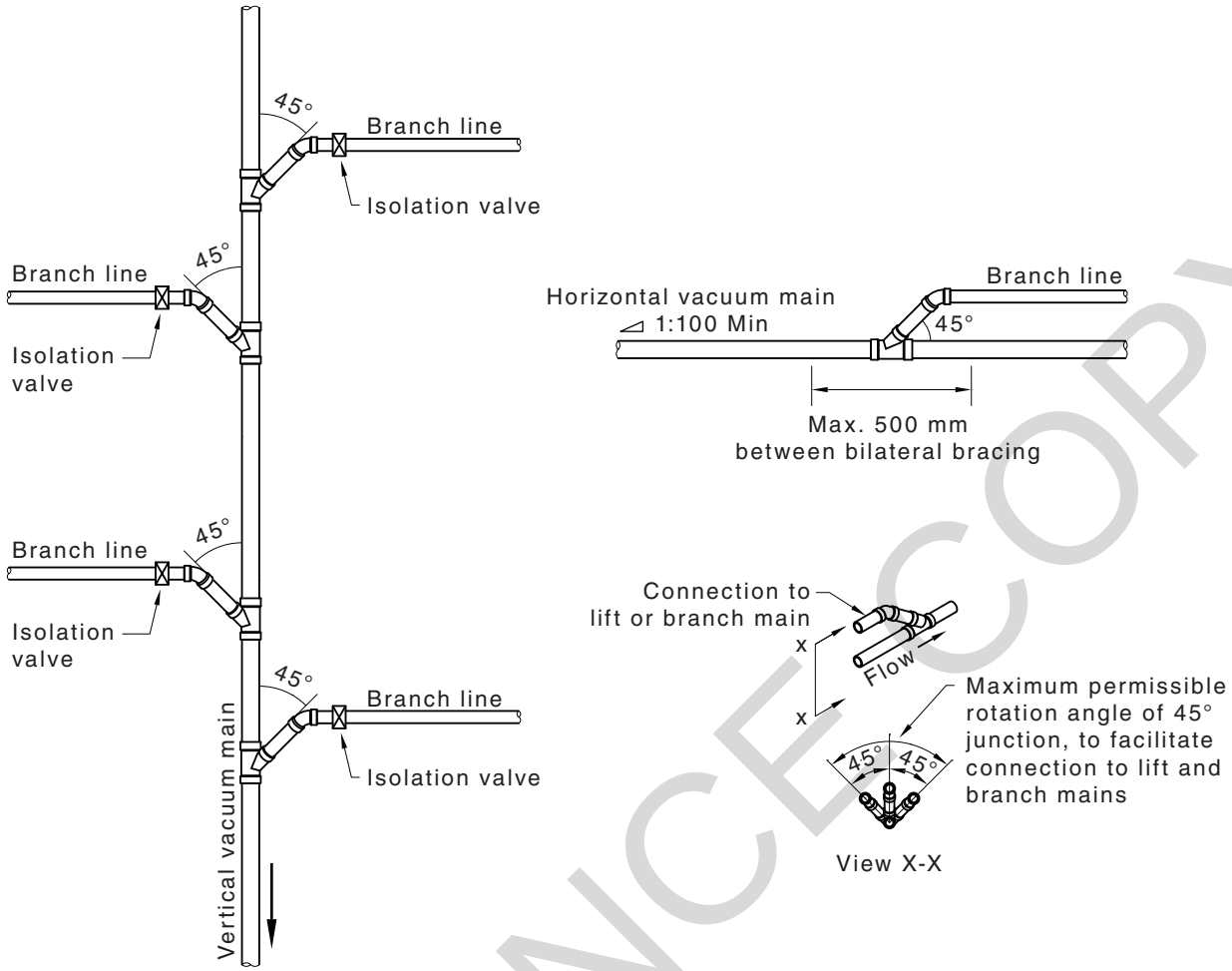

FIGURE 16.13 TYPICAL VACUUM BRANCH CONNECTIONS TO A VERTICAL OR HORIZONTAL VACUUM MAIN PIPELINE

16.14 VACUUM PIPES INSTALLED ABOVE GROUND

16.14.1 General

Vacuum drainage pipes shall be installed in accordance with Clauses 3.6, 10.2, 10.3, 10.4, 10.7, 10.8, 10.9, 10.10 and 10.13.

16.14.2 Bracketing and supports

In addition to Clause 16.14.1, vacuum drainage pipes shall have bilateral bracing within 500 mm each side of change of direction or branch connection (see Figure 16.14.2).

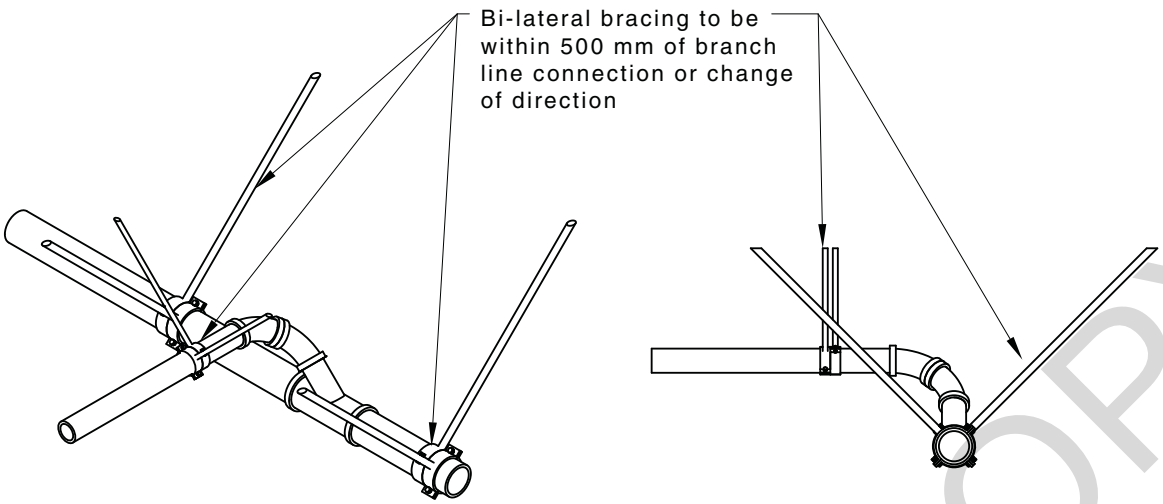

FIGURE 16.14.2 BILATERAL BRACING DETAILS

16.14.3 Stainless steel pipes

Brackets and supports for stainless steel pipes shall be installed at intervals in accordance with AS/NZS 3500.1, Clauses 5.6.3 and 5.6.4.

16.14.4 Securing of pipes and fittings

Any pipe or fitting that may be subjected to strain or torsion shall be positively fastened against twisting or any other movement.

16.15 VACUUM PIPES INSTALLED BELOW GROUND

16.15.1 General

Vacuum drainage pipes shall be installed in accordance with Clauses 3.4.4, 3.5, 3.6, 3.7, 3.8.1 and 3.8.2.

16.15.2 Anchor blocks

Anchor blocks shall be installed in accordance with Clause 3.4.4 at—

(a) all lifts in mainline exceeding 500 mm;

(b) changes of directions equal to or greater than 90°; and

(c) grades in excess of 20% (see Figure 3.4.4).

16.16 VACUUM TEST FOR VACUUM DRAINAGE SYSTEMS

16.16.1 Sealing inlets

All vacuum sanitary plumbing and drainage inlets, outlets and access openings shall be capped and sealed.

16.16.2 Vacuum test pressure

An initial vacuum test pressure of −55 ±5 kPa shall be applied to the section being tested. When −55 ±5 kPa has been reached, the vacuum pump and supply valve shall be shut off. The vacuum shall be allowed to stabilize for a minimum of 3 min while checking for leaks.

After the pressure has stabilized, commence the test by allowing the vacuum to fall to −50 kPa and then begin recording the time and drop in vacuum over the minimum test duration specified in Table 16.16.3.

16.16.3 Maximum vacuum drop

The section of sanitary plumbing or sanitary drainage being tested shall not have a drop in vacuum greater than –1 kPa over the minimum test duration specified in Table 16.16.3.

TABLE 16.16.3

VACUUM DRAINAGE SYSTEM VACUUM TESTING ACCEPTANCE TIMES FOR 1 kPa PRESSURE CHANGE

Pipe size DN	Test length m					
	50	100	150	200	250	300
	Minimum test duration min					
40	2	2	2	2	3	3
50	2	2	2	2	3	3
65	2	2	2	2	3	3
80	2	2	2	2	3	3
100	2	2	2	2	3	3
150	3	3	3	6	6	6
225	4	5	8	10	13	15
300	6	9	14	18	23	29

APPENDIX A

~~APPENDIX A~~

~~NORMATIVE REFERENCES~~

~~(Normative)~~

~~AS~~	
~~1074~~	~~Steel tubes and tubulars for ordinary service~~
~~1345~~	~~Identification of the contents of pipes, conduits and ducts~~
~~1379~~	~~Specification and supply of concrete~~
~~1432~~	~~Copper tubes for plumbing, gasfitting and drainage applications~~
~~1478~~	~~Chemical admixtures for concrete, mortar and grout~~
~~1478.1~~	~~Part 1: Admixtures for concrete~~
~~1566~~	~~Copper and copper alloys – Rolled flat products~~
~~1589~~	~~Copper and copper alloy waste fittings~~
~~1604~~	~~Specification for preservative treatment~~
~~1604.1~~	~~Part 1: Sawn and round timber~~
~~1631~~	~~Cast grey and ductile iron non-pressure pipes and fittings~~
~~1646~~	~~Elastomeric seals for waterworks purposes~~
~~1657~~	~~Fixed platforms, walkways, stairways and ladders – Design, construction and installation~~
~~1741~~	~~Vitrified clay pipes and fittings with flexible joints – Sewer quality~~
~~2129~~	~~Flanges for pipes, valves and fittings~~
~~3501~~	~~Parallel screw threads of Whitworth form (BSW and BSF) and associated gauges and gauging practice~~
~~3517~~	~~Capillary fittings of copper and copper alloy for non-pressure sanitary plumbing applications~~
~~3571~~	~~Plastics piping systems – Glass-reinforced thermoplastics (GRP) systems based on unsaturated polyester (UP) resin~~
~~3571.1~~	~~Part 1: Pressure and non-pressure drainage and sewerage (ISO 10467:2004, MOD)~~
~~3600~~	~~Concrete structures~~
~~3688~~	~~Water supply – Metallic fittings and end connectors~~
~~3795~~	~~Copper alloy tubes for plumbing and drainage applications~~
~~4139~~	~~Fibre reinforced concrete pipes and fittings~~
~~4809~~	~~Copper pipe and fittings – Installation and commissioning~~

~~AS/NZS~~

~~1167~~	~~Welding and brazing – Filler metals~~
~~1167.1~~	~~Part 1: Filler metal for brazing and braze welding~~
~~1167.2~~	~~Part 2: Filler metal for welding~~
~~1260~~	~~PVC-U pipes and fittings for drain, waste and vent applications~~
~~1546~~	~~On-site domestic wastewater treatment units~~
~~1546.1~~	~~Part 1: Septic tanks~~
~~1546.2~~	~~Part 2: Waterless composting toilets~~
~~1546.3~~	~~Part 3: Aerated wastewater treatment systems~~
~~2032~~	~~Installation of PVC pipe systems~~
~~2033~~	~~Installation of polyethylene pipe systems~~
~~2280~~	~~Ductile iron pressure pipes and fittings~~
~~2544~~	~~Grey iron pressure fittings~~
~~2648~~	~~Underground marking tape~~
~~2648.1~~	~~Part 1: Non-detectable tape~~
~~2878~~	~~Timbers – Classification into strength groups~~
~~3000~~	~~Electrical installations (known as the Australian/New Zealand Wiring Rules)~~
~~3500~~	~~Plumbing and drainage~~
~~3500.0~~	~~Part 0: Glossary of terms~~
~~3500.1~~	~~Part 1: Water services~~
~~3879~~	~~Solvent cements and priming fluids for PVC (PVC-U and PVC-M) and ABS and ASA pipes and fittings~~
~~4087~~	~~Metallic flanges for waterworks purposes~~
~~4331~~	~~Metallic flanges (series)~~
~~4401~~	~~Plastics piping systems for soil and waste discharge (low and high temperature) inside buildings – Polyethylene (PE)~~
~~4671~~	~~Steel reinforcing materials~~
~~4680~~	~~Hot-dip galvanized (zinc) coatings on fabricated ferrous articles~~
~~4936~~	~~Air admittance valves (AAVs) for use in sanitary plumbing and drainage systems~~
~~4999~~	~~PVC-U maintenance shafts~~
~~5065~~	~~Polyethylene and polypropylene pipes and fittings for drainage and sewerage applications~~
~~7671~~	~~Plastics piping systems for soil and waste discharge (low and high temperature) inside buildings – Polypropylene (PP) (ISO 7671:2003, MOD)~~

~~NZS~~

~~3109~~	~~Specification for concrete construction~~
~~3113~~	~~Specification for chemical admixtures for concrete~~
~~3124~~	~~Specification for concrete construction for minor works~~
~~3640~~	~~Timber-framed buildings~~

~~NZS~~	
~~5807~~	~~Code of practice for industrial identification by colour, wording or other coding~~
~~7643~~	~~Code of practice for the installation of unplasticized PVC pipe systems~~
~~NZS/BS~~	
~~1387~~	~~Specification for screwed and socketed steel tubes and tubulars and for plain end steel tubes suitable for welding or for screwing to BS 21 pipe threads~~
~~BS~~	
~~2598~~	~~Glass plant, pipeline and fittings~~
~~2598-4~~	~~Part 4: Specification for glass plant components~~
~~BS EN~~	
~~295~~	~~Vitrified clay pipe systems for drains and sewers~~
~~295-1~~	~~Requirements for pipes, fittings and joints~~
~~EN~~	
~~10088~~	~~Stainless steels (series)~~
~~ASTM~~	
~~A240/A240M~~	~~Standard Specification for Chromium and Chromium-Nickel Stainless Steel Plate, Sheet, and Strip for Pressure Vessels and for General Applications~~
~~A270~~	~~Standard Specification for Seamless and Welded Austenitic and Ferritic/Austenitic Stainless Steel Sanitary Tubing~~
~~ABCB~~	~~Australian Building Codes Board~~
~~PCA~~	~~National Construction Code, Volume Three – Plumbing Code of Australia~~
~~NZBC~~	~~New Zealand Building Code (G13/AS2, Foul water, acceptable solution)~~
~~WSAA~~	~~Water Services Association of Australia~~
~~WSA 117~~	~~Industry Standard for Acrilonitrile Butadiene Styrene (ABS) Compounds, Pipes and Fittings for Drainage and Sewerage~~

ACCEPTABLE PIPES AND FITTINGS

(Normative)

The following pipes and fittings are deemed to be acceptable solutions subject to the limitations of Clause 2.4:

(a) ABS non-pressure pipe and fittings in accordance with WSA 117.

(b) Cast iron fittings (grey cast iron) in accordance with AS/NZS 2544.

(c) Copper pipes and fittings in accordance with AS 1432 (A, B, C or D) or AS 3501.

(d) Copper alloy pipes in accordance with AS 3795.

(e) Copper and copper alloy fittings in accordance with AS 3688, AS 1589 and AS 3517.

(f) Ductile iron pipes and fittings in accordance with AS/NZS 2280.

(g) Fibre reinforced cement (FRC) pipes and fittings in accordance with AS 4139.

(h) Galvanized steel pipes and fittings in accordance with AS 1074 or NZS/BS 1387.

(i) Glass-filament-reinforced thermosetting plastic (GRP) pipe in accordance with AS 3571.1.

(j) High density polyethylene (PE-HD) pipes and fittings in accordance with AS/NZS 4401 for above ground only or AS/NZS 5065.

(k) High grade, low thermal expansion, borosilicate glass~~ in accordance with BS 2598-4~~.

(l) Polypropylene pipes in accordance with AS/NZS 7671, for above ground use only or AS/NZS 5065.

(m) Stainless steel (SS) pipes and fittings in accordance with ASTM A270/A270M.

(n) Unplasticized polyvinyl chloride (PVC-U) pipes and fittings in accordance with AS/NZS 1260.

(o) Vitrified clay pipes and fittings in accordance with AS 1741 or BS EN 295-1.

APPENDIX B

MAXIMUM LENGTH ~~(m)~~ m OF FIXTURE DISCHARGE PIPE WITHOUT VENTING

(Normative)

Fixture	Floor waste gully	Disconnector gully	Vented drain	Reduced velocity aerated stack system	Fully vented (modified)	Single stack	Single stack (modified)
	~~Ref.~~See Clause 4.6.7.3, Figure 4.6.7.1, Table 4.6.7.2 (see Notes 2 ~~&~~ and 4)	**~~Ref.~~See Clause 4.6, Table 4.6.3**	**~~Ref.~~See Clause 3.9, Figure 3.9.3.2**	**~~Ref.~~See Clause 11.6**	**~~Ref.Clause~~ See Clauses 8.5.7.5.4~~Clause~~, 8.5.7.5.5, Figure 8.5.7.5.4**	**~~Ref.~~See Clause 9.2, Figure 9.2.2, Table 9.5.1**	**~~Ref.~~See Clause 9.2.3, Figure 9.2.3, Table 9.5.1**
AUTOPSY TABLE—shall discharge through a flushing floor waste gully							
Untrapped DN 50 waste to flushing floor waste gully	1.2	NA	NA	NA	NA	NA	NA
Untrapped DN 50 waste to minimum DN 65 flushing floor waste gully	NA	NA	10.0	10.0	2.5	NA	NA
BAIN-MARIE and WATER BOILER							
Untrapped DN 40 waste	1.2	NA	NA	NA	NA	NA	NA
DN 40 Trap and waste	2.5	6.0	NA	NA	NA	NA	NA
DN 40 trap and DN 65 waste	NA	NA	10.0	10.0	2.5	NA	NA
BASIN							
DN 40 trap and waste	2.5	3.5	NA	NA	2.5	2.5	2.5
DN 32 outlet DN 40 trap and waste	2.5	3.5	NA	NA	NA	2.5	2.5
DN 32 trap and DN 40 waste (NZ only)	NA	3.5	NA	NA	NA	2.5	2.5
DN 40 trap and DN 65 waste	NA	10.0	10.0	10.0	10.0	2.5	2.5
DN 32 outlet DN 40 trap and DN 65 waste	NA	10.0	10.0	10.0	10.0	2.5	2.5

(*continued*)

Fixture	Floor waste gully	Disconnector gully	Vented drain	Reduced velocity aerated stack system	Fully vented (modified)	Single stack	Single stack (modified)
	~~Ref.~~See Clause 4.6.7.3, Figure 4.6.7.1, Table 4.6.7.2 (see Notes 2 ~~&~~ and 4)	~~Ref.~~See Clause 4.6, Table 4.6.3	~~Ref.~~See Clause 3.9, Figure 3.9.3.2	~~Ref.~~See Clause 11.6	~~Ref.Clause~~ See Clauses 8.5.7.5.4~~Clause~~, 8.5.7.5.5, Figure 8.5.7.5.4	~~Ref.~~See Clause 9.2, Figure 9.2.2, Table 9.5.1	~~Ref.~~See Clause 9.2.3, Figure 9.2.3, Table 9.5.1
BATH							
Untrapped DN 40 waste	1.2	NA	N~~NA~~A	N~~NA~~A	NA	NA	NA
DN 40/50 trap and waste	~~2.5~~2.5	~~6.0~~6.0	NA 10.0	NA 10.0	2.5	2.5	2.5
DN ~~50 trap and waste (NZ only)DN~~ 40/50 trap and DN 65 waste	NA	10.0			2.5~~NA~~	2.5~~NA~~	2.5~~NA~~
BEDPAN and WASHER/STERILIZER							
DN 80 trap and waste	NA	NA	10.0	10.0	2.5	NA	NA
DN 100 trap and waste	NA	NA	10.0	10.0	6.0	NA	NA
BIDETTE/BIDET							
Untrapped DN 40 waste	1.2	NA	NA	NA	NA	NA	NA
DN 40 trap and waste	2.5	3.5	NA	NA	2.5	2.5	2.5
DN 32 outlet DN 40 trap and waste	2.5	3.5	NA	NA	2.5	2.5	2.5
DN 32 trap and DN 40 waste (NZ only)	NA	3.5	NA	NA	2.5	2.5	2.5
DN 40 trap and DN 65 waste	NA	10.0	10.0	10.0	2.5	2.5	2.5
DN 32 outlet DN 40 trap and DN 65 waste	NA	10.0	10.0	10.0	2.5	2.5	2.5
DENTAL UNITS Cuspidors DN 25 or DN 40 untrapped waste							
To sealed trap not smaller than DN 40	NA	6.0	NA	NA	NA	NA	NA
Evacuators (trapped tundish)	2.5	NA	NA	NA	NA	NA	NA
DN 40 trap and waste	1.2	6.0	NA	10.0	2.5	2.5	2.5
DN 25, DN 32 and DN 40 trap and waste (NZ only)	2.5	3.5	NA	NA	NA	NA	NA
DN 40 trap and DN 65 waste	NA	10.0	10.0	10.0	2.5	NA	NA
DRINKING FOUNTAINS and BUBBLERS							
DN 40 trap and waste	2.5	6.0	NA	NA	2.5	2.5	2.5
DN 25 and DN 32 trap and waste (NZ only)	2.5	3.5	NA	NA	NA	NA	NA
DN 40 trap and DN 65 waste	NA	10.0	10.0	10.0	2.5	2.5	2.5

(*continued*)

Reference copy

Fixture	Floor waste gully	Disconnector gully	Vented drain	Reduced velocity aerated stack system	Fully vented (modified)	Single stack	Single stack (modified)
	~~Ref.~~See Clause 4.6.7.3, Figure 4.6.7.1, Table 4.6.7.2 (see Notes 2 ~~&~~ and 4)	~~Ref.~~See Clause 4.6, Table 4.6.3	~~Ref.~~See Clause 3.9, Figure 3.9.3.2	~~Ref.~~See Clause 11.6	~~Ref.Clause~~ See Clauses 8.5.7.5.4~~Clause~~, 8.5.7.5.5, Figure 8.5.7.5.4	~~Ref.~~See Clause 9.2, Figure 9.2.2, Table 9.5.1	~~Ref.~~See Clause 9.2.3, Figure 9.2.3, Table 9.5.1
DISPOSAL UNITS							
Domestic food waste							
DN 40 trap and waste (NZ only)	NA	6.0	NA	NA	2.5	NA	NA
DN 50 trap and waste (Australia only)	NA	6.0	NA	NA	2.5	NA	NA
DN 50 trap and waste (NZ only)	NA	10.0	NA	NA	2.5	NA	NA
DN 50 trap and DN 65 waste	NA	10.0	10.0	10.0	2.5	NA	NA
Commercial food waste							
DN 50 trap and waste	NA	6.0	NA	NA	2.5	NA	NA
DN 50 trap and DN 65 waste	NA	10.0	10.0	10.0	2.5	NA	NA
Sanitary napkin							
DN 50 trap and DN 65 waste	NA	NA	10.0	10.0	2.5	NA	NA
DISCONNECTOR GULLY TRAPS							
DN 100 outlet	NA	NA	10.0	10.0	6.0	NA	NA
FLOOR WASTE GULLY TRAPS							
DN 50 outlet	NA	6.0	NA	NA	2.5	2.5	2.5
DN 65/80 outlet	NA	10.0	10.0	10.0	2.5	2.5	2.5
DN 100 outlet	NA	10.0	10.0	10.0	6.0	6.0	6.0
SHOWERS 80/100 mm grates							
Untrapped DN 40 waste	1.2	NA	NA	NA	NA	NA	NA
DN 40/50 trap and waste	2.5	6.0	NA	NA	2.5	2.5	2.5
DN 40/50 trap and DN 65 waste	NA	10.0	10.0	10.0	2.5	2.5	2.5
2–3 showers to graded channel with DN 50 trap and waste	NA	6.0	NA	NA	2.5	NA	NA
4–6 showers to graded channel with DN 65 trap and waste	NA	10.0	10.0	10.0	2.5	NA	NA

(*continued*)

Reference copy

Fixture	Floor waste gully	Disconnector gully	Vented drain	Reduced velocity aerated stack system	Fully vented (modified)	Single stack	Single stack (modified)
	~~Ref.~~See Clause 4.6.7.3, Figure 4.6.7.1, Table 4.6.7.2 (see Notes 2 ~~&~~ and 4)	~~Ref.~~See Clause 4.6, Table 4.6.3	~~Ref.~~See Clause 3.9, Figure 3.9.3.2	~~Ref.~~See Clause 11.6	~~Ref.Clause~~ See Clauses 8.5.7.5.4~~Clause~~, 8.5.7.5.5, Figure 8.5.7.5.4	~~Ref.~~See Clause 9.2, Figure 9.2.2, Table 9.5.1	~~Ref.~~See Clause 9.2.3, Figure 9.2.3, Table 9.5.1
SINKS							
Kitchen							
Untrapped DN 40 waste	NA	NA	NA	NA	NA	NA	NA
DN 40 trap and waste (NZ only)	NA	6.0	NA	NA	2.5	2.5	2.5
DN 50 trap and waste	NA	6.0	NA	NA	2.5	2.5	2.5
DN 40 trap and DN 65 waste (NZ only)	NA	10.0	10.0	10.0	2.5	2.5	2.5
DN 50 trap and DN 65 waste	NA	10.0	10.0	10.0	2.5	2.5	2.5
Bar (domestic)							
Untrapped DN 40 waste	1.2	NA	NA	NA	NA	NA	NA
DN 40 trap and waste	2.5	6.0	NA	NA	2.5	2.5	2.5
DN 40 trap and DN 65 waste	NA	10.0	10.0	10.0	2.5	NP	NA
Bar (commercial)							
Untrapped DN 50 waste	1.2	NA	NA	NA	NA	NA	NA
DN 50 trap and waste	2.5	6.0	NA	10.0	2.5	NA	NA
DN 50 trap and DN 65 waste	NA	10.0	10.0	10.0	2.5	NA	NA
(Cleaner's)							
Untrapped DN 40 waste (NZ only)	1.2	NA	NA	NA	NA	NA	NA
Untrapped DN 50 waste	1.2	NA	NA	NA	NA	NA	NA
DN 40 trap and waste (NZ only)	2.5	6.0	NA	NA	2.5	2.5	2.5
DN 50 trap and waste	2.5	6.0	NA	NA	2.5	2.5	2.5
DN 40 trap and DN 65 waste (NZ only)	NA	10.0	10.0	10.0	2.5	2.5	2.5
DN 50 trap and DN 65 waste	NA	10.0	10.0	10.0	2.5	2.5	2.5
Pot or utility							
DN 50 trap and waste	NA	6.0	NA	NA	2.5	NA	NA
DN 50 trap and DN 65 waste	NA	10.0	10.0	10.0	2.5	NA	NA

(*continued*)

Reference copy

Fixture	Floor waste gully	Disconnector gully	Vented drain	Reduced velocity aerated stack system	Fully vented (modified)	Single stack	Single stack (modified)
	~~Ref.~~See Clause 4.6.7.3, Figure 4.6.7.1, Table 4.6.7.2 (see Notes 2 ~~&~~ and 4)	~~Ref.~~See Clause 4.6, Table 4.6.3	~~Ref.~~See Clause 3.9, Figure 3.9.3.2	~~Ref.~~See Clause 11.6	~~Ref.Clause~~ See Clauses 8.5.7.5.4~~Clause~~, 8.5.7.5.5, Figure 8.5.7.5.4	~~Ref.~~See Clause 9.2, Figure 9.2.2, Table 9.5.1	~~Ref.~~See Clause 9.2.3, Figure 9.2.3, Table 9.5.1
Laboratory							
DN 50 trap and waste	NA	6.0	NA	NA	2.5	NA	NA
DN 50 trap and DN 65 waste	NA	10.0	10.0	10.0	2.5	NA	NA
SLOP HOPPER							
DN 100 trap and waste	NA	NA	10.0	10.0	6.0	NA	NA
SWIMMING POOLS							
Limits determined by network utility operator (see Note 5)							
DN 40 waste	NA	Unlimited	NA	NA	NA	NA	NA
TROUGHS							
Ablution							
Untrapped DN 40 waste	1.2	NA	NA	NA	NA	NA	NA
Untrapped DN 50 waste	1.2	NA	NA	NA	NA	NA	NA
DN 40 trap and waste	2.5	6.0	NA	NA	2.5	NA	NA
DN 50 trap and waste	2.5	6.0	NA	NA	2.5	NA	NA
DN 40 trap and DN 65 waste	NA	10.0	10.0	10.0	2.5	NA	NA
DN 50 trap and DN 65 waste	NA	10.0	10.0	10.0	2.5	NA	NA
Laundry							
Untrapped DN 40 waste	1.2	NA	NA	NA	NA	NA	NA
Untrapped DN 50 waste	1.2	NA	NA	NA	NA	NA	NA
DN 40 trap and waste	2.5	6.0	NA	NA	2.5	2.5	2.5
DN 50 trap and waste	2.5	6.0	NA	NA	2.5	2.5	2.5
DN 40 trap and DN 65 waste	NA	10.0	10.0	10.0	2.5	2.5	2.5
DN 50 trap and DN 65 waste	NA	10.0	10.0	10.0	2.5	2.5	2.5

(*continued*)

Reference copy

Fixture	Floor waste gully	Disconnector gully	Vented drain	Reduced velocity aerated stack system	Fully vented (modified)	Single stack	Single stack (modified)
	~~Ref.~~See Clause 4.6.7.3, Figure 4.6.7.1, Table 4.6.7.2 (see Notes 2 ~~&~~ and 4)	~~Ref.~~See Clause 4.6, Table 4.6.3	~~Ref.~~See Clause 3.9, Figure 3.9.3.2	~~Ref.~~See Clause 11.6	~~Ref. Clause~~ See Clauses 8.5.7.5.4~~Clause~~, 8.5.7.5.5, Figure 8.5.7.5.4	~~Ref.~~See Clause 9.2, Figure 9.2.2, Table 9.5.1	~~Ref.~~See Clause 9.2.3, Figure 9.2.3, Table 9.5.1
URINALS							
Wall hung							
DN 40 trap and waste	NA	NA	NA	NA	2.5	2.5	2.5
DN 50 trap and waste	NA	NA	NA	NA	2.5	2.5	2.5
DN 40 trap and DN 65 waste	NA	NA	10.0	10.0	2.5	2.5	2.5
DN 50 trap and DN 65 waste	NA	NA	10.0	10.0	2.5	2.5	2.5
Slab (see Note 8)							
Up to 5 m in length minimum DN 65 trap and waste (see Note 6)	NA	NA	10.0	10.0	2.5	NA	NA
Waterless ~~Urinals~~ urinals (see Clause 11.24.2.3)							
DN 40 trap and DN 65 waste	NA	NA	10.0	10.0	2.5	2.5	2.5
DN 50 trap and DN 65 waste	NA	NA	10.0	10.0	2.5	2.5	2.5
WASHING MACHINES (Domestic clothes) hose connecting to:							
Untrapped DN 40 waste	1.2	NA	NA	NA	NA	NA	NA
Untrapped DN 50 waste	1.2	NA	NA	NA	NA	NA	NA
DN 40 trap and waste	2.5	6.0	NA	NA	2.5	2.5	2.5
DN 50 trap and waste	2.5	6.0	NA	NA	2.5	2.5	2.5
DN 40 trap and DN 65 waste	NA	10.0	10.0	10.0	2.5	2.5	2.5
DN 50 trap and DN 65 waste	NA	10.0	10.0	10.0	2.5	2.5	2.5

(*continued*)

Reference copy

Fixture	Floor waste gully	Disconnector gully	Vented drain	Reduced velocity aerated stack system	Fully vented (modified)	Single stack	Single stack (modified)
	~~Ref.~~See Clause 4.6.7.3, Figure 4.6.7.1, Table 4.6.7.2 (see Notes 2 ~~&~~ and 4)	~~Ref.~~See Clause 4.6, Table 4.6.3	~~Ref.~~See Clause 3.9, Figure 3.9.3.2	~~Ref.~~See Clause 11.6	~~Ref.Clause~~ See Clauses 8.5.7.5.4~~Clause~~, 8.5.7.5.5, Figure 8.5.7.5.4	~~Ref.~~See Clause 9.2, Figure 9.2.2, Table 9.5.1	~~Ref.~~See Clause 9.2.3, Figure 9.2.3, Table 9.5.1
Commercial clothes laundrette							
Untrapped DN 50 waste	NA	NA	NA	NA	NA	NA	NA
DN 50 trap and waste	NA	6.0	NA	NA	2.5	NA	NA
DN 50 trap and DN 65 waste	NA	10.0	10.0	10.0	2.5	NA	NA
Industrial laundry							
To graded channel and 225 mm silt trap with DN 100 outlet	NA	10.0	NA	NA	NA	NA	NA
(Domestic dishwasher) waste outlet hose connecting to riser of kitchen sink trap—							
Above the water seal of a DN 50 trap and waste	NA	6.0	NA	NA	2.5	2.5	2.5
DN 40 trap and waste	NA	6.0	NA	NA	2.5	2.5	2.5
DN 40 trap and DN 65 waste	NA	10.0	10.0	10.0	2.5	2.5	2.5
Commercial dishwasher (see Note 5)	NP	10.0	NA	NA	NA	NA	NA
Glass							
Untrapped DN 50 waste	1.2	NA	NA	NA	NA	NA	NA
DN 50 trap and waste	2.5	6.0	NA	NA	2.5	NA	NA
DN 50 trap and DN 65 waste	NA	10.0	10.0	10.0	2.5	NA	NA
COMBINATION PAN ROOM SINK							
DN 100 outlet	NA	NA	10.0	10.0	6.0	NA	NA

(*continued*)

Reference copy

Fixture	Floor waste gully	Disconnector gully	Vented drain	Reduced velocity aerated stack system	Fully vented (modified)	Single stack	Single stack (modified)
	~~Ref.~~See Clause 4.6.7.3, Figure 4.6.7.1, Table 4.6.7.2 (see Notes 2 ~~&~~ and 4)	~~Ref.~~See Clause 4.6, Table 4.6.3	~~Ref.~~See Clause 3.9, Figure 3.9.3.2	~~Ref.~~See Clause 11.6	~~Ref.Clause~~ See Clauses 8.5.7.5.4~~Clause~~, 8.5.7.5.5, Figure 8.5.7.5.4	~~Ref.~~See Clause 9.2, Figure 9.2.2, Table 9.5.1	~~Ref.~~See Clause 9.2.3, Figure 9.2.3, Table 9.5.1
POTATO PEELER—shall discharge through a peel trap							
DN 50 trap and waste	NA	6.0	NA	NA	2.5	NA	NA
DN 50 trap and DN 65 waste	NA	10.0	10.0	10.0	2.5	NA	NA
RANGES OF FIXTURES (see Note 6)							
5 × basins DN 40 traps and wastes connected to a DN 50 common discharge pipe	NA	NA	NA	NA	NA	4.5	4.5
5 × water closets DN 100 outlets connected to a DN 100 common discharge pipe	NA	NA	NA	10.0	NA	10.0	10.0
5 × wall-hung urinals DN 50 traps connected to a DN 65 common discharge pipe	NA	NA	NA	10.0	NA	10.0	10.0
REFRIGERATED CABINETS and STERILIZERS							
Untrapped minimum DN 40 waste	1.2	NA	NA	NA	NA	NA	NA
Minimum DN 40 ~~Trap~~ trap and waste	2.5	6.0	NA	NA	2.5	NA	NA
DN 40 trap and DN 65 waste	NA	10.0	10.0	10.0	2.5	NA	NA
STERILIZERS							
Untrapped minimum DN 40 waste	1.2	NA	NA	NA	NA	NA	NA
Minimum DN 40 trap and waste	2.5	6.0	NA	NA	2.5	NA	NA
DN 40 trap and DN 65 waste	NA	10.0	10.0	10.0	2.5	NA	NA

(*continued*)

Reference copy

Fixture	Floor waste gully	Disconnector gully	Vented drain	Reduced velocity aerated stack system	Fully vented (modified)	Single stack	Single stack (modified)
	~~Ref.~~See Clause 4.6.7.3, Figure 4.6.7.1, Table 4.6.7.2 (see Notes 2 ~~&~~ and 4)	~~Ref.~~See Clause 4.6, Table 4.6.3	~~Ref.~~See Clause 3.9, Figure 3.9.3.2	~~Ref.~~See Clause 11.6	~~Ref. Clause~~ See Clauses 8.5.7.5.4~~Clause~~, 8.5.7.5.5, Figure 8.5.7.5.4	~~Ref.~~See Clause 9.2, Figure 9.2.2, Table 9.5.1	~~Ref.~~See Clause 9.2.3, Figure 9.2.3, Table 9.5.1
TUNDISHES (minor discharge)							
Untrapped DN 25 to DN 50 waste	10.0	NA	NA	NA	NA	NA	NA
DN 40 trap and waste	10.0	6.0	NA	NA	2.5	2.5	2.5
DN 40 trap and DN 65 waste	10.0	10.0	10.0	10.0	2.5	2.5	2.5
WATER CLOSET PAN							
DN 100 outlet	NA	NA	10.0	10.0	6.0	6.0	6.0
WOK BURNERS (Approx. 1 fixture unit per burner) (see Note 5)							
Minimum DN 50 trap and waste	NA	6.0	NA	NA	NA	NA	NA
DN 50 trap and DN 65 waste	NA	10.0	10.0	10.0	2.5	NA	NA
COMBINATION OVENS ~~&~~ and STEAMERS (see Notes 5 and 7)							
DN 50 trap and waste	NA	6.0	NA	NA	NA	NA	NA
DN 50 trap and DN 65 waste	NA	10.0	10.0	10.0	2.5	NA	NA

LEGEND:
NA = Not allowed

NOTES:

1 For the topmost fixture to fully vented modified stacks, see Clause ~~7.5.1.2~~8.5.1.2.

2 Waste pipes to floor waste gullies shall not be extended by venting.

3 'Minor discharge', approximately a minimum of 1 L per day and not more than 20 L per day.

4 For submerged-inlet floor waste gullies the requirements are specified in Table 4.6.7.2.

5 For connections of fixtures in range, see Clause ~~8.5.10~~9.5.10.

6 Over 5 m of urinal wall additional outlets required.

7 Discharge through a DN 100 tundish.

8 See Clause ~~8.4.2~~9.4.2, Item (a) for connection of slab type urinals to single stacks.

Reference copy

APPENDIX C

PIPE GRADES CONVERSION TABLE

(Informative)

Conversion of pipe grades	
Percentage~~, %~~ (%)	**Ratio (gradient)**
20.00	1 in 5
6.65	1 in 15
5.00	1 in 20
3.35	1 in 30
2.50	1 in 40
2.00	1 in 50
1.65	1 in 60
1.45	1 in 70
1.25	1 in 80
1.10	1 in 90
1.00	1 in 100
0.85	1 in 120
0.70	1 in 140
0.65	1 in 150
0.60	1 in 160
0.50	1 in 200
0.40	1 in 250
0.35	1 in 300

NOTE: The percentage figures have been rounded off to the nearest 0.05%.

APPENDIX D

CONDUCT OF INSPECTIONS BY THE USE OF CLOSED CIRCUIT TELEVISION (CCTV)

(Informative)

D1 GENERAL

CCTV inspections are effective ways to identify the structural condition of sanitary plumbing and drainage installations and to identify and report on any specific defects or features.

Inspections should be conducted under no-flow conditions~~; that is~~ , i.e. the sanitary plumbing system is not being used so that the flow (water) level may be measured and reported.

Typical applications for CCTV surveys include—

(a) inspection of drains, sewers and pipelines;

(b) inspection of deep shafts;

(c) inspection of ducts;

(d) monitoring specialist repair works in sewers; and

(e) surveys of industrial process pipelines.

Where required, specialized instruments, apparatus and/or software should be used to facilitate the survey. Hardware and software used in measuring the parameters have to be correctly calibrated for each application using the manufacturer's recommended methods.

NOTE: It is recommended that CCTV operators are trained to conduct CCTV inspections and investigations.

D2 ~~OPERATORS~~ OPERATOR'S REPORT

The operator should provide a written report.

The report should contain, but not be limited to, the following:

(a) Location of the sanitary plumbing and drainage installation.

(b) The date(s) of inspections.

(c) Details as required, to identify the drain(s) inspected.

(d) Size and type of material installed.

(e) Condition of the sanitary plumbing and drainage installation including the location and characteristics of reportable features such as defects.

(f) Where required, a determination for acceptance.

APPENDIX E

CLASSIFICATION OF SOILS

(Informative)

Sanitary plumbing and drainage systems are required to be designed and installed to avoid the likelihood of damage from ground movement. AS 2870 the Standard for Residential Slabs and Footings places emphasis on design for reactive soil sites susceptible to ground movement due to moisture changes. It takes into account—

(a) swelling and shrinkage movements of reactive soils due to moisture changes;

(b) settlement of compressible soils or fill;

(c) distribution to the foundation of the applied loads; and

(d) tolerance of the superstructure and services to movement.

AS 2870 provides for the classification of the building sites and the design of footing systems. It requires all sites to be classified with respect to soil movement. The site classifications are contained within this Standard.

The site classifications M, M-D, H1, H1-D, H2, H2-D, E and E-D are for moderately, highly and extremely reactive soils.

Classes A and S are considered to not be problematic.

Plumbing and drainage requirements for P classified sites should be determined by a suitably qualified and experienced expert.

APPENDIX F

SIZING VACUUM DRAINAGE PIPES AND BUFFERS

(Normative)

F1 GENERAL

The following sizing methods given in this Appendix in Tables F1 to F4 shall be used for buffer and pipe sizing.

TABLE F1

MAXIMUM INFLOW (L/s) TO A SINGLE VACUUM BUFFER

Buffer volume L	Maximum inflow L/s
5	0.25
10	1.25
20	2.5
50	3.5
100	4.5

NOTE: For a bath, a laundry tub, a sink or similar appliance the average discharge rate in L/s at which the appliance will empty should be determined to calculate the buffer size. This will typically be the rate of discharge when a drain plug is removed from a full appliance. This can be calculated by dividing the volume (L) by the total number of seconds taken to empty the full appliance with waste outlet fitted.

TABLE F2

VACUUM LOADING UNITS (VLU)

Vacuum fixture	Vacuum loading units (VLU)
5 L buffer	4
10 L buffer	8
20 L buffer	12
50 L buffer	25
100 L buffer	60
Vacuum water closet pan	4
Vacuum bedpan washer	4
Vacuum slop hopper	4

TABLE F3

MAINS AND BRANCH LINES SIZING

Nominal size of vacuum pipeline DN	Maximum vacuum loading units (VLU)
50	100
65	400
80	600
100	1 200
150	7 000
200	20 000

TABLE F4

MAXIMUM NUMBER OF VACUUM TOILETS CONNECTED TO MAIN AND BRANCH PIPELINES

Nominal size of vacuum pipeline DN	Maximum vacuum loading units (VLU)
50	25
65	100
80	125
100	225
150	500
200	1500

APPENDIX G

RENOVATION OF SANITARY PLUMBING AND DRAINAGE SYSTEMS USING STRUCTURAL PLASTICS LINERS

(Normative)

G1 GENERAL

Renovation of sanitary plumbing and drainage systems using cured-in-place pipe (CIPP) liners (see Clause 3.16.3.1) and other structural plastics liners (see Clause 3.16.3.2) can be performed on complete systems or as a repair of a section. The repair shall extend a minimum of 400 mm beyond the damaged section of pipe in both directions with the minimum repair length to be 800 mm. Where a junction is within the repair length, all arms of the junction shall be included in the repair (see Figure G1).

NOTES:

1 A structural plastics liner may bridge a gap caused by damage to an existing pipeline.

2 The internal diameter of the host pipe will be reduced by twice the wall thickness of the liner. It may be necessary to consider the affect this has on the hydraulic capacity of the piping system, especially for very small diameter pipes.

3 There may be limitations on the use of some lining materials in trade waste applications.

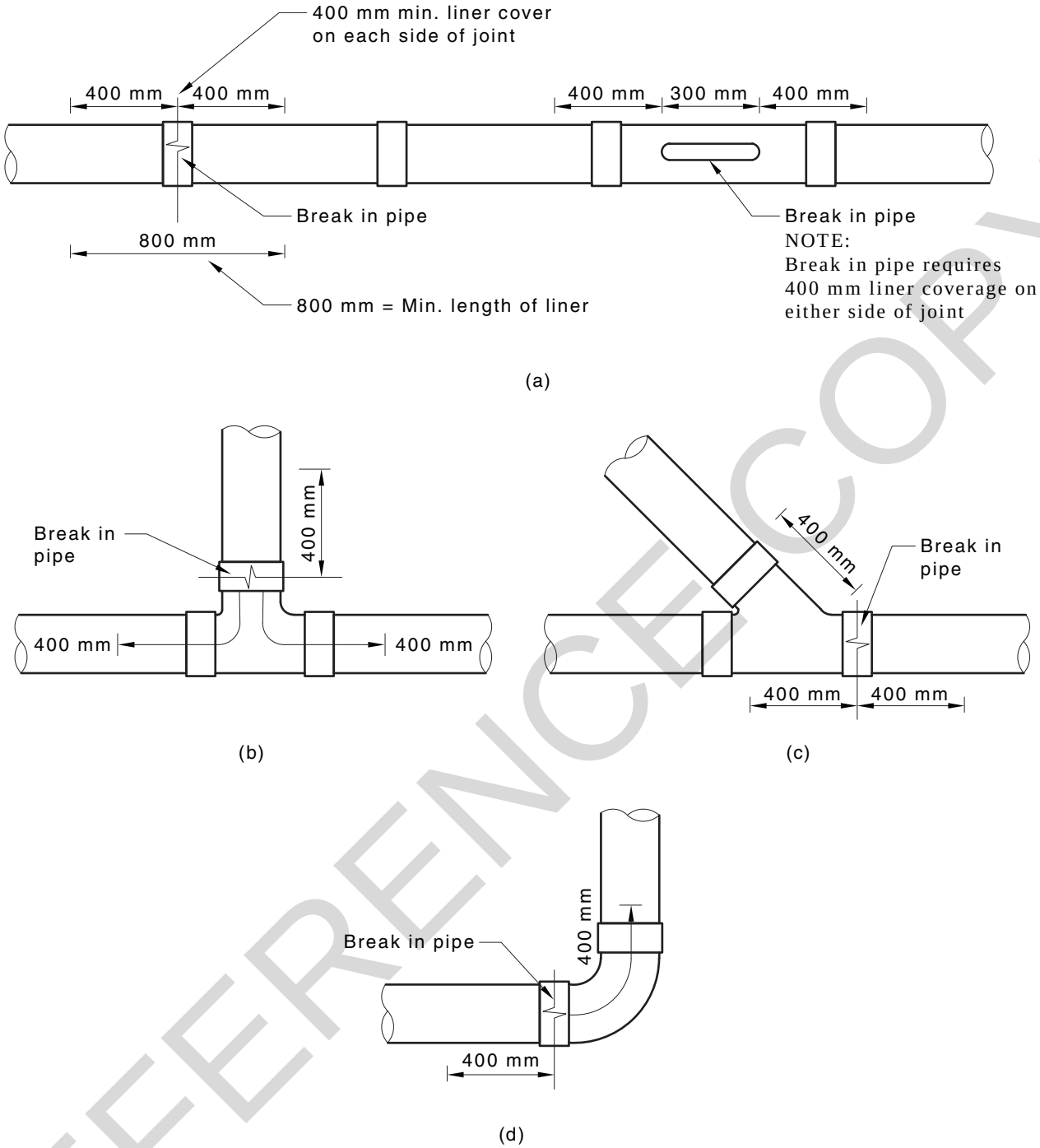

FIGURE G1 MINIMUM LENGTH OF LINER FOR A DAMAGED PIPE OR FITTING

G2 LINER

CIPP liners shall conform with WMTS-518.

When measured in accordance with ISO 7685 for thermosets (CIPP), or with ISO 9969 for thermoplastics, the minimum ring stiffness of an unsupported structural liner for below ground applications shall be 4 kN/m/m. For above ground applications the minimum pipe stiffness of the unsupported liner shall be in accordance with the appropriate product specification.

G3 RELINING PROCEDURE

The pipe system shall be prepared for relining as follows:

(a) A CCTV inspection shall be performed to determine whether the pipe system is in a condition suitable for renovation and to identify the location of all relevant junctions.

(b) The pipe system shall be cleaned with a high pressure jetter.

(c) When the renovation is to be performed using a CIPP liner, the internal surface of non-porous host pipes (e.g. PVC or PE) shall be roughened or mechanically etched using sanding discs or wire brushes.

(d) The system shall be flushed to remove any debris.

(e) A second CCTV inspection shall be undertaken to ensure the pipe system is ready for the liner to be installed.

(f) Insert the liner.

(g) For CIPP liners, the resin shall be cured (i.e. cross-linked) by heat, U.V. radiation, ambient temperature or other means.

(h) For liners other than CIPP, the ends of the liner shall be anchored and sealed in such a way as to provide a watertight connection to the existing pipeline. The method of anchoring the pipe ends shall take account of the residual effects of installation, especially unrelieved winching and thermal stresses, and be capable of resisting the associated longitudinal forces without movement, i.e. contraction.

(i) A third CCTV inspection shall be performed to ensure the liner has been correctly installed.

(j) Reinstate the laterals by opening to the full internal diameter of the lateral. Alternatively, install a one piece lateral junction liner.

(k) Flush the renovated pipe system.

(l) A fourth CCTV inspection shall be performed to confirm the integrity of the renovation and satisfactory condition of all laterals.

NOTE: Testing in accordance with Section 15 should be undertaken particularly in major or complete system renovations.

BIBLIOGRAPHY

AS

1428 Design for access and mobility (series)

2870 Residential slabs and footings

NZS

4404 Land development and subdivision ~~on~~ infrastructure

~~Sewerage Code of Australia~~SA TS

100 Vacuum WC pans and interface valves intended for use with vacuum drainage systems and designs

ISO

11295 Classification and information on design of plastics piping systems used for renovation

11296 Plastics piping systems for renovation of underground non-pressure drainage and sewerage networks

11296-1 Part 1: General

11296-2 Part 2: Lining with continuous pipes

DRAFTING NOTE: ISO 11296-2 is currently under development. This document will be publicly available in the near future.

WSAA Water Services Association of Australia

WSA 02 Sewerage Code of Australia

*** END OF DRAFT ***

PREPARATION OF JOINT AUSTRALIAN/NEW ZEALAND STANDARDS

Joint Australian/New Zealand Standards are prepared by a consensus process involving representatives nominated by organizations in both countries drawn from all major interests associated with the subject. Australian/New Zealand Standards may be derived from existing industry Standards, from established international Standards and practices or may be developed within a Standards Australia, Standards New Zealand or joint technical committee.

During the development process, Australian/New Zealand Standards are made available in draft form from the publisher the publisher SAI Global at http://www.saiglobal.com and Standards New Zealand at www.standards.govt.nz

Standards are made available for comment so that all interests concerned with the application of a proposed Standard are given the opportunity to submit views on the requirements to be included. Comment submitted on this draft Australian/New Zealand Standard will be considered a future Joint Technical Committee composed of major interests associated with the subject.

The following interests are represented on the committee responsible for this draft Australian/ New Zealand Standard:

Association of Hydraulic Services Consultants Australia

Australian Building Codes Board

Australian Industry Group

Australian Stainless Steel Development Association

International Copper Association Australia

Master Plumbers Australia

Master Plumbers, Gasfitters and Drainlayers New Zealand

Plastics Industry Pipe Association of Australia

Plastics New Zealand

Plumbers, Gasfitters and Drainlayers Board, New Zealand

Plumbing Distributors Association of New Zealand

Plumbing Products Industry Group

Water New Zealand

Standards Australia

Standards Australia is an independent company, limited by guarantee, which prepares and publishes most of the voluntary technical and commercial standards used in Australia. These standards are developed through an open process of consultation and consensus, in which all interested parties are invited to participate. Through a Memorandum of Understanding with the Commonwealth government, Standards Australia is recognized as Australia's peak national standards body.

Standards New Zealand

The first national Standards organization was created in New Zealand in 1932. The New Zealand Standards Executive is established under the Standards and Accreditation Act 2015 and is the national body responsible for the production of Standards.

Australian/New Zealand Standards

Under a Memorandum of Understanding between Standards Australia and Standards New Zealand, Australian/New Zealand Standards are prepared by committees of experts from industry, governments, consumers and other sectors. The requirements or recommendations contained in published Standards are a consensus of the views of representative interests and also take account of comments received from other sources. They reflect the latest scientific and industry experience. Australian/New Zealand Standards are kept under continuous review after publication and are updated regularly to take account of changing technology.

International Involvement

Standards Australia and Standards New Zealand are responsible for ensuring that the Australian and New Zealand viewpoints are considered in the formulation of international Standards and that the latest international experience is incorporated in national and Joint Standards. This role is vital in assisting local industry to compete in international markets. Both organizations are the national members of ISO (the International Organization for Standardization) and IEC (the International Electrotechnical Commission).

Visit our web sites

www.standards.org.au www.standards.govt.nz